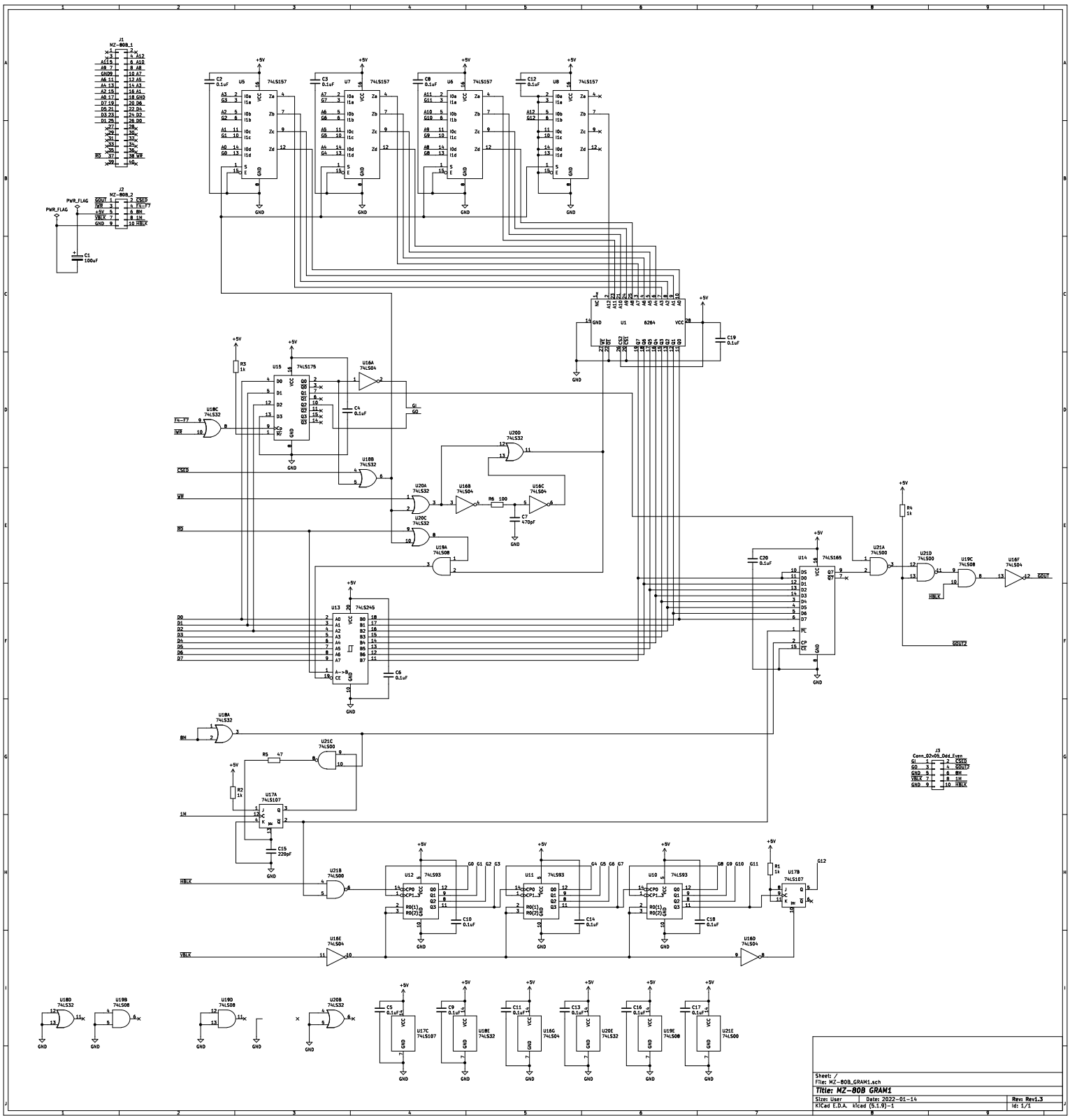
J1
MZ-80B_1
J2
MZ-80B_2
PWR_FLAG
C1 100uF
U5 74LS157
U7 74LS157
U6 74LS157
U8 74LS157
U1 8264
U15 74LS175
U16A 74LS04
U18C 74LS32
U18B 74LS32
U20D 74LS32
U20A 74LS32
U20C 74LS32
U16B 74LS04
U16C 74LS04
R6 100
C7 470pF
U19A 74LS08
U13 74LS245
U14 74LS165
U21A 74LS00
U21D 74LS00
U19C 74LS08
U16F 74LS04
U18A 74LS32
U21C 74LS00
R5 47
U17A 74LS107
C15 220pF
U21B 74LS00
U12 74LS593
U11 74LS593
U10 74LS593
U17B 74LS107
U16E 74LS04
U16D 74LS04
J3
Conn_02x05_Odd_Even
U18D 74LS32
U19B 74LS08
U19D 74LS08
U20B 74LS32
U17C 74LS107
U18E 74LS32
U16G 74LS04
U20E 74LS32
U19E 74LS08
U21E 74LS00
Sheet: /
File: MZ-80B_GRAM1.sch
Title: MZ-80B GRAM1
Size: User
Date: 2022-01-14
Rev: Rev1.3
KiCad E.D.A. kicad (5.1.9)-1
Id: 1/1