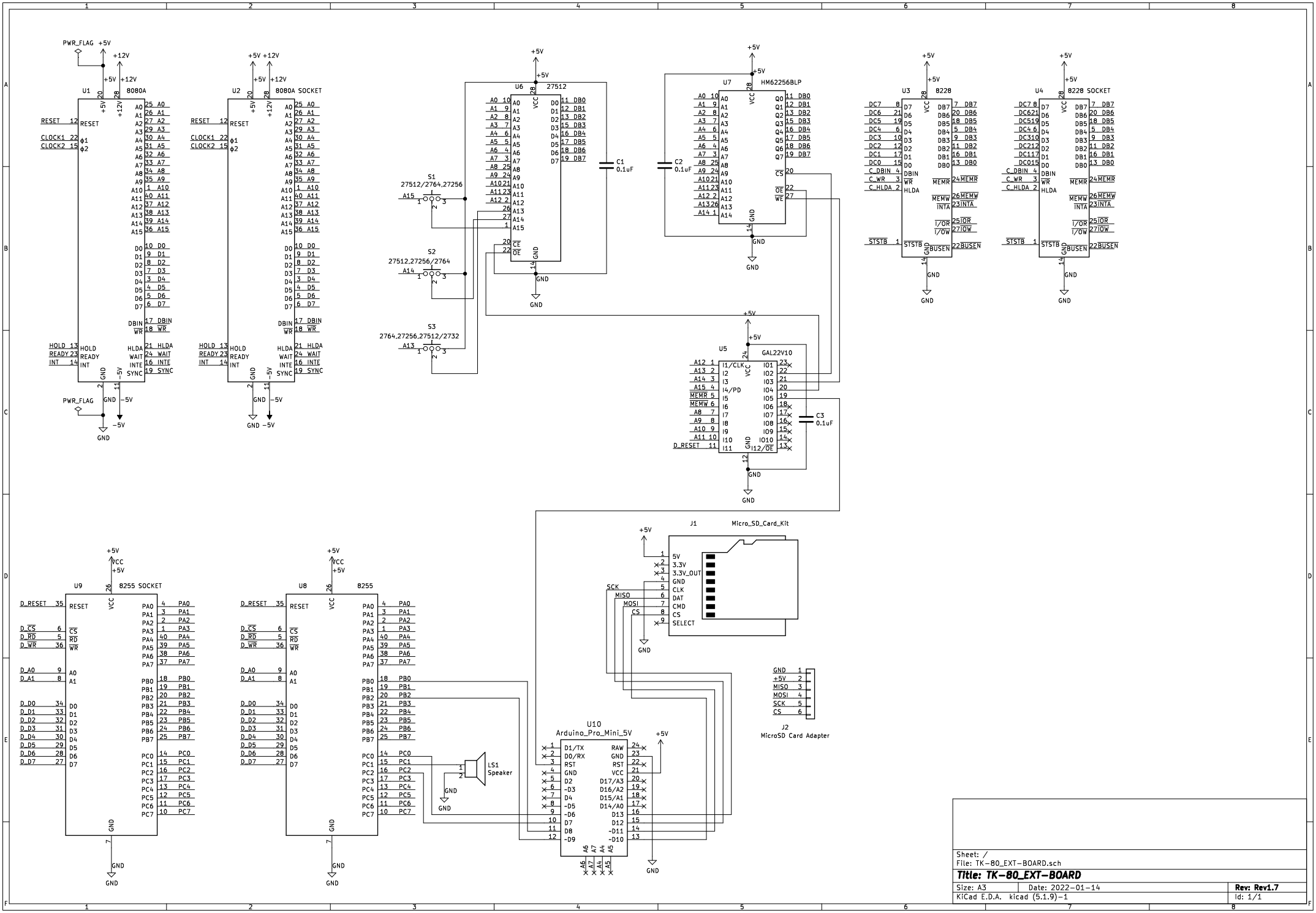
U1 8080A
U2 8080A SOCKET
U6 27512
U7 HM62256BLP
U3 8228
U4 8228 SOCKET
U5 GAL22V10
S1 27512/2764,27256
S2 27512,27256/2764
S3 2764,27256,27512/2732
C1 0.1uF
C2 0.1uF
C3 0.1uF
U9 8255 SOCKET
U8 8255
U10 Arduino_Pro_Mini_5V
LS1 Speaker
J1 Micro_SD_Card_Kit
J2 MicroSD Card Adapter
PWR_FLAG
+5V
+12V
-5V
GND
Sheet: /
File: TK-80_EXT-BOARD.sch
Title: TK-80_EXT-BOARD
Size: A3
Date: 2022-01-14
Rev: Rev1.7
KiCad E.D.A. kicad (5.1.9)-1
Id: 1/1