This article has been accepted for inclusion in a future issue of this journal. Content is final as presented, with the exception of pagination.

Assessing AI-Generated Image Quality Using a Cross-Modal Hierarchical Perception Network

Zhaoqing Pan, *Senior Member, IEEE*, Yi Yang, Feng Yuan, Haoran Xie, *Senior Member, IEEE*, Fu Lee Wang, *Senior Member, IEEE*, and Sam Kwong, *Fellow, IEEE*

***Abstract*—AI-Generated Images (AGIs) are increasingly used in various multimedia applications, making it essential to accurately assess the quality of AGIs to enhance user experience and optimize generative models. However, existing AI-Generated Image Quality Assessment (AGIQA) methods struggle to align fine-grained cross-modal semantics or capture diverse quality factors across multiple perceptual levels, limiting their effectiveness. To address these limitations, a Cross-modal Hierarchical Perception Network (CHPNet) is proposed for AGIQA, which simulates the hierarchical visual perception and adaptive decision-making mechanisms of the human brain. The proposed CHPNet comprises two key components: a Multi-level Cross-modal Interaction Network (MCINet) and an Adaptive Hierarchical Scoring Network (AHSNet). The MCINet is designed to generate multi-level quality-aware features by aligning and fusing visual and textual features at multiple semantic levels. To enhance semantic alignment, a Cross-modal Bidirectional Semantic Alignment Module (CBSAM) is built to improve the quality-aware feature extraction of MCINet by mitigating the semantic gap between cross-modal features. The AHSNet is developed to adaptively evaluate the importance of each perceptual level and assign importance-based weights to compute the final quality score. Extensive experiments on three AGIQA databases have demonstrated the effectiveness of the proposed CHPNet. The code of the proposed CHPNet is released at https://github.com/NUIST-Videocoding/CHPNet.git**

***Index Terms*—AI-generated images, quality assessment, cross-modal hierarchical perception network, multi-level cross-modal interaction network, adaptive hierarchical scoring network.**

I. Introduction

WITH the rapid development of Artificial Intelligence (AI), AI-Generated Content (AIGC) has been widely applied in various fields, such as advertising [1], virtual reality [2], [3], and social media [4], [5]. As a key component of AIGC, AI-Generated Images (AGIs) can be produced in real time using generative models guided by interactive prompts, which has shown great potential in many multimedia applications, including TV broadcasting [6], [7] and virtual scene synthesis [8]. However, AGIs often suffer from unrealistic structures and semantic mismatches between images and texts, both of which degrade quality and hinder practical use. To address these issues, developing AI-generated Image Quality Assessment (AGIQA) methods is essential for accurately quantifying AGIs' flaws and facilitating further optimization of generative models.

To evaluate the visual quality of Natural Scene Images (NSIs), numerous Blind Image Quality Assessment (BIQA) methods have been developed. These BIQA methods can be classified into two groups: traditional BIQA methods and deep learning-based BIQA methods. Traditional BIQA methods rely on prior knowledge of the Human Visual System (HVS) or Natural Scene Statistics (NSS) [9], [10], [11] to extract hand-crafted features for Image Quality Assessment (IQA). Deep learning-based BIQA methods [12], [13], [14], [15], [16], [17] typically combine HVS-inspired principles with adaptive feature extraction, which effectively learns distortion-related features and maps them to a quality score. Furthermore, to enhance the robustness and generalization of quality prediction, advanced learning mechanisms such as meta-learning [18], [19] and contrastive learning [20], [21] have been adopted in deep learning-based BIQA methods, which help the network better capture diverse distorted features in images. Although these BIQA methods perform well in predicting the quality of NSIs, they struggle to accurately evaluate both visual quality and image-text consistency of AGIs.

To assess the quality of AGIs, several AGIQA methods [22], [23], [24], [25], [26] have been developed to evaluate the visual quality, authenticity, and multi-modal semantic consistency of AGIs. These methods [24], [25], [26] typically leverage pre-trained vision-language models to extract both visual and textual features from image-text pairs, and then fuse these cross-modal features to predict the AGI quality score. Although these AGIQA methods consider the multi-modal information, they still have some limitations. First, they only fuse high-level visual and textual features to obtain quality-aware features, which are ineffective for aligning fine-grained semantic features, and lack region-wise quality assessment capability. Second, they typically use cross-attention [27] to fuse visual and textual features, but ignore that visual and textual features are responsible for different semantic levels in the image, and degrade the accuracy of quality-aware features. Specifically, visual features are responsible for pixel-wise semantics (e.g., details and textures), whereas textual

Received 8 July 2025; revised 19 September 2025; accepted 7 October 2025. This work was supported by the National Natural Science Foundation of China under Grant 62322116. *(Corresponding author: Zhaoqing Pan.)*

Zhaoqing Pan, Yi Yang, and Feng Yuan are with the School of Electrical and Information Engineering, Tianjin University, Tianjin 300072, China (e-mail: zqpan3-c@my.cityu.edu.hk; 2023234251@tju.edu.cn; yuanfeng_1996@tju.edu.cn).

Haoran Xie and Sam Kwong are with the School of Data Science, Lingnan University, Hong Kong, China (e-mail: hrxie2@gmail.com; samkwong@ln.edu.hk).

Fu Lee Wang is with the School of Science and Technology, Hong Kong Metropolitan University, Hong Kong, China (e-mail: pwang@hkmu.edu.hk).

Digital Object Identifier 10.1109/TBC.2025.3622417

1557-9611 © 2025 IEEE. All rights reserved, including rights for text and data mining, and training of artificial intelligence and similar technologies. Personal use is permitted, but republication/redistribution requires IEEE permission.
See https://www.ieee.org/publications/rights/index.html for more information.

Authorized licensed use limited to: TIANJIN UNIVERSITY. Downloaded on January 13,2026 at 05:47:38 UTC from IEEE Xplore. Restrictions apply.

This article has been accepted for inclusion in a future issue of this journal. Content is final as presented, with the exception of pagination.

features represent object-wise semantics (e.g., content and scene understanding). Third, these methods rely on single-level quality-aware features to predict quality score, failing to capture diverse quality factors of AGIs at multiple perceptual levels.

To address these issues, a Cross-modal Hierarchical Perception Network (CHPNet)-based AGIQA method is proposed in this paper, which simulates the hierarchical visual perception and adaptive decision-making mechanisms of the human brain to generate multi-level quality-aware features and dynamic weights for accurate AGIQA. The proposed CHPNet comprises two networks: a Multi-level Cross-modal Interaction Network (MCINet) and an Adaptive Hierarchical Scoring Network (AHSNet). The MCINet is proposed to align and fuse multi-level visual and textual features, generating hierarchical quality-aware features of AGIs. Furthermore, the Cross-modal Bidirectional Semantic Alignment Module (CBSAM) is designed to adaptively mitigate the semantic gap between cross-modal features across multiple receptive fields while facilitating bidirectional interaction, thereby enhancing the quality-aware feature extraction ability of MCINet. To effectively model the relationship between multi-level quality-aware features and the final quality of AGIs, an AHSNet is developed, in which the importance of multi-level quality-aware features is separately evaluated and adaptively weighted to obtain the final quality score. Overall, the contributions of this work are summarized as follows.

- To evaluate AGI quality, an efficient CHPNet-based quality assessment method is proposed, which simulates the hierarchical visual perception and adaptive decision-making mechanisms of the human brain, to generate multi-level quality-aware features and dynamic weights for accurately predicting the quality of AGIs.
- To align and fuse multi-level visual and textual features, an MCINet is developed, which generates hierarchical quality-aware features of AGIs. Additionally, a CBSAM is designed to bridge the semantic gap between visual and textual modalities, thereby enhancing the quality-aware feature extraction ability of MCINet.
- To improve quality prediction accuracy, an AHSNet is proposed to simulate the adaptive decision-making process of the human brain. It uniquely evaluates the importance of multi-level quality-aware features to AGI quality and intelligently combines these weighted scores to generate the final quality score.
- Our extensive experiments conducted on three benchmark AGIQA databases demonstrate that the proposed CHPNet achieves state-of-the-art performance in AGIQA.

The rest of this paper is structured as follows. Section II introduces the related works. Section III describes the proposed CHPNet in detail. Section IV presents the experimental results and analysis. Finally, Section V concludes this paper.

II. Related Work

A. Deep Learning-Based BIQA Methods

To assess the quality of NSIs, numerous deep learning-based BIQA methods have been developed. Pan et al. [28] introduced a distortion-aware convolutional neural network, which simultaneously extracts both synthetic and authentic distortions while adaptively adjusting their weighting. Li et al. [29] designed an authentically distorted image-oriented BIQA method, which extracts distortion features from both local regions and the entire image and analyzes their interactions to predict perceptual quality score. Pan et al. [30] designed a multi-branch convolutional neural network-based BIQA method, which extracts distortion features from both the spatial and the gradient domains. Yang et al. [31] developed a multi-dimensional attention network-based BIQA method, in which both channel-level and spatial-level attention modules are integrated to capture both global and local features for accurate quality prediction. Lan et al. [32] introduced a BIQA method based on human visual characteristics, which enhances the representation of multi-level degradation features through top-down, bottom-up, and edge-joining pathways. Pan et al. [33] developed a visual compensation restoration network-based BIQA method, which improves quality prediction by restoring distorted images through an image restoration task. Chen et al. [34] developed a hierarchical coarse-to-fine BIQA framework that utilizes multi-level semantic cues to guide feature extraction, focusing on semantically significant distortion regions. Zhou et al. [35] designed a multi-task learning-based BIQA method that utilizes image distortion classification as an auxiliary task to enhance image quality prediction. Shi et al. [21] developed a BIQA method leveraging supervised contrastive learning, where both perceptual features and contrastive learning-extracted degradation features are jointly utilized for quality prediction. Hu et al. [36] developed a BIQA method based on a two-stage human perceptual process, which first constructs coarse-grained distortion perception and then performs fine-grained interaction learning to improve prediction accuracy. Hu et al. [37] introduced a BIQA method that combines CNN and Transformer architectures, which uses a cross-domain interaction module to integrate spatial and gradient features, and a cross-scale integration module to enhance multi-scale distortion representation. These methods are typically designed to learn distortion features from NSIs by modeling the relationship between visual degradations and perceptual quality. However, they often fail to effectively assess the complex degradations and semantic inconsistencies inherent in AGIs.

B. Deep Learning-Based AGIQA Methods

To evaluate the quality of AGIs, several metrics such as Fréchet Inception Distance (FID) [38] and Kernel Inception Distance (KID) [39] have been used to quantify the distributional distance between NSIs and AGIs. However, these metrics only measure statistical differences between image distributions and exhibit weak correlation with human perception. To overcome these limitations, AGIQA methods have been proposed, which take both the AGI and its corresponding text prompts as inputs and predict perceptual quality score. Wang et al. [24] developed an AGIQA method assisted by Large Multi-modal Model (LMM), where the LMM extracts fine-grained semantic features to enhance semantic content understanding. Zhou et al. [25] developed a mixed-scale

Authorized licensed use limited to: TIANJIN UNIVERSITY. Downloaded on January 13,2026 at 05:47:38 UTC from IEEE Xplore. Restrictions apply.

This article has been accepted for inclusion in a future issue of this journal. Content is final as presented, with the exception of pagination.

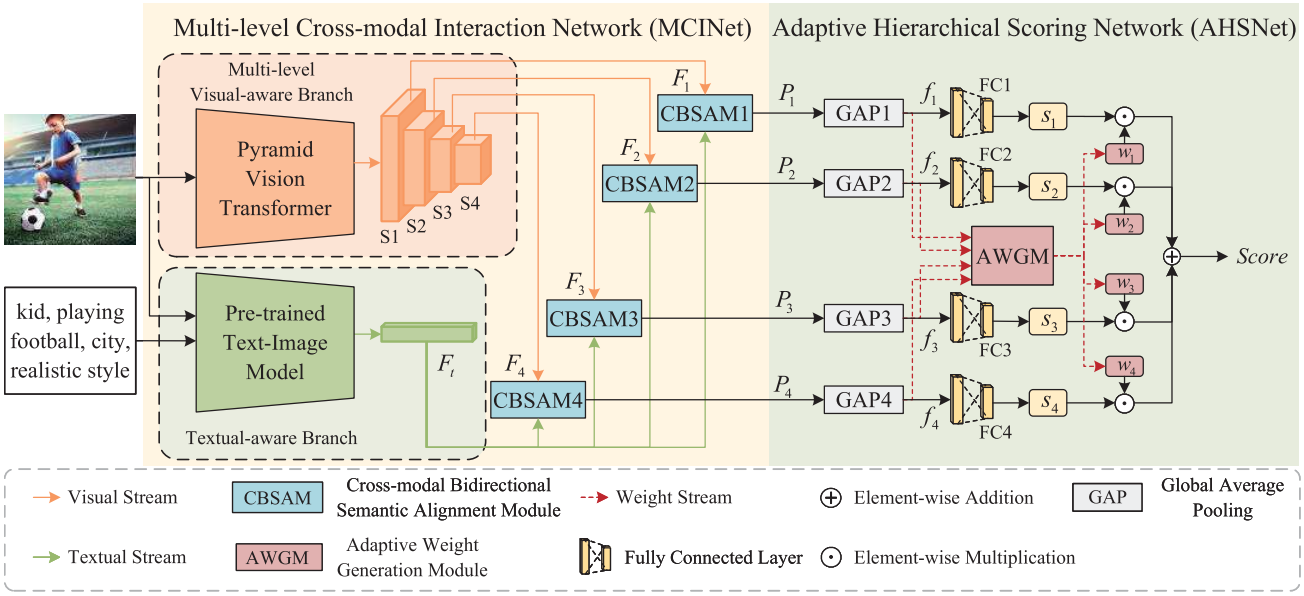

Fig. 1. The architecture of the proposed CHPNet.

AGIQA framework that extracts multi-scale features from images at varying resolutions, evaluating AGIs based on visual quality, authenticity, and consistency. Yang et al. [40] designed a mixture-of-experts boosted AGIQA method, in which visual and semantic features are extracted separately and fused through cross-attention [27], and a mixture-of-experts module is used for final quality prediction. Qu et al. [41] developed a multi-modal AGIQA method, in which an incremental pre-trained task is introduced to enhance image-text alignment, and an image-text fusion module with a special token is designed to integrate visual and prompt information for quality prediction. Zhang et al. [42] proposed a cross-modal AGIQA method, which extracts visual and textual features and applies multi-head attention to learn cross-modal associations for predicting quality score. However, these methods fail to effectively align fine-grained semantic features, limiting their capability for region-wise quality assessment. Moreover, they overlook the semantic-level differences between visual and textual features, which further compromises the accuracy of quality-aware feature extraction. To this end, a CHPNet-based AGIQA method is proposed in this paper, which effectively captures hierarchical quality-aware features from both visual and textual modalities of AGIs, and adaptively weights multi-modal features to accurately predict the quality score.

III. Proposed CHPNet

To accurately evaluate the quality of AGIs, a CHPNet is proposed in this paper, which models the hierarchical visual perception and adaptive decision-making mechanisms of the human brain by generating multi-level quality-aware features and applying a dynamic weighting strategy for precise quality score prediction. The overall architecture of the proposed CHPNet is shown in Fig. 1. It consists of two key components: the MCINet and the AHSNet. The MCINet is designed to fuse cross-modal features and generate robust hierarchical quality-aware features, while the AHSNet aims to improve the accuracy of quality prediction by simulating the adaptive decision-making mechanisms of the human brain. Specifically, the AHSNet predicts quality scores at multiple semantic levels and adaptively aggregates them to obtain the final AGI quality score. The hyper-parameters of the proposed CHPNet are listed in Table I.

A. Multi-Level Cross-Modal Interaction Network (MCINet)

Both visual and textual modalities play crucial roles in AGIQA, as they enable a comprehensive understanding of AGI content and facilitate quality prediction from both local and global perspectives. Existing AGIQA methods typically extract quality-aware features by modeling interactions between high-level visual and textual features, but they often fail to effectively align fine-grained semantic features. This limitation hinders accurate region-wise quality prediction in AGIs. To address this problem, an MCINet is proposed to extract multi-level visual features and separately fuse them with textual features to generate hierarchical quality-aware features. The proposed MCINet consists of three key components: the multi-level visual-aware branch, the textual-aware branch, and the CBSAM. The multi-level visual-aware branch is built based on the Pyramid Vision Transformer (PVT) [43], which is pre-trained on the large-scale ImageNet [44] and has strong capabilities in capturing both low-level and high-level image priors. The textual-aware branch is built upon the Pre-trained Text-Image Model (PTIM) [45], which effectively captures robust textual features by incorporating contextual information from images. Furthermore, the CBSAM reduces the semantic gap between visual and textual features by employing multi-receptive-field feature extraction and bidirectional interaction, which enables effective extraction of quality-aware features. The working process of the proposed MCINet can

Authorized licensed use limited to: TIANJIN UNIVERSITY. Downloaded on January 13,2026 at 05:47:38 UTC from IEEE Xplore. Restrictions apply.

This article has been accepted for inclusion in a future issue of this journal. Content is final as presented, with the exception of pagination.

TABLE I

THE HYPER-PARAMETERS OF THE PROPOSED CHPNET, WHERE W AND H REPRESENT THE WIDTH AND HEIGHT OF THE INPUT AGI, AND C DENOTES THE CHANNEL OF THE KERNEL DIMENSION

Network	Layer	Kernel Dimension	Input Size	Output Size
MCINet	PVT: S1	Default as [43]	W×H×3	W/4×H/4×64
	PVT: S2		W/4×H/4×64	W/8×H/8×128
	PVT: S3		W/8×H/8×128	W/16×H/16×320
	PVT: S4		W/16×H/16×320	W/32×H/32×512
	PTIM	Default as [40]	35	35×78
	CBSAM1/2/3/4: DWConv3×3	C×3×3×C (C=64, 128, 320, 512)	(F_1 : W/4×H/4×64; F_t : 35×78) (F_2 : W/8×H/8×128; F_t : 35×78) (F_3 : W/16×H/16×320; F_t : 35×78) (F_4 : W/32×H/32×512; F_t : 35×78)	P_1 : W/4×H/4×64 P_2 : W/8×H/8×128 P_3 : W/16×H/16×320 P_4 : W/32×H/32×512
	CBSAM1/2/3/4: DWConv5×5	C×5×5×C (C=64, 128, 320, 512)		
	CBSAM1/2/3/4: DWConv7×7	C×7×7×C (C=64, 128, 320, 512)		
	CBSAM1/2/3/4: Conv1D3	C×3×C (C=64, 128, 320, 512)		
	CBSAM1/2/3/4: Conv1D5	C×5×C (C=64, 128, 320, 512)		
	CBSAM1/2/3/4: Conv1D7	C×7×C (C=64, 128, 320, 512)		
	CBSAM1/2/3/4: Conv1D1	C×1×C (C=64, 128, 320, 512)		
	CBSAM1/2/3/4: Conv2D1×1	C×1×1×C (C=64, 128, 320, 512)		
	CBSAM1/2/3/4: Linear	C×512 (C=64, 128, 320, 512)		
	CBSAM1/2/3/4: Layer Norm	/		
AHSNet	GAP1	/	P_1 : W/4×H/4×64	1×1×64
	GAP2		P_2 : W/8×H/8×128	1×1×128
	GAP3		P_3 : W/16×H/16×320	1×1×320
	GAP4		P_4 : W/32×H/32×512	1×1×512
	FC1/FC2/FC3/FC4	C×1 (C=64, 128, 320, 512)	1×1×C (C=64, 128, 320, 512)	1
	AWGM: Conv1D5	1024×5×1024	1×1×C (C=64, 128, 320, 512)	4
	AWGM: FC	1024×1024		
	AWGM: Linear	1024×4		

be expressed as,

$$\begin{cases} \{F_1, F_2, F_3, F_4\} = E_v(I), \\ F_t = E_b(I, T), \\ P_i = C(F_i, F_t), \ \ i = 1, 2, 3, 4, \end{cases} \tag{1}$$

where I and T represent the AGI and its corresponding textual prompt, respectively; $E_v(\cdot)$ and $E_b(\cdot)$ denote the pre-trained PVT and PTIM models, which are used to extract visual and textual features; F_i $(i = 1, 2, 3, 4)$ denote the feature maps from the four stages of PVT; F_t indicates the textual features extracted using PTIM; $C(\cdot)$ denotes the proposed CBSAM, and P_i represents the final output of the proposed MCINet.

Cross-Modal Bidirectional Semantic Alignment Module (CBSAM): Cross-modal fusion plays an important role in comprehensively understanding AGI content and generating quality-aware features. Existing AGIQA methods typically use textual information as auxiliary guidance to enhance the representational capacity of visual features. However, these methods ignore the semantic differences between visual and textual features, which limits the accuracy of quality-aware feature extraction. To address this limitation, a CBSAM is proposed, which employs multi-receptive-field feature extraction and bidirectional interaction to improve the alignment and fusion capabilities of cross-modal features. As illustrated in Fig. 2, the proposed CBSAM consists of two stages: an information aggregation stage and an information interaction stage.

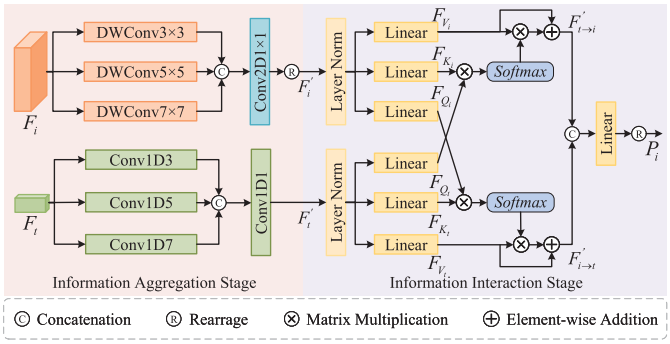

Fig. 2. The architecture of the proposed CBSAM.

The information aggregation stage is designed to capture visual and textual features with multiple receptive fields, which enables the effective aggregation of contextual information within individual modalities, thereby improving the network's capacity to recognize and mitigate the semantic gap between visual and textual features. Specifically, the input visual features F_i are separately processed by three depth-wise separable convolutional layers with kernel sizes of 3×3, 5×5, and 7×7. The resulting feature maps are then concatenated

Authorized licensed use limited to: TIANJIN UNIVERSITY. Downloaded on January 13,2026 at 05:47:38 UTC from IEEE Xplore. Restrictions apply.

This article has been accepted for inclusion in a future issue of this journal. Content is final as presented, with the exception of pagination.

and further fused by a 1×1 convolutional layer, followed by reshaping to obtain the aggregated visual features F'_i. Similarly, the textual features F_t are processed by three parallel 1D convolutional layers with kernel sizes of 3, 5, and 7, and are then aggregated into F'_t through a 1D convolutional layer with a kernel size of 1.

The information interaction stage aims to model bidirectional dependencies between F'_i and F'_t, which effectively generates cross-modal features strongly correlated with AGIQA. Technically, both F'_i and F'_t are then normalized using layer normalization and projected through three parallel linear projection layers to generate queries $\{F_{Q_i},\ F_{Q_t}\}$, keys $\{F_{K_i},\ F_{K_t}\}$, and values $\{F_{V_i},\ F_{V_t}\}$, respectively.

To calculate cross-attention from visual to textual features, vectors F_{Q_i} and F_{K_t} are used to generate attention weights through matrix multiplication and *Softmax* operation, which are applied to the vector F_{V_t} to obtain $F'_{i\to t}$. Similarly, attention weights generated from F_{Q_t} and F_{K_i} are applied to the vector F_{V_i} to obtain $F'_{t\to i}$, incorporating textual information into visual features. Finally, $F'_{t\to i}$ and $F'_{i\to t}$ are concatenated and projected through a linear projection layer, followed by reshaping to obtain the quality-aware features P_i. The working process of the proposed CBSAM can be expressed as,

$$\begin{cases} F'_i = \mathcal{R}\left(\theta^1_{2D}\left(Concat\left(\vartheta_3(F_i), \vartheta_5(F_i), \vartheta_7(F_i)\right)\right)\right), \\ F'_t = \theta^1_{1D}\left(Concat\left(\theta^3_{1D}(F_t), \theta^5_{1D}(F_t), \theta^7_{1D}(F_t)\right)\right), \\ F_{N_i\in\{Q_i,K_i,V_i\}} = linear(F'_i), \\ F_{N_t\in\{Q_t,K_t,V_t\}} = linear(F'_t), \\ F'_{i\to t} = Softmax\left((F_{Q_i} \times (F_{K_t})^\top)/\sqrt{d}\right) \times F_{V_t} + F_{V_t}, \\ F'_{t\to i} = Softmax\left((F_{Q_t} \times (F_{K_i})^\top)/\sqrt{d}\right) \times F_{V_i} + F_{V_i}, \\ P_i = \mathcal{R}\left(linear\left(Concat(F'_{t\to i}, F'_{i\to t})\right)\right), \end{cases} \tag{2}$$

where $\vartheta_k(\cdot)$ denotes the depth-wise separable convolution layer with kernel size $k \times k$; $\theta^k_{2D}(\cdot)$ represents the 2D convolutional layer with kernel size $k\times k$; $\theta^k_{1D}(\cdot)$ denotes the 1D convolutional layer with kernel size k; $Concat(\cdot)$ indicates the concatenation operation; $\mathcal{R}(\cdot)$ is the reshaping operation; $Linear(\cdot)$ is a linear projection layer; $(\cdot)^\top$ denotes matrix transposition; $\sqrt{d}$ is a scaling factor for training stabilization.

B. Adaptive Hierarchical Scoring Network (AHSNet)

The quality assessment of AGIs can be modeled as an adaptive decision-making process of the human brain, which is influenced by multiple weighted quality factors, including visual degradation, semantic inconsistency, and content authenticity. In general, these diverse quality factors are comprehensively embedded in the quality-aware features of AGI at different semantic levels [46]. Specifically, low-level features primarily capture pixel-level distortions (e.g., blurriness and AI artifacts), while high-level features detect semantic-level degradations (e.g., cross-modal inconsistency or lack of content authenticity). Therefore, it is essential to adaptively weight multi-level features based on their importance. To accurately predict the quality of AGIs, an AHSNet is proposed, which separately predicts quality scores at multiple perceptual levels and adaptively aggregates these scores based on learned weights. The detailed architecture of the proposed AHSNet is shown in Fig. 1. First, the quality-aware features P_i at the ith level are processed by a global average pooling layer to aggregate global information along the spatial dimension, yielding a feature vector f_i. Then, a fully connected layer is utilized to build channel-wise relationships of f_i, and predict the individual level quality score s_i. Finally, in order to effectively model the inner correlations among multi-level quality-aware features, an Adaptive Weight Generation Module (AWGM) is proposed, which generates w_i to adaptively fuse individual level quality score s_i and obtain the final quality score s. In summary, the working process of the proposed AHSNet is formulated as,

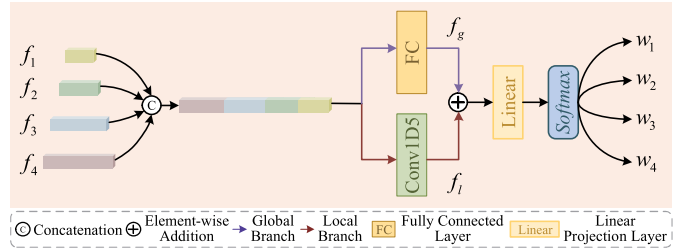

Fig. 3. The architecture of the proposed AWGM.

$$\begin{cases} s_i = FC\left(G(P_i)\right), \quad i = 1, 2, 3, 4, \\ \{w_1, w_2, w_3, w_4\} = A\left(G(P_1), G(P_2), G(P_3), G(P_4)\right), \\ s = \sum_{i=1}^{4} s_i \cdot w_i, \end{cases} \tag{3}$$

where $G(\cdot)$ denotes the global average pooling layer; $FC(\cdot)$ represents the fully connected layer; $A(\cdot)$ denotes the proposed AWGM.

Adaptive Weight Generation Module (AWGM): To effectively model the importance of multi-level quality-aware features to the quality of AGIs, an AWGM is designed to learn adaptive weights by analyzing both global and local dependencies among these features. The architecture of the proposed AWGM is presented in Fig. 3. First, the vectors f_1, f_2, f_3, f_4 obtained from different levels are concatenated and then fed into two parallel branches, namely the global branch and the local branch. In the global branch, a fully connected layer is utilized to model channel-wise dependencies among all channels, thereby capturing comprehensive global contextual information. In the local branch, a 1D convolution layer is used to extract local contextual relationships between neighboring channels, which enhances the ability of the model to capture fine-grained channel-wise information. The outputs of the two branches are combined through element-wise addition, followed by a linear projection layer and a *Softmax* function to generate weights w_i, which reflect the importance of different quality-aware features. The working process of the proposed AWGM is defined as,

$$\begin{cases} f_g = FC\left(Concat(f_1, f_2, f_3, f_4)\right), \\ f_l = \theta^5_{1D}\left(Concat(f_1, f_2, f_3, f_4)\right), \\ \{w_1, w_2, w_3, w_4\} = linear\left(Softmax(f_l + f_g)\right), \end{cases} \tag{4}$$

where $\theta^5_{1D}(\cdot)$ represents a 1D convolutional layer with a kernel size of 5, f_g and f_l are the outputs of the global and local branches, respectively.

Authorized licensed use limited to: TIANJIN UNIVERSITY. Downloaded on January 13,2026 at 05:47:38 UTC from IEEE Xplore. Restrictions apply.

This article has been accepted for inclusion in a future issue of this journal. Content is final as presented, with the exception of pagination.

TABLE II
SUMMARY OF THE AGIQA DATABASES

Database	Number of images	Number of text prompts	Number of generative models	Quality dimension
AGIQA-1K [47]	1080	180	2	1
AGIQA-3K [48]	2982	300	6	2
AIGCIQA2023 [49]	2400	100	6	3

C. Implementation Details

The proposed CHPNet is implemented in PyTorch, and the experiments are conducted on an NVIDIA RTX 3090 GPU. During training, the batch size is set to 16, and the model is trained for 100 epochs. To be compatible with the PVT [43] backbone network, input images are cropped into 224×224 sub-images for the multi-level visual-aware branch. Furthermore, three sub-images are randomly cropped from each input image to enable the model to train on different spatial regions while balancing regional coverage and computational cost. For the textual-aware branch, the images are resized to 224×224 to ensure compatibility with the PTIM [45], which serves as the backbone for this branch. The AdamW optimizer is used with an initial learning rate of 1×10^{-5}, a weight decay of 1×10^{-5}, and a cosine annealing learning rate scheduler where T_{max} and η_{min} are set to 50 and 0, respectively. The L_1 loss function is used to minimize the difference between the predicted score and its corresponding Ground Truth (GT) score, which is defined as,

$$L_1 = \frac{1}{N} \sum_{i=1}^{N} |q_i - \hat{q}_i| , \tag{5}$$

where N denotes the number of training images, and q_i and $\hat{q}_i$ represent the predicted value and corresponding GT score of the ith image, respectively. During testing, each input image is randomly cropped into 10 sub-images of size 224×224 for the multi-level visual-aware branch, while the textual branch is fed with a resized image of the same size. The final predicted score is obtained by averaging the outputs from all 10 cropped sub-images.

IV. EXPERIMENTS

A. Experimental Setup

1) Databases: To validate the effectiveness of the proposed CHPNet, we conducted experiments on three representative AGIQA databases: AGIQA-1K [47], AGIQA-3K [48], and AIGCIQA2023 [49]. These databases consist of textual prompts and the corresponding AGIs generated by text-to-image generative models, along with quality scores obtained through subjective evaluation across different quality dimensions.

AGIQA-1K [47] contains AGIs generated by two text-to-image generative models [50]: Stable Inpainting v1 and Stable Diffusion v2, with Mean Opinion Score (MOS) used as quality annotations. AGIQA-3K [48] includes AGIs generated by six text-to-image generative models: AttnGAN [51], Stable Diffusion v1.5 [50], Stable Diffusion XL2.2 [52], Midjourney [53], DALLE-2 [54], and GLIDE [55], annotated with visual quality and consistency scores. AIGCIQA2023 [49] comprises AGIs generated by six text-to-image generative models, including GLIDE [55], Lafite [56], DALLE-2 [54], Stable Diffusion [50], ControlNet [57], and UniDiffusion [58], with annotations for visual quality, consistency, and authenticity. Further details of these databases are listed in Table II. Following previous works [40], [41], [42], we randomly split each database into 80% training and 20% testing sets based on textual prompts to prevent content overlap. The process is repeated 10 times, and the average results are reported [59].

2) Evaluation Metrics: To evaluate the prediction performance of the proposed CHPNet, two widely used metrics are adopted, namely Spearman's Rank Order Correlation Coefficient (SROCC) and Pearson's Linear Correlation Coefficient (PLCC). SROCC measures the monotonic relationship between predicted and GT scores, while PLCC quantifies their linear correlation. Both metrics range from -1 to 1, with higher absolute values indicating better prediction performance.

B. Quality Prediction Performance Comparison

To validate the quality prediction performance of the proposed CHPNet, it is compared with five deep learning-based IQA methods for NSIs, i.e., DBCNN [13], HyperIQA [14], MUSIQ [15], DACNN [28], and MANIQA [31], and four AGIQA methods, i.e., Zhang [42], AMFF-Net [25], IP-IQA [41], and MoE-AGIQA-v1 [40]. The SROCC and PLCC results on the three databases are listed in Tables III and IV. The results of DBCNN [13], HyperIQA [14], and MUSIQ [15], Zhang [42] and AMFF-Net [25] are directly adopted from the papers. For IP-IQA [41], and MoE-AGIQA-v1 [40], partial results are reported in the papers, while the missing values are reproduced by running their official implementations. The results of DACNN [28], MANIQA [31], are fully reproduced using their released codes under the same dataset splits. The results of the proposed CHPNet are obtained through our own training.

It can be observed from Tables III and IV that most NSI IQA methods achieve lower performance than AGIQA methods. This performance gap occurs because NSI IQA methods primarily rely on distortion features extracted from images and fail to incorporate semantic information from textual prompts, limiting their ability to learn quality-aware features. Among AGIQA methods, the proposed CHPNet demonstrates superior performance on AGIQA-1K [47], achieving SROCC and PLCC values of 0.8596 and 0.8990, respectively. For AGIQA-3K [48], our proposed CHPNet achieves the best prediction performance, with SROCC (0.8542) and PLCC (0.9196)

Authorized licensed use limited to: TIANJIN UNIVERSITY. Downloaded on January 13,2026 at 05:47:38 UTC from IEEE Xplore. Restrictions apply.

This article has been accepted for inclusion in a future issue of this journal. Content is final as presented, with the exception of pagination.

TABLE III
QUANTITATIVE RESULTS OF EACH METHOD ON THE AGIQA-1K [47] AND AGIQA-3K [48] DATASETS (THE BEST RESULT IS SHOWN IN BOLD)

Method	AGIQA-1K [47]		AGIQA-3K [48]					
	MOS		Visual Quality		Consistency		Average	
	SROCC	PLCC	SROCC	PLCC	SROCC	PLCC	SROCC	PLCC
DBCNN [13]	0.7491	0.8211	0.8154	0.8747	0.6329	0.7823	0.7242	0.8285
HyperIQA [14]	0.7803	0.8299	0.8400	0.8958	0.6276	0.8087	0.7338	0.8523
MUSIQ [15]	/	/	0.8349	0.8862	0.6292	0.7839	0.7321	0.8351
DACNN [28]	0.8243	0.8713	0.8558	0.9056	0.7254	0.8549	0.7906	0.8803
MANIQA [31]	0.8217	0.8783	0.8683	0.9150	0.6956	0.8223	0.7820	0.8687
Zhang [42]	0.8297	0.8702	0.8446	0.8841	/	/	0.8446	0.8841
AMFF-Net [25]	/	/	0.8565	0.9050	0.7513	0.8476	0.8039	0.8763
IP-IQA [41]	0.8401	0.8922	0.8634	0.9116	0.6530	0.8076	0.7582	0.8596
MoE-AGIQA-v1 [40]	0.8530	0.8877	0.8758	0.9294	**0.8235**	0.8985	0.8497	0.9140
CHPNet (Proposed)	**0.8596**	**0.8990**	**0.8911**	**0.9306**	0.8172	**0.9086**	**0.8542**	**0.9196**

TABLE IV
QUANTITATIVE RESULTS OF EACH METHOD ON THE AIGCIQA2023 [49] DATASET (THE BEST RESULT IS SHOWN IN BOLD)

Method	AIGCIQA2023 [49]							
	Visual Quality		Consistency		Authenticity		Average	
	SROCC	PLCC	SROCC	PLCC	SROCC	PLCC	SROCC	PLCC
DBCNN [13]	0.8339	0.8577	0.6837	0.6787	0.7485	0.7436	0.7554	0.7600
HyperIQA [14]	0.8483	0.8689	0.7541	0.7439	0.7798	0.7718	0.7941	0.7949
MUSIQ [15]	0.8423	0.8577	0.762	0.7527	0.7615	0.7509	0.7886	0.7871
DACNN [28]	0.8532	0.8709	0.6634	0.6704	0.7221	0.7179	0.7462	0.7531
MANIQA [31]	0.8307	0.8609	0.6024	0.6023	0.7478	0.7458	0.7270	0.7363
Zhang [42]	0.8127	0.8348	0.7168	0.7233	0.7189	0.7221	0.7495	0.7601
AMFF-Net [25]	0.8409	0.8537	**0.7782**	0.7638	0.7749	0.7643	0.7980	0.7939
IP-IQA [41]	0.8424	0.8627	0.7222	0.7166	/	/	0.7823	0.7897
MoE-AGIQA-v1 [40]	**0.8729**	0.8860	0.7641	0.7590	0.7933	0.7941	0.8101	0.8130
CHPNet (Proposed)	0.8677	**0.8884**	0.7739	**0.7661**	**0.8010**	**0.7942**	**0.8142**	**0.8162**

overall. On the visual quality dimension, it attains 0.8911 (SROCC) and 0.9306 (PLCC), while on the consistency dimension, it scores 0.8172 (SROCC) and 0.9086 (PLCC). Different from AGIQA-1K [47] and AGIQA-3K [48], AIGCIQA2023 [49] considers multiple aspects of image quality by introducing three evaluation dimensions, thereby increasing the complexity of the assessment. Despite this, the proposed CHPNet still achieves performance comparable to that of most existing methods on AIGCIQA2023 [49], with average SROCC and PLCC values of 0.8142 and 0.8162, respectively. For each quality dimension, the proposed CHPNet achieves 0.8677 and 0.8884 on the visual quality dimension, 0.7739 and 0.7661 on the consistency dimension, and 0.8010 and 0.7942 on the authenticity dimension, respectively. The excellent performance of the proposed CHPNet stems from three key innovations: (1) The proposed MCINet effectively learns comprehensive quality-aware features by aligning visual and textual features; (2) The proposed CBSAM helps the network mitigate the semantic gap between modalities through multi-receptive feature extraction and bidirectional interaction; (3) The proposed AHSNet improves prediction accuracy by adaptively weighting the importance of multi-level quality-aware features.

To intuitively validate the effectiveness of the proposed CHPNet, Figure 4 and Figure 5 compare quality scores predicted by different IQA methods, including GT, MANIQA [31], AMFF-Net [25], MoE-AGIQA-v1 [40], and the proposed CHPNet, for various AGIs generated by different models. To enable fair comparison, we min-max normalize the predicted scores of each method to align with the GT score range. For clarity, we highlight GT scores in green and CHPNet predictions in red. It can be seen that the proposed CHPNet predicts quality scores closest to GT values, demonstrating strong AGIQA capability.

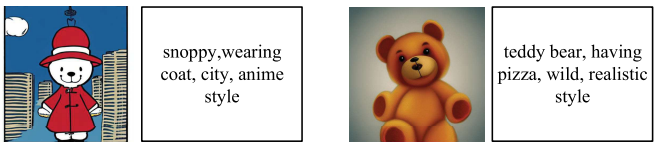

(a) Stable Inpainting v1 [50]
3.337/2.483/2.874/2.917

(b) Stable Diffusion v2 [50]
1.871/1.924/1.779/1.851

Fig. 4. Examples of AGIs from the AGIQA-1K [47] testing set, which are generated by two different generative models. The second row shows the MOS values, indicating the GT followed by the predicted scores from MANIQA [31], MoE-AGIQA-v1 [40], and proposed CHPNet, respectively.

C. Generalization Ability Comparison

To evaluate the generalization ability of the proposed CHPNet, the cross-database tests are conducted by comparing it with two deep learning-based IQA methods for NSIs [28], [31]

Authorized licensed use limited to: TIANJIN UNIVERSITY. Downloaded on January 13,2026 at 05:47:38 UTC from IEEE Xplore. Restrictions apply.

This article has been accepted for inclusion in a future issue of this journal. Content is final as presented, with the exception of pagination.

Fig. 5. Examples of AGIs from the AGIQA-3K [48] testing set, which are generated by six different generative models. The second row shows the visual quality scores, and the third row presents the consistency scores. For each metric, the values indicate the GT followed by the predicted scores from MANIQA [31], AMFF-Net [25], MoE-AGIQA-v1 [40], and proposed CHPNet, respectively.

TABLE V

SROCC AND PLCC RESULTS OF CROSS-DATABASE TESTS, WHICH USES AGIQA-1K [47] AND AGIQA-3K [48] AS TRAINING AND TESTING SETS, RESPECTIVELY

Method	Visual Quality		Consistency	
	SROCC	PLCC	SROCC	PLCC
DACNN [28]	0.6278	0.6405	0.4085	0.4174
MANIQA [31]	0.6157	0.6217	0.4401	0.4488
IP-IQA [41]	0.7276	0.7381	0.6038	0.6189
MoE-AGIQA-v1 [40]	0.7483	0.7506	**0.6116**	**0.6252**
CHPNet (Proposed)	**0.7568**	**0.7688**	0.6041	0.6224

TABLE VI

SROCC AND PLCC RESULTS OF CROSS-DATABASE TESTS, WHICH USES AGIQA-3K [48] AND AGIQA-1K [47] AS TRAINING AND TESTING SETS, RESPECTIVELY

Method	MOS	
	SROCC	PLCC
DACNN [28]	0.6292	0.7578
MANIQA [31]	0.6550	0.7609
IP-IQA [41]	0.6893	0.7028
MoE-AGIQA-v1 [40]	0.7101	0.8008
CHPNet (Proposed)	**0.7230**	**0.8064**

and two AGIQA methods [40], [41]. The experimental results are presented in Table V and Table VI, and it can be observed that the proposed CHPNet achieves competitive performance compared with the four competing methods. Specifically, when trained on AGIQA-1K [47] and tested on AGIQA-3K [48], the proposed CHPNet achieves the best performance in terms of visual quality score and ranks second in terms of consistency score. For AGIQA-3K [48] training database, the proposed CHPNet obtains the best performance on AGIQA-1K [47] testing database. In summary, the proposed CHPNet demonstrates strong generalization ability in assessing the quality of AGIs.

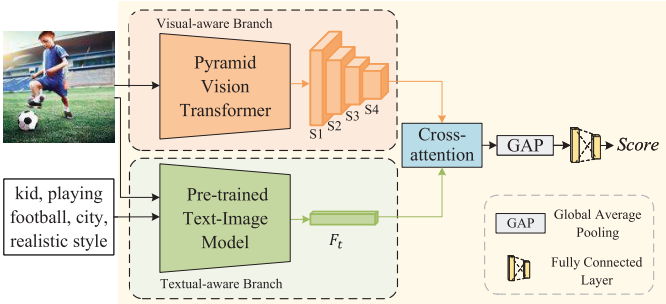

Fig. 6. The structure of "Base", where textual features serve as queries to guide visual features through cross-attention.

D. Ablation Study

1) Effectiveness of Each Component: The proposed CHPNet mainly consists of two sub-networks: MCINet, which learns multi-level quality-aware features to simulate the hierarchical visual perception of the human brain, and AHSNet, which enhances prediction accuracy through adaptive weighting. To validate the effectiveness of MCINet and AHSNet, we conduct ablation studies, with results summarized in Table VII. In the Table, "Base" denotes the baseline structure, where only the visual features from the last layer of PVT [43] are fused with the textual features for quality score regression, as shown in Fig. 6. It can be observed that the proposed CHPNet achieves the best prediction performance when all components are included, which proves that the proposed MCINet and AHSNet effectively improve the accuracy of AGI quality score prediction.

2) Effectiveness of the MCINet: To evaluate the effectiveness of fusing multi-level visual features from PVT [43] with textual features, we conduct ablation experiments by starting from the high-level visual features and progressively adding low-level visual features. The results are listed in Table VIII. It can be clearly observed that incorporating low-level visual features and fusing them with textual features improves the prediction accuracy on both AGIQA-1K [47] and AGIQA-3K [48]. The proposed CHPNet achieves the best performance when all four stages of visual features are utilized. These results demonstrate that the fusion of multi-level visual and textual features can generate hierarchical quality-aware features, which can effectively align fine-grained semantic features across modalities, thereby improving the accuracy of AGI quality prediction.

To clearly illustrate the effectiveness of fusing F_1-F_4 with textual features, we present the Grad-CAM [60] visualizations for both F_1-F_4 and P_1-P_4 in Fig. 7, in which F_1-F_4 denote the multi-level visual features extracted from the PVT [43] and P_1-P_4 represent the quality-aware features obtained by fusing textual features with F_1-F_4 through CBSAM. It can be

Authorized licensed use limited to: TIANJIN UNIVERSITY. Downloaded on January 13,2026 at 05:47:38 UTC from IEEE Xplore. Restrictions apply.

This article has been accepted for inclusion in a future issue of this journal. Content is final as presented, with the exception of pagination.

TABLE VII

ABLATION STUDY RESULTS OF THE KEY COMPONENTS OF THE PROPOSED CHPNET, EVALUATED USING SROCC AND PLCC

Base		✓	✓	✓	✓
MCINet			✓	✓	✓
CBSAM				✓	✓
AHSNet					✓
AGIQA-1K [47]	MOS	0.8351 / 0.8705	0.8391 / 0.8869	0.8585 / 0.8929	**0.8596 / 0.8990**
AGIQA-3K [48]	Visual Quality	0.8464 / 0.9046	0.8707 / 0.9182	0.8834 / 0.9235	**0.8911 / 0.9306**
	Consistency	0.7998 / 0.8747	0.8075 / 0.8978	0.8108 / 0.8978	**0.8172 / 0.9086**
AIGCIQA2023 [49]	Visual Quality	0.8478 / 0.8691	0.8594 / 0.8798	0.8621 / 0.8829	**0.8677 / 0.8884**
	Consistency	0.7419 / 0.7375	0.7553 / 0.7568	0.7696 / 0.7571	**0.7739 / 0.7661**
	Authenticity	0.7784 / 0.7783	0.7894 / 0.7809	0.7917 / 0.7905	**0.8010 / 0.7942**

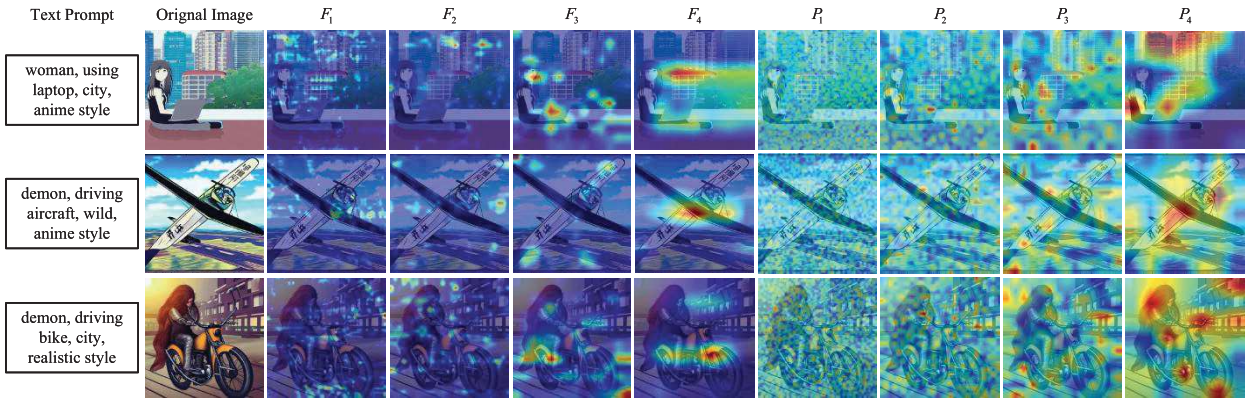

Fig. 7. Grad-CAM [60] visualizations of both visual features(F_1-F_4) and hierarchical quality-aware features (P_1-P_4) generated by the proposed CHPNet on samples from the AGIQA-1K [47].

TABLE VIII

SROCC AND PLCC RESULTS OF THE PROPOSED CHPNET WITH DIFFERENT STAGES OF PVT

PVT Stages	AGIQA-1K [47]	AGIQA-3K [48]	
	MOS	Visual Quality	Consistency
S4	0.8402 / 0.8897	0.8591 / 0.9096	0.8028 / 0.8839
S4 + S3	0.8485 / 0.8920	0.8671 / 0.9119	0.8137 / 0.8926
S4 + S3 + S2	0.8504 / 0.8956	0.8857 / 0.9287	0.8192 / 0.8994
S4 + S3 + S2 + S1	**0.8596 / 0.8990**	**0.8911 / 0.9306**	**0.8285 / 0.9086**

TABLE IX

SROCC AND PLCC RESULTS OF DIFFERENT FUSION METHODS

Method	AGIQA-1K [47]	AGIQA-3K [48]	
	MOS	Visual Quality	Consistency
Cross-Attention-I	0.8441 / 0.8879	0.8714 / 0.9272	0.8150 / 0.9051
Cross-Attention-T	0.8494 / 0.8959	0.8890 / 0.9302	0.8127 / 0.9046
CHPNet (Proposed)	**0.8596 / 0.8990**	**0.8911 / 0.9306**	**0.8185 / 0.9086**

observed that low-level features (F_1, F_2, P_1, P_2) primarily capture local textures and edges, while high-level features (F_3, F_4, P_3, P_4) progressively capture more semantically meaningful structures. In addition, it also can be observed that fused multi-level quality-aware features enable the network to focus on semantically important regions that align closely with the input textual prompts, such as contextual scenes (e.g., anime style, realistic style) and specific objects (e.g., laptop, city) through cross-modal fusion. This qualitative analysis demonstrates that hierarchical quality-aware features effectively analyze diverse factors influencing quality assessment, including visual quality, semantic consistency, and content authenticity.

3) Effectiveness of the CBSAM: The CBSAM leverages multiple receptive fields and bidirectional interaction to mitigate the semantic gap between cross-modal features, thereby improving the quality-aware feature extraction capability of MCINet. To further validate the advantages of the proposed CBSAM in cross-modal fusion, we conduct ablation experiments by replacing it with cross-attention [27]. The experimental results are presented in Table IX. In our experiments, "Cross-Attention-I" and "Cross-Attention-T" denote configurations where visual and textual features respectively serve as the query in cross-attention [27]. The results demonstrate that our CHPNet achieves the best prediction performance when using CBSAM, which significantly improves cross-modal feature alignment and fusion capabilities. These findings confirm that the proposed CBSAM effectively: (1) bridges semantic gaps across modalities through multi-receptive-field processing, and (2) enables bidirectional interaction for learning precise perceptual quality-aware features.

To further evaluate the effectiveness of the multi-receptive-field feature extraction, ablation experiments are conducted by replacing the proposed "3×3, 5×5, 7×7" kernel group

Authorized licensed use limited to: TIANJIN UNIVERSITY. Downloaded on January 13,2026 at 05:47:38 UTC from IEEE Xplore. Restrictions apply.

This article has been accepted for inclusion in a future issue of this journal. Content is final as presented, with the exception of pagination.

TABLE X
SROCC AND PLCC RESULTS OF THE PROPOSED CBSAM WITH DIFFERENT KERNEL SIZES

Kernel Sizes	AGIQA-1K [47]	AGIQA-3K [48]	
	MOS	Visual Quality	Consistency
1×1, 3×3, 5×5	0.8571 / 0.8987	0.8889 / 0.9298	0.8172 / 0.9064
3×3, 5×5, 7×7	**0.8596 / 0.8990**	**0.8911 / 0.9306**	**0.8172 / 0.9086**
5×5, 7×7, 9×9	0.8573 / 0.8990	0.8899 / 0.9302	0.8171 / 0.9048

TABLE XI
COMPUTATIONAL COMPLEXITY RESULTS OF EACH METHOD

Method	FLOPs (GB)	Params (M)	Time (s)
DACNN [28]	5.01	13.43	0.662
MANIQA [31]	108.62	135.70	0.015
AMFF-Net [25]	41.48	50.30	0.041
IPIQA [41]	32.41	65.51	0.023
MoE-AGIQA-v1 [40]	68.16	428.98	0.184
CHPNet (Proposed)	74.26	506.88	0.286

with "1×1, 3×3, 5×5" and "5×5, 7×7, 9×9". The experimental results are reported in Table X. It can be observed that the proposed CHPNet achieves the best performance with the combination of "3×3, 5×5, 7×7". This is because "3×3, 5×5, 7×7" kernel group provides a balanced trade-off between capturing fine-grained local details and modeling broader contextual dependencies, whereas the "1×1, 3×3, 5×5" kernel size combination focuses too much on local details and the "5×5, 7×7, 9×9" kernel size combination loses local information due to larger receptive fields.

E. Computational Complexity Analysis

To evaluate computational complexity, we analyze Floating-Point Operations (FLOPs), parameter counts, and inference time across different methods, with results presented in Table XI. All experiments are conducted under identical hardware conditions: Windows 10 Enterprise X64 OS, Intel Xeon W-2245 CPU (3.90 GHz), 64 GB RAM, and an NVIDIA GeForce RTX 3090 GPU.

In terms of FLOPs, the proposed CHPNet demonstrates comparable complexity to MANIQA [31], while being slightly higher than MoE-AGIQA-v1 [40], AMFF-Net [25], and IPIQA [41]. It can be observed that the parameter size of the proposed CHPNet is 506.88 M, which is much larger than DACNN [28] (13.43 M), AMFF-Net [25] (50.30 M), IPIQA [41] (65.51 M), but comparable to MANIQA [31] (135.7 M) and MoE-AGIQA-v1 [40] (428.98 M). This increase primarily stems from (1) the pre-trained vision-language model for textual feature extraction, and (2) the hierarchical cross-modal interaction structure. When predicting the quality score of an image with the resolution of 512×512, our proposed CHPNet consumes 0.286s on average, which is higher than MANIQA [31] (0.015s), AMFF-Net [25] (0.041s), and IPIQA [41] (0.023s), but comparable to DACNN [28] (0.662s) and MoE-AGIQA-v1 [40] (0.184s). The increase of inference time is mainly because that the proposed CHPNet performs 10 random crops of size 224×224 on each image during the inference process, and obtains the prediction score by averaging the scores of all crops for the robustness of the model. Despite these computational demands, the proposed CHPNet achieves superior prediction performance compared to state-of-the-art methods, justifying its increased complexity.

V. CONCLUSION

In this paper, a CHPNet-based AGIQA method is proposed to model the hierarchical visual perception and adaptive decision-making mechanisms of the human brain. The proposed CHPNet consists of two key components: an MCINet and an AHSNet. Specifically, the MCINet aligns and fuses multi-level visual and textual features to generate hierarchical quality-aware features. To further enhance semantic alignment, a CBSAM is designed to mitigate the semantic gap between modalities through multi-receptive-field feature extraction and bidirectional interaction. Meanwhile, the AHSNet evaluates the perceptual importance at each semantic level and dynamically assigns weights to individual quality scores for final prediction. Extensive experiments on three AGIQA databases demonstrate the effectiveness of the proposed CHPNet.

REFERENCES

[1] L. Li, J. Li, N. Islam, J. Z. Zhang, and A. Behl, "Empowering firms with AI-generated content: Strategic approaches to R&D and advertising in the era of generative AI," *IEEE Trans. Eng. Manag.*, vol. 72, pp. 1787–1798, 2025.

[2] A. A. Simiscuka, D. A. Ghadge, and G.-M. Muntean, "OmniScent: An omnidirectional olfaction-enhanced virtual reality 360° video delivery solution for increasing viewer quality of experience," *IEEE Trans. Broadcast.*, vol. 69, no. 4, pp. 941–950, Dec. 2023.

[3] F. Yuan, J. Lei, Z. Pan, B. Peng, and H. Xie, "λ-domain rate control via wavelet-based residual neural network for VVC HDR intra coding," *IEEE Trans. Image Process.*, vol. 33, pp. 6189–6203, 2024.

[4] M. M. Climent, M. Martos, Á. Egea, and S. F. Langa, "Social VR with holographic comms: Enablers for new engaging experiences within the TV/video consumption landscape," *IEEE Trans. Broadcast.*, vol. 71, no. 3, pp. 793–807, Sep. 2025.

[5] Z. Pan et al., "Efficient chroma intra prediction via exemplar colorization network for versatile video coding," *IEEE Trans. Multimedia*, vol. 27, pp. 4713–4724, 2025.

[6] A. S. S. Chaubet et al., "TV 3.0: An overview," *IEEE Trans. Broadcast.*, vol. 71, no. 1, pp. 1–8, 2025.

[7] Z. Pan et al., "JND-LIC: Learned image compression via just noticeable difference for human visual perception," *IEEE Trans. Broadcast.*, vol. 71, no. 1, pp. 217–228, Mar. 2025.

[8] G. Wang et al., "No-reference multi-level video quality assessment metric for 3D-synthesized videos," *IEEE Trans. Broadcast.*, vol. 70, no. 2, pp. 584–596, Jun. 2024.

[9] A. K. Moorthy and A. C. Bovik, "Blind image quality assessment: From natural scene statistics to perceptual quality," *IEEE Trans. Image Process.*, vol. 20, no. 12, pp. 3350–3364, Dec. 2011.

[10] Y. Fang, K. Ma, Z. Wang, W. Lin, Z. Fang, and G. Zhai, "No-reference quality assessment of contrast-distorted images based on natural scene statistics," *IEEE Signal Process. Lett.*, vol. 22, no. 7, pp. 838–842, Jul. 2015.

[11] Q. Jiang, F. Shao, W. Lin, K. Gu, G. Jiang, and H. Sun, "Optimizing multistage discriminative dictionaries for blind image quality assessment," *IEEE Trans. Multimedia*, vol. 20, no. 8, pp. 2035–2048, Aug. 2018.

[12] L. Shen, B. Zhao, Z. Pan, B. Peng, S. Kwong, and J. Lei, "Channel recombination and projection network for blind image quality measurement," *IEEE Trans. Instrum. Meas.*, vol. 71, pp. 1–12, 2022.

[13] W. Zhang, K. Ma, J. Yan, D. Deng, and Z. Wang, "Blind image quality assessment using a deep bilinear convolutional neural network," *IEEE Trans. Circuits Syst. Video Technol.*, vol. 30, no. 1, pp. 36–47, Jan. 2020.

Authorized licensed use limited to: TIANJIN UNIVERSITY. Downloaded on January 13,2026 at 05:47:38 UTC from IEEE Xplore. Restrictions apply.

This article has been accepted for inclusion in a future issue of this journal. Content is final as presented, with the exception of pagination.

[14] S. Su et al., "Blindly assess image quality in the wild guided by a self-adaptive hyper network," in *Proc. IEEE/CVF Conf. Comput. Vis. Pattern Recognit. (CVPR)*, Jun. 2020, pp. 3664–3673.

[15] J. Ke, Q. Wang, Y. Wang, P. Milanfar, and F. Yang, "MUSIQ: Multi-scale image quality transformer," in *Proc. IEEE/CVF Int. Conf. Comput. Vis. (ICCV)*, Oct. 2021, pp. 5128–5137.

[16] L. Zheng, Y. Luo, Z. Zhou, J. Ling, and G. Yue, "CDINet: Content distortion interaction network for blind image quality assessment," *IEEE Trans. Multimedia*, vol. 26, pp. 7089–7100, 2024.

[17] W. Zhao, M. Li, L. Xu, Y. Sun, Z. Zhao, and Y. Zhai, "A multibranch network with multilayer feature fusion for no-reference image quality assessment," *IEEE Trans. Instrum. Meas.*, vol. 73, pp. 1–11, 2024.

[18] H. Zhu, L. Li, J. Wu, W. Dong, and G. Shi, "MetaIQA: Deep meta-learning for no-reference image quality assessment," in *Proc. IEEE/CVF Conf. Comput. Vis. Pattern Recognit. (CVPR)*, Jun. 2020, pp. 14131–14140.

[19] H. Zhu, L. Li, J. Wu, W. Dong, and G. Shi, "Generalizable no-reference image quality assessment via deep meta-learning," *IEEE Trans. Circuits Syst. Video Technol.*, vol. 32, no. 3, pp. 1048–1060, Mar. 2022.

[20] P. C. Madhusudana, N. Birkbeck, Y. Wang, B. Adsumilli, and A. C. Bovik, "Image quality assessment using contrastive learning," *IEEE Trans. Image Process.*, vol. 31, pp. 4149–4161, 2022.

[21] J. Shi, P. Gao, and J. Qin, "Transformer-based no-reference image quality assessment via supervised contrastive learning," in *Proc. AAAI Conf. Artif. Intell. (AAAI)*, 2023, pp. 4829–4837.

[22] J. Yuan et al., "TIER: Text-image encoder-based regression for AIGC image quality assessment," 2024, *arXiv:2401.03854*.

[23] H. Gao et al., "PrefIQA: Human preference learning for AI-generated image quality assessment," in *Proc. IEEE Int. Symp. Circuits Syst. (ISCAS)*, May 2024, pp. 1–5.

[24] P. Wang et al., "Large multi-modality model assisted AI-generated image quality assessment," in *Proc. 32nd ACM Int. Conf. Multimedia*, Oct. 2024, pp. 7803–7812.

[25] T. Zhou, S. Tan, W. Zhou, Y. Luo, Y.-G. Wang, and G. Yue, "Adaptive mixed-scale feature fusion network for blind AI-generated image quality assessment," *IEEE Trans. Broadcast.*, vol. 70, no. 3, pp. 833–843, Sep. 2024.

[26] J. Xia, L. He, B. Hu, B. Han, and X. Gao, "A two-stage AIGC image quality assessment with T2I correspondence and visual perception," in *Proc. IEEE Int. Conf. Acoust., Speech Signal Process. (ICASSP)*, Apr. 2025, pp. 1–5.

[27] H. Lin, X. Cheng, X. Wu, and D. Shen, "CAT: Cross attention in vision transformer," in *Proc. IEEE Int. Conf. Multimedia Expo. (ICME)*, Jul. 2022, pp. 1–6.

[28] Z. Pan et al., "DACNN: Blind image quality assessment via a distortion-aware convolutional neural network," *IEEE Trans. Circuits Syst. Video Technol.*, vol. 32, no. 11, pp. 7518–7531, Nov. 2022.

[29] L. Li, T. Song, J. Wu, W. Dong, J. Qian, and G. Shi, "Blind image quality index for authentic distortions with local and global deep feature aggregation," *IEEE Trans. Circuits Syst. Video Technol.*, vol. 32, no. 12, pp. 8512–8523, Dec. 2022.

[30] Z. Pan, F. Yuan, X. Wang, L. Xu, X. Shao, and S. Kwong, "No-reference image quality assessment via multibranch convolutional neural networks," *IEEE Trans. Artif. Intell.*, vol. 4, no. 1, pp. 148–160, Feb. 2023.

[31] S. Yang et al., "MANIQA: Multi-dimension attention network for no-reference image quality assessment," in *Proc. IEEE/CVF Conf. Comput. Vis. Pattern Recognit. Workshops (CVPRW)*, New Orleans, LA, USA, Jun. 2022, pp. 1190–1199.

[32] X. Lan et al., "Multilevel feature fusion for end-to-end blind image quality assessment," *IEEE Trans. Broadcast.*, vol. 69, no. 3, pp. 801–811, Sep. 2023.

[33] Z. Pan, F. Yuan, J. Lei, Y. Fang, X. Shao, and S. Kwong, "VCRNet: Visual compensation restoration network for no-reference image quality assessment," *IEEE Trans. Image Process.*, vol. 31, pp. 1613–1627, 2022.

[34] C. Chen et al., "TOPIQ: A top-down approach from semantics to distortions for image quality assessment," *IEEE Trans. Image Process.*, vol. 33, pp. 2404–2418, 2024.

[35] T. Zhou, S. Tan, B. Zhao, and G. Yue, "Multitask deep neural network with knowledge-guided attention for blind image quality assessment," *IEEE Trans. Circuits Syst. Video Technol.*, vol. 34, no. 8, pp. 7577–7588, Aug. 2024.

[36] B. Hu et al., "Blind image quality assessment with coarse-grained perception construction and fine-grained interaction learning," *IEEE Trans. Broadcast.*, vol. 70, no. 2, pp. 533–544, Jun. 2024.

[37] B. Hu, G. Zhu, L. Li, J. Gan, W. Li, and X. Gao, "Blind image quality index with cross-domain interaction and cross-scale integration," *IEEE Trans. Multimedia*, vol. 26, pp. 2729–2739, 2024.

[38] M. Heusel, H. Ramsauer, T. Unterthiner, B. Nessler, and S. Hochreiter, "GANs trained by a two time-scale update rule converge to a local Nash equilibrium," in *Proc. 31st Int. Conf. Neural Inf. Process. Syst. (NIPS)*. Red Hook, NY, USA: Curran Associates, 2017, pp. 6629–6640.

[39] M. Bińkowski, D. J. Sutherland, M. Arbel, and A. Gretton, "Demystifying MMD GANs," 2018, *arXiv:1801.01401*.

[40] J. Yang, J. Fu, W. Zhang, W. Cao, L. Liu, and H. Peng, "MoE-AGIQA: Mixture-of-experts boosted visual perception-driven and semantic-aware quality assessment for AI-generated images," in *Proc. IEEE/CVF Conf. Comput. Vis. Pattern Recognit. Workshops (CVPRW)*, Jun. 2024, pp. 6395–6404.

[41] B. Qu, H. Li, and W. Gao, "Bringing textual prompt to AI-generated image quality assessment," in *Proc. IEEE Int. Conf. Multimedia Expo. (ICME)*, Jul. 2024, pp. 1–6.

[42] Y. Zhang, M. Jia, W. Zhou, and Y. Yang, "Quality assessment of AI-generated image based on cross-modal correlation," in *Proc. 3rd Int. Conf. Image Process. Media Comput. (ICIPMC)*, May 2024, pp. 378–384.

[43] W. Wang et al., "PVT v2: Improved baselines with pyramid vision transformer," *Comput. Vis. Media*, vol. 8, no. 3, pp. 415–424, Sep. 2022.

[44] J. Deng, W. Dong, R. Socher, L.-J. Li, K. Li, and L. Fei-Fei, "ImageNet: A large-scale hierarchical image database," in *Proc. IEEE Conf. Comput. Vis. Pattern Recognit.*, Jun. 2009, pp. 248–255.

[45] J. Xu et al., "ImageReward: Learning and evaluating human preferences for text-to-image generation," in *Proc. Adv. Neural Inf. Process. Syst.*, 2023, pp. 15903–15935.

[46] B. Song et al., "MLFF-GAN: A multilevel feature fusion with GAN for spatiotemporal remote sensing images," *IEEE Trans. Geosci. Remote Sens.*, vol. 60, 2022, Art. no. 4410816.

[47] Z. Zhang, C. Li, W. Sun, X. Liu, X. Min, and G. Zhai, "A perceptual quality assessment exploration for AIGC images," in *Proc. IEEE Int. Conf. Multimedia Expo. Workshops (ICMEW)*, Jul. 2023, pp. 440–445.

[48] C. Li et al., "AGIQA-3K: An open database for AI-generated image quality assessment," *IEEE Trans. Circuits Syst. Video Technol.*, vol. 34, no. 8, pp. 6833–6846, Aug. 2024.

[49] J. Wang, H. Duan, J. Liu, S. Chen, X. Min, and G. Zhai, "AIGCIQA2023: A large-scale image quality assessment database for AI-generated images: From the perspectives of quality, authenticity and correspondence," in *Proc. Int. Conf. Artif. Intell. (CAAI)*, 2023, pp. 46–57.

[50] R. Rombach, A. Blattmann, D. Lorenz, P. Esser, and B. Ommer, "High-resolution image synthesis with latent diffusion models," in *Proc. IEEE/CVF Conf. Comput. Vis. Pattern Recognit. (CVPR)*, Jun. 2022, pp. 10674–10685.

[51] T. Xu et al., "AttnGAN: Fine-grained text to image generation with attentional generative adversarial networks," in *Proc. IEEE/CVF Conf. Comput. Vis. Pattern Recognit.*, Jun. 2018, pp. 1316–1324.

[52] R. Rombach, A. Blattmann, and B. Ommer, "Text-guided synthesis of artistic images with retrieval-augmented diffusion models," 2022, *arXiv:2207.13038*.

[53] A. Borji, "Generated faces in the wild: Quantitative comparison of stable diffusion, midjourney and DALL-E 2," 2022, *arXiv:2210.00586*.

[54] A. Ramesh, P. Dhariwal, A. Nichol, C. Chu, and M. Chen, "Hierarchical text-conditional image generation with CLIP latents," 2022, *arXiv:2204.06125*.

[55] A. Nichol et al., "GLIDE: Towards photorealistic image generation and editing with text-guided diffusion models," 2021, *arXiv:2112.10741*.

[56] Y. Zhou et al., "Towards language-free training for text-to-image generation," in *Proc. IEEE/CVF Conf. Comput. Vis. Pattern Recognit. (CVPR)*, Jun. 2022, pp. 17886–17896.

[57] L. Zhang, A. Rao, and M. Agrawala, "Adding conditional control to text-to-image diffusion models," in *Proc. IEEE/CVF Int. Conf. Comput. Vis. (ICCV)*, Oct. 2023, pp. 3813–3824.

[58] F. Bao et al., "One transformer fits all distributions in multi-modal diffusion at scale," in *Proc. Int. Conf. Mach. Learn. (ICML)*, 2023, pp. 1692–1717.

[59] Z. Pan et al., "Evaluating visual quality of autostereoscopic displays using an interactive perception network," *IEEE Trans. Instrum. Meas.*, vol. 74, pp. 1–17, 2025.

[60] R. R. Selvaraju, M. Cogswell, A. Das, R. Vedantam, D. Parikh, and D. Batra, "Grad-CAM: Visual explanations from deep networks via gradient-based localization," in *Proc. IEEE Int. Conf. Comput. Vis. (ICCV)*, Oct. 2017, pp. 618–626.

Authorized licensed use limited to: TIANJIN UNIVERSITY. Downloaded on January 13,2026 at 05:47:38 UTC from IEEE Xplore. Restrictions apply.

This article has been accepted for inclusion in a future issue of this journal. Content is final as presented, with the exception of pagination.

Zhaoqing Pan (Senior Member, IEEE) received the Ph.D. degree in computer science from the City University of Hong Kong, Hong Kong, in 2014. In 2013, he was a Visiting Scholar with the Department of Electrical Engineering, University of Washington, Seattle, WA, USA, for six months. He is currently a Professor with the School of Electrical and Information Engineering, Tianjin University, Tianjin, China. His research interests include video coding, image quality assessment, and machine learning. He serves as an Editorial Board Member for *Computers and Education: X Reality* (Elsevier) and *PLOS One*. He was the Lead Guest Editor of *Multimedia Tools and Applications* and *Security and Communication Networks*.

Yi Yang received the B.Eng. degree in communication engineering from Tiangong University, Tianjin, China, in 2023. She is currently pursuing the M.Eng. degree with the School of Electrical and Information Engineering, Tianjin University, Tianjin. Her research interests include image quality assessment and deep learning.

Feng Yuan received the B.Eng. and M.Phil. degrees in computer science and technology from Nanjing University of Information Science and Technology, Nanjing, China, in 2018 and 2021, respectively. He is currently pursuing the Ph.D. degree with the School of Electrical and Information Engineering, Tianjin University, Tianjin, China. His research interests include video coding, image quality assessment, and deep learning.

Haoran Xie (Senior Member, IEEE) received the Ph.D. degree in computer science from the City University of Hong Kong and the Ed.D. degree in digital learning from the University of Bristol. He is currently a Professor and the Person-in-Charge of the Division of Artificial Intelligence, the Associate Dean of the School of Data Science, and the Director of the LEO Dr. David P. Chan Institute of Data Science, Lingnan University, Hong Kong, China. He has published 451 research publications, including 268 journal articles. His research interests include natural language processing, computational linguistics, artificial intelligence in education, and educational technology. He has been selected as the World's Top 2% Scientists by Stanford University. He is the Editor-in-Chief of *Natural Language Processing Journal*, *Computers and Education: Artificial Intelligence*, and *Computers and Education: X Reality*.

Fu Lee Wang (Senior Member, IEEE) received the Ph.D. degree in systems engineering and engineering management from The Chinese University of Hong Kong, Hong Kong, in 2003. He is currently the Dean and a Professor with the School of Science and Technology, Hong Kong Metropolitan University, Hong Kong, China. He has authored or co-authored more than 300 publications and 40 grants with more than 80 million Hong Kong dollars. His research interests include image processing and information retrieval. He was the Chair of the ACM Hong Kong Chapter and the IEEE Hong Kong Section Computer Society.

Sam Kwong (Fellow, IEEE) received the B.S. degree in electrical engineering from The State University of New York, Buffalo, NY, USA, in 1983, the M.S. degree in electrical engineering from the University of Waterloo, Waterloo, ON, Canada, in 1985, and the Ph.D. degree from the University of Hagen, Germany, in 1996. From 1985 to 1987, he was a Diagnostic Engineer with Control Data Canada. He joined Bell Northern Research Canada as a Member of the Scientific Staff. In 1990, he became a Lecturer at the Department of Electronic Engineering, City University of Hong Kong, Hong Kong, China. Later, he was a Chair Professor at the Department of Computer Science, City University of Hong Kong. He is currently a Chair Professor with the School of Data Science, Lingnan University, Hong Kong. His research interests include video and image coding and evolutionary algorithms. He is a fellow of Canadian Academy of Engineering. He is an Associate Editor of IEEE TRANSACTIONS ON INDUSTRIAL ELECTRONICS and IEEE TRANSACTIONS ON INDUSTRIAL INFORMATICS.

Authorized licensed use limited to: TIANJIN UNIVERSITY. Downloaded on January 13,2026 at 05:47:38 UTC from IEEE Xplore. Restrictions apply.