Stream-ViT: Learning Streamlined Convolutions in Vision Transformer

Yingwei Pan, *Member, IEEE*, Yehao Li, Ting Yao, *Senior Member, IEEE*, Chong-Wah Ngo, *Senior Member, IEEE*, and Tao Mei, *Fellow, IEEE*

***Abstract*—Recently Vision Transformer (ViT) and Convolution Neural Network (CNN) start to emerge as a hybrid deep architecture with better model capacity, generalization, and latency trade-off. Most of these hybrid architectures often directly stack self-attention module with static convolution or fuse their outputs through two pathways within each block. Instead, we present a new Transformer architecture (namely Stream-ViT) to novelly integrate ViT with streamlined convolutions, i.e., a series of high-to-low resolution convolutions. The kernels of each convolution are dynamically learnt on a basis of current input features plus pre-learnt kernels throughout the whole network. The new architecture incorporates a critical pathway to streamline kernel generation that triggers the interactions between dynamically learnt convolutions across different layers. Moreover, the introduction of a layer-wise streamlined convolution is functionally equivalent to a squeezed version of multi-branch convolution structure, thereby improving the capacity of self-attention module with enlarged cardinality in a cost-efficient manner. We validate the superiority of Stream-ViT over multiple vision tasks, and its performances surpass state-of-the-art ViT and CNN backbones with comparable FLOPs.**

***Index Terms*—Vision transformer, self-attention learning, image recognition.**

I. Introduction

In RECENT years, Transformer architecture [1] has achieved widespread dominance in computer vision field, and brought forward milestone improvement for a series of vision tasks [2], [3], [4], [5], [6], [7], [8], [9], [10]. The basic self-attention block is at the core of Transformer architecture, which enables long-range interaction among visual tokens and thus enhances model capacity. In between, the seminal work of Vision Transformer (ViT) [5] builds up the foundation of the contemporary pure Transformer architecture by directly employing Transformer over image patches, and manages to achieve competitive performances for image recognition against CNN architectures. Nevertheless, the training of such pure Transformer architecture requires massive training data and longer training schedules, and often falls behind CNN counterparts under low data regime. As pointed out in [11], [12], [13], one probable reason is that the pure Transformer lacks the right inductive bias in modeling 2D regional structure among pixels, since the whole image is reformed as a sequence of visual tokens in self-attention procedure. Furthermore, the self-attention procedure in pure Transformer is usually slow for high-resolution inputs due to dense self-attention computations. In contrast, the basic convolutional operators in CNN naturally impose spatial locality and scale/distortion invariance, and thus nicely reflect the right inductive bias of 2D regional structure modeling.

To mitigate the inductive bias and cost issues in ViT, recent advances [11], [12], [14], [15], [16], [17] then turn their focus on investigating how to incorporate the inductive bias of CNN into ViT and meanwhile to reduce self-attention computations with down-sampling via convolution. In this way, the hybrid architecture of convolution-augmented Transformer leads to better balance between model capacity, generalization, and latency. Among these attempts, many consider directly stacking self-attention module with static convolution or fusing the outputs of them within each Transformer block. For instance, CvT [11] plugs convolution before multi-head self-attention module within each Transformer block to perform convolutional operation over 2D-reshaped token map, as shown in Fig. 1(a). ViTAE [12] (Fig. 1(b)) aggregates the outputs of multi-head self-attention module with an additional convolution pathway in parallel, aiming to jointly capture global and regional dependencies among visual tokens. Instead of exploiting convolution before multi-head self-attention, CeiT [14] (Fig. 1(c)) upgrades the following feed-forward layer with an additional convolutional operation. However, the aforementioned methods hinge on the typical convolution to impose inductive bias within each Transformer block, and the learnt kernels are statically fixed for each resolution after training. Such independent modeling of inductive bias within each block still ignores the inherent dependency across the inductive bias of different blocks with multi-resolution inputs.

In an effort to alleviate these limitations, in this paper, we devise a new hybrid Transformer architecture called Vision Transformer with Streamlined Convolutions (Stream-ViT). Our launching point is to introduce the streamlined dependencies among the inductive bias of different blocks for dynamically assigning kernels to streamlined convolutions. Stream-ViT is

Received 15 July 2023; revised 9 April 2024; accepted 15 October 2024. Date of publication 27 January 2025; date of current version 9 June 2025. This work was supported in part by the Beijing Municipal Science and Technology under Grant Z241100001324002 and in part by the Beijing Nova Program under Grant 20240484681. The associate editor coordinating the review of this article and approving it for publication was Prof. Qing Yang. *(Corresponding author: Ting Yao.)*

Yingwei Pan, Yehao Li, Ting Yao, and Tao Mei are with the HiDream.ai, Beijing 100071, China (e-mail: panyw.ustc@gmail.com; yehaoli.sysu@gmail.com; tingyao.ustc@gmail.com; tmei@live.com).

Chong-Wah Ngo is with the School of Information Systems, Singapore Management University, Singapore 188065 (e-mail: cwngo@smu.edu.sg).

Digital Object Identifier 10.1109/TMM.2025.3535321

1520-9210 © 2025 IEEE. All rights reserved, including rights for text and data mining, and training of artificial intelligence and similar technologies. Personal use is permitted, but republication/redistribution requires IEEE permission. See https://www.ieee.org/publications/rights/index.html for more information.

Authorized licensed use limited to: TIANJIN UNIVERSITY. Downloaded on December 26,2025 at 12:47:22 UTC from IEEE Xplore. Restrictions apply.

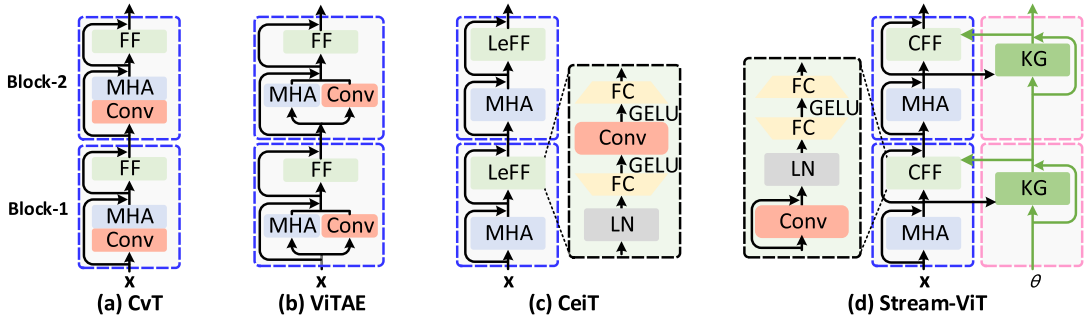

Fig. 1. Illustration of convolution-augmented Transformer block in (a) Convolutional vision Transformer (CvT), (b) Vision Transformers Advanced by Exploring Intrinsic Inductive Bias (ViTAE), (c) Convolution-enhanced image Transformer (CeiT), and (d) our streamlined Transformer block in Stream-ViT. MHA: multi-head self-attention; FF: feed-forward layer; Conv: Convolution; LeFF: locally-enhanced feed-forward layer; LN: layer normalization; GELU: gaussian error linear units; FC: fully-connected layer; CFF: convolutional feed-forward layer; KG: streamlined kernel generation; **x**: input features; θ: learnt kernels of depth-wise convolutions in CFF.

henceforth able to learn specialized kernels of each resolution with additional guidance from the learnt kernels of previous Transformer blocks. Especially, as showed in Fig. 1(d), our streamlined Transformer block in Stream-ViT consists of two pathways. One is the hybrid Transformer pathway that upgrades the feed-forward layer with additional depth-wise convolutions (i.e., our Convolutional Feed-Forward (CFF) layer) to capture inductive bias. The other is the streamlined Kernel Generation (KG) pathway that collects the current input features ($\mathbf{x}$) plus the learnt kernels of depth-wise convolutions (θ) in the previous block. The goal is to dynamically produce specialized kernels of depth-wise convolutions in the current block. It is worthy to note that we also unveil another interesting interpretation behind such streamlined convolutions with learnable kernels. This design of streamlined convolutions can be regarded as Inception-like multi-branch convolution structure, and thus efficiently strengthens the capacity of self-attention module with enlarged cardinality.

Our Stream-ViT has been properly analyzed and verified through extensive experiments over multiple vision tasks (e.g., image recognition, object detection and instance segmentation), which demonstrate its superiority against state-of-the-art ViT and CNN backbones. More remarkably, under comparable resource constraints in Large model size, Stream-ViT achieves 85.2% top-1 accuracy on ImageNet for image recognition, which absolutely improves PVT (83.8%) with 1.4%. For object detection and instance segmentation on COCO, Stream-ViT in Base model size absolutely surpasses PVT with 1.2% and 1.3% mAP, with about 30% less parameters.

II. Related Work

The related works can be briefly grouped into three categories: Convolutional Neural Network (CNN), Vision Transformer (ViT), and Hybrid (CNN + ViT) Architectures.

A. CNN Architectures

In the last decade, CNN architectures have dominated the construction of backbones in vision tasks. Starting from the breakthrough achieved by AlexNet [18] on ImageNet benchmark, a series of CNN backbones [19], [20], [21], [22], [23], [24], [25], [26] have been engineered subsequently. For instance, VGG [21] strengthens model capability by increasing the network depth, and ResNets [19] further enables the training of very deep networks (152 layers) with additional skip connections. Besides the evolution of making network deeper, another direction is to design multi-branch convolution block. In particular, GoogLeNet [22] and InceptionNet [23] integrate multiple kernel paths within a single block via split-transform-merge strategy. ResNeXt [26] presents a homogeneous and multi-branch architecture. SKNet [20] aggregates multiple paths with different kernel sizes through attention mechanism. In addition, the light-weight CNN architectures in the mobile platform (e.g., MobileNets [27]) commonly capitalize on the depth-wise convolution due to its lower computational cost. Recently, EfficientNet [24] introduces high-quality auto-searched CNN architectures that achieve a better balance between network width, depth, and resolution.

B. ViT Architectures

Inspired by the success of Transformer [1] in natural language processing field, the computer vision community witnesses a surge of ViT backbones with pure Transformer structure in varied tasks. Vision Transformer (ViT) [5] is one of the early attempts that design pure Transformer architecture by directly operating self-attention over the sequence of image patches (i.e., visual tokens). PiT [28] presents a multi-scale version of ViT that enables self-attention learning from high- to low-resolution. Swin [6] leverages the shifted windowing scheme to restrict self-attention within local windows while allowing for cross-window connections. PVT [7], [29] designs a pyramid structure of ViT that produces multi-scale feature maps in four stages. In order to reduce the heavy computational costs for multi-scale self-attention, PVT adopts down-sampling operations to significantly reduce the scale of input keys/values. Twins [4] involves additional locally-grouped self-attention layer before down-sampling operations to enhance model capacity via intra-region interaction.

C. CNN + ViT Architectures

Recently, both of the two worlds (CNN and ViT) start to interact with each other, yielding numerous hybrid vision backbones. Early attempts commonly remould CNN blocks

Authorized licensed use limited to: TIANJIN UNIVERSITY. Downloaded on December 26,2025 at 12:47:22 UTC from IEEE Xplore. Restrictions apply.

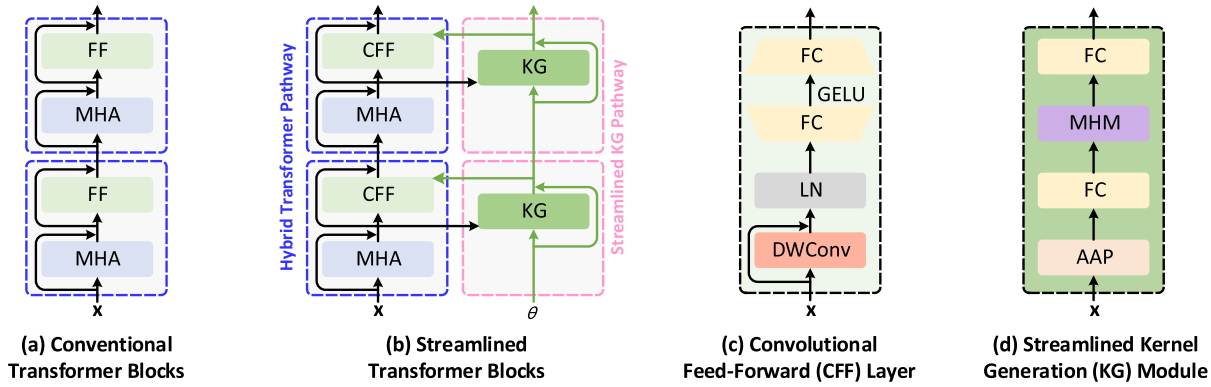

Fig. 2. The detailed architectures of (a) conventional Transformer blocks, and (b) streamlined Transformer blocks, (c) convolutional feed-forward (CFF) layer, (d) streamlined kernel generation (KG) module in our streamlined Transformer block in Stream-ViT. DWConv: depth-wise convolution; AAP: adaptive average pooling; MHM: multi-head token-mixer.

by replacing some convolutional operations with self-attention module. For example, AA-ResNet [30] integrates convolutional operators with global self-attention learning. Instead, local self-attention learning is employed over each local patch in CNN architectures [31], [32], [33], targeting for effectively reducing the dense self-attention computations. Later on, after witnessing the success of ViT [5], another direction of constructing hybrid architectures [11], [12], [14], [34], [35], [36], [37], [38], i.e., augmenting ViT with convolutional operations, begins to emerge. For example, CvT [11] and CeiT [14] plugs convolutions into self-attention module or feed-forward layer, respectively. ViTAE [12] fuses the outputs of self-attention module and convolution within each Transformer block. The goal of them is to endow ViT with the right inductive bias of 2D regional structure modeling.

D. Summary

Our Stream-ViT is also a type of hybrid architecture that integrates ViT with convolutions. Compared to the existing hybrid architectures (e.g., [11], [12], [14], [36]) that heavily rely on the static and independent convolution within each block, Stream-ViT dynamically learns specialized convolution for each Transformer block via streamlined kernel generation. Such streamlined kernel generation effectively enables the exploitation of dependencies among the inductive bias across different resolutions. In addition, the design of streamlined convolutions also serve as a light-weight variant of Inception-like multi-branch convolution structure, thereby enhancing the model capacity of self-attention module.

III. Method

This section begins with a brief review of the conventional Transformer block adopted in the existing ViTs. Next, in an effort to impose inductive bias of 2D regional structure modeling across different resolutions, we novelly design the streamlined Transformer blocks that integrate conventional Transformer blocks with streamlined convolutions (i.e., a series of depth-wise convolutions in high-to-low resolutions). Specifically, in the streamlined Transformer block, a new Convolutional Feed-Forward (CFF) layer is devised to upgrade typical feed-forward layer with the streamlined depth-wise convolution. The kernels of this depth-wise convolution are dynamically learnt via a streamlined kernel generation module, where the module resides in a different pathway responsible for mining the inductive bias dependency among blocks. Finally, after applying streamlined Transformer blocks over multi-scale features in a four-stage Transformer architecture, we elaborate a new hybrid Transformer backbone, i.e., Vision Transformer with Streamlined Convolutions (Stream-ViT).

A. Conventional Transformer Block

The commonly adopted Transformer block in existing ViTs (e.g., [5], [39]) is composed of a multi-head attention layer (**MHA**) and a feed-forward layer (**FF**), as illustrated in Fig. 2(a). Here the MHA layer learns to capture long-range dependencies among visual tokens via a self-attention mechanism, and the FF layer performs non-linear transformation and dimensional expansion or reduction for each token. In addition, Layer Normalization (**LN**) is applied before feeding the visual tokens into each block. Formally, let $x_l \in \mathbb{R}^{n\times d}$ represent the input features, where $n = H \times W$ is the number of visual tokens and $H/W/d$ denotes the height/width/channel number respectively. The MHA layer in the l-th Transformer block first operates as follows:

$$\begin{aligned} &x_l^a = \mathbf{MHA}(x_l^n, x_l^n, x_l^n) + x_l, \quad x_l^n = \mathbf{LN}(x_l), \\ &\mathbf{MHA}(q,k,v) = \mathbf{Attention}(qW^Q, kW^K, vW^V), \\ &\mathbf{Attention}(\mathbf{Q},\mathbf{K},\mathbf{V}) = \mathbf{softmax}\left(\frac{\mathbf{Q}\mathbf{K}^T}{\sqrt{d_k}}\right)\mathbf{V}, \end{aligned} \tag{1}$$

where W^Q, W^K, W^V are weight matrices, and d_k is the key dimension. Next, the following FF layer performs feature transformation for each token via two fully-connected (FC) layers coupled with a GELU activation in between:

$$\begin{aligned} x_{l+1} &= \mathbf{FF}(x_l^a) = \mathbf{FC}(\tilde{x}_l) + x_l^a, \\ \tilde{x}_l &= \sigma(\mathbf{FC}(\mathbf{LN}(x_l^a))), \end{aligned} \tag{2}$$

Authorized licensed use limited to: TIANJIN UNIVERSITY. Downloaded on December 26,2025 at 12:47:22 UTC from IEEE Xplore. Restrictions apply.

where $\mathbf{FC}$ and σ denotes the fully-connected layer and GELU activation, respectively.

B. Streamlined Transformer Block

As inductive bias in 2D regional structure modeling is overlooked by the conventional Transformer blocks, the recent works [11], [12], [14] begin to unify convolutional operations and Transformer structure. This unification takes advantage of both 2D regional structure modeling with inductive bias in CNN and long-range dependency mining via self-attention mechanism. Nevertheless, those methods rely on the typical static convolution to impose inductive bias within each Transformer block, while leaving the inherent dependency across the inductive bias of different blocks not fully explored. To mitigate this issue, we design a principled hybrid Transformer block namely streamlined Transformer block. This new block upgrades feed-forward layer with streamlined convolution, which is dynamically learnt through streamlined kernel generation in another pathway. Fig. 2(b) depicts the architecture of streamlined Transformer block. Specifically, the streamlined Transformer block contains two pathways: hybrid Transformer pathway and streamlined Kernel Generation (**KG**) pathway. The hybrid Transformer pathway consists of MHA layer and our newly minted Convolutional Feed-Forward (**CFF**) layer, which incorporates the dynamically learnt depth-wise convolution into conventional feed-forward layer to capture inductive bias. The KG pathway collects the current inputs and the learnt kernels of depth-wise convolution in previous block, and then generates specialized kernels of depth-wise convolution for the current block.

Convolutional Feed-Forward Layer: We implement CFF layer as one dynamically learnt depth-wise convolution plus two fully-connected layers (Fig. 2(c)). Note that inspired by [40], we upgrade depth-wise convolution and increase the kernel size to enlarge receptive field. Technically, given the input features x_l^a, the $\mathbf{CFF}$ layer in the l-th streamlined Transformer block operates as follows:

$$\begin{aligned}\mathbf{CFF}(x_l^a) &= \mathbf{FC}(\tilde{x}_l) + x_l^a,\\ \tilde{x}_l &= \sigma(\mathbf{FC}(x_l')),\\ x_l' &= \mathbf{LN}(\mathbf{DWConv}(x_l^a, \theta_l) + x_l^a),\end{aligned} \tag{3}$$

where $\mathbf{DWConv}$ and θ_l denotes the depth-wise convolution operation (kernel size: 7×7) and the corresponding learnt kernels in the l-th block, respectively.

Streamlined Kernel Generation: The modules along the KG pathway are devised to produce the specialized kernels of depth-wise convolution for the corresponding CFF layers. Fig. 2(d) illustrates the detailed architecture. Given the input features x_l^a, we first utilize adaptive average pooling ($\mathbf{AAP}$) to down-sample x_l^a into the reduced size of $K_h \times K_w$. Next, similar to the conventional feed-forward layer, we employ a fully-connected layer ($\mathbf{FC}$) followed by a GELU activation (σ) to expand the channel dimension of kernel. Furthermore, we employ the token-mixer layer like MLP-Mixer [41] by applying MLPs across spatial locations to encourage spatial interaction within the inputs. However, such token-mixer layer does not fully exploit spatial interaction for sharing the same parameters across all channels of inputs. As an alternative, in analogy to multi-head self-attention, here we design a Multi-Head token-Mixer ($\mathbf{MHM}$) layer that only shares the same parameters within a sub-group of channels for each head. Our design provides a better trade-off between parameter budget and flexibility. Subsequently, we leverage a softmax followed by a fully-connected layer $\mathbf{FC^n}$ to produce the output kernels. Please note that the parameters of $\mathbf{FC^n}$ is normalized by group normalization. In addition, we adopt a residual connection to each streamlined kernel generation module to strengthen kernel information propagation by aggregating the output kernels with the learnt kernels θ_{l-1} in the previous module. Accordingly, the overall operations of streamlined kernel generation module are summarized as follows:

$$\begin{aligned}x_l^p &= \mathbf{AAP}(x_l^a),\ \ \tilde{x}_l = \sigma(\mathbf{FC}(x_l^p))\\ z_l &= \mathbf{MHM}(\tilde{x}_l) = \mathbf{Concat}(head_1, \ldots, head_{hd}),\\ head_i &= \mathbf{SFC}(\tilde{x}_l^i),\\ \theta_l &= \tilde{\theta}_l + \theta_{l-1},\ \ \tilde{\theta}_l = \mathbf{FC^n}(\mathbf{softmax}(z_l)),\end{aligned} \tag{4}$$

where $\tilde{x}_l$ is divided into hd parts with equal size and $\tilde{x}_l^i$ is the i-th part of $\tilde{x}_l$, $\mathbf{Concat}(.)$ denotes the concatenation operation, and $\mathbf{SFC}$ is the spatial fully-connected layer that performs matrix multiplications across spatial locations.

C. Analysis

In this section, we discuss the connections and differences between our streamlined Transformer block and the precedent relevant network designs. The discussions provide a novel view to interpret the streamline design.

Multi-Branch Convolution Structure [26], [42] is a common design principle in CNN that employs multiple branches to enhance the representational capacity with enlarged cardinality. For instance, ResNeXt [26] aggregates a set of branches with the same topology by group convolution. DBB [42] adopts diverse branches with different scales and converts them into a single convolutional operation after training. Here we would like to emphasize that our streamlined convolution in CFF layer can be decomposed into a group of multiple convolutional branches with the same topology. In this sense, the streamlined convolution is equivalent to a squeezed version of multi-branch convolution structure. Specifically, for the streamlined convolution with the inputs x_l^a in the l-th CFF layer, its kernel θ_l is recursively learnt by combining current kernel prediction $\tilde{\theta}_l$ and the kernel θ_{l-1} in previous block through KG pathway (see (4)). After unrolling the recursion in streamlined kernel generation, the learnt kernel θ_l can be formulated as the sum of kernel predictions of all the previous blocks:

$$\begin{aligned}\theta_l &= \tilde{\theta}_l + \theta_{l-1} = \tilde{\theta}_l + \tilde{\theta}_{l-1} + \theta_{l-2}\\ &= \tilde{\theta}_l + \tilde{\theta}_{l-1} + \tilde{\theta}_{l-2} + \cdots + \theta_1\\ &= \sum_{j=1}^{l} \tilde{\theta}_j.\end{aligned} \tag{5}$$

Since convolutional operation is linear, the result of applying streamlined convolution (kernel θ_l) over x_l^a is thus equivalent to

Authorized licensed use limited to: TIANJIN UNIVERSITY. Downloaded on December 26,2025 at 12:47:22 UTC from IEEE Xplore. Restrictions apply.

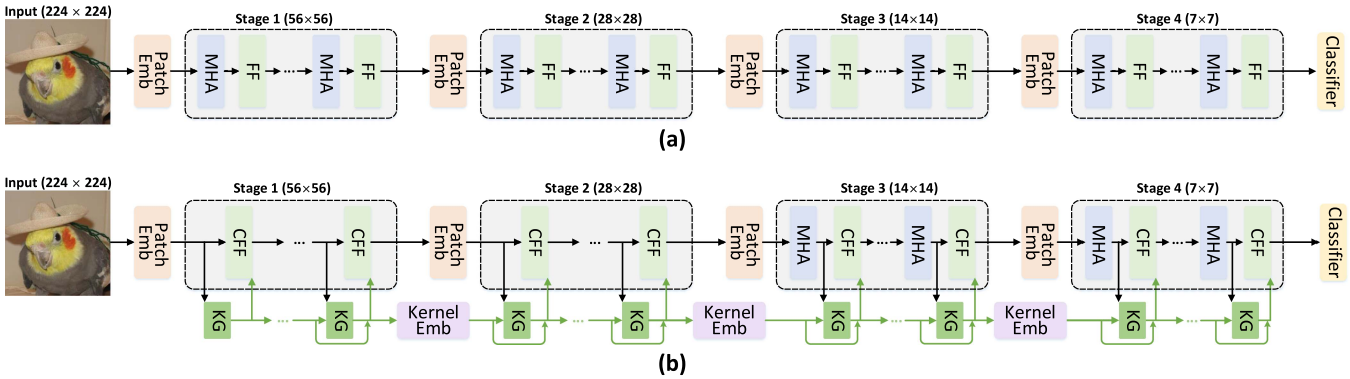

Fig. 3. Comparison between the overall architectures of (a) Conventional Vision Transformer and (b) our Vision Transformer with Streamlined Convolutions (Stream-ViT).

the sum of outputs from multiple convolutional branches with kernels $\tilde{\theta}_j$:

$$Conv(x_l^a, \theta_l) = Conv\left(x_l^a, \sum_{j=1}^{l} \tilde{\theta}_j\right) = \sum_{j=1}^{l} Conv(x_l^a, \tilde{\theta}_j). \quad (6)$$

Online Re-parameterization [43] squeezes the kernels of multiple branches into a single convolution by introducing a channel-wise linear scaling operation after convolutional branches to maintain the optimization diversity. This design effectively reduces the computational cost from $\mathcal{O}(H \times W)$ to $\mathcal{O}(K_H \times K_W)$, where K_H/K_W is the height/width of the squeezed kernel. Similarly, as shown in (6), our streamlined convolution (kernel θ_l) in CFF layer can also be regarded as a squeezed kernel that reflects the aggregation of kernels $\tilde{\theta}_j$ from multiple convolutional branches. The optimization diversity of each convolutional branch is guaranteed by group normalization.

Dynamic Convolution [44], [45], [46], [47] dynamically learns specialized kernels of convolutions in CNN networks. Our streamlined convolution can also be treated as one kind of dynamic convolutions. Nevertheless, the existing dynamic convolutions perform kernel generation independently (only based on the current input features) within each block/layer, thus ignoring the inherent dependency across the inductive bias of different blocks/layers with multi-resolution inputs. In contrast, streamlined convolution produces kernels of each Transformer block with additional guidance from the learnt kernels of previous blocks. The streamlined dependencies among the inductive bias of different blocks are elegantly exploited for kernel generation in the hybrid backbones.

D. Stream-Vit

The existing multi-scale ViT backbones [6], [29] (see Fig. 3(a)) commonly consist of four stages with high-to-low resolution inputs. Following this basic network configuration, we construct our complete Stream-ViT (Fig. 3(b)) by applying streamlined Transformer blocks over multi-scale inputs in the four-stage architecture. Specifically, for the first two stages with high-resolution inputs (56×56 and 28×28), we directly remove the cumbersome multi-head self-attention (MHA) layer and only utilize the proposed convolutional feed-forward (CFF) layer. The last two stages with low-resolution inputs (14×14 and 7×7) are comprised of a stack of our streamlined Transformer block (MHA&CFF). Note that inspired by the design principle of ResNet [19] and PVT [7], we employ a patch embedding layer (i.e., a convolution layer followed by layer normalization) to control the scale of input feature map via progressive shrinking strategy: progressively shrinking spatial resolution and increasing channel dimensions of input feature map from earlier stage to later stage. In general, we present four variants of Stream-ViT with different model sizes, i.e., Stream-ViT-T (tiny size), Stream-ViT-S (small size), Stream-ViT-B (base size), and Stream-ViT-L (large size). Table I details the architectures of all the four Stream-ViT variants, where E_i, C_i, and HD_i are the expansion ratio of CFF layer, channel dimension, and the head number in the multi-head self-attention in stage i.

IV. Experiments

In this section, we fully evaluate the effectiveness of Stream-ViT for image recognition, object detection, and instance/semantic segmentation tasks. Specifically, we first train our Stream-ViT from scratch on ImageNet1K dataset [63] for image recognition task. Next, we fine-tune the pre-trained Stream-ViT for downstream tasks (e.g., object detection and instance segmentation on COCO dataset [64], and semantic segmentation on ADE20 K dataset [65]).

A. Image Recognition

1) Settings: For image recognition task, we adopt ImageNet1K that consists of 1.28 million training images and 50 K validation images over 1,000 object categories. During training, we follow the data pre-processing pipeline in [6], including CutOut [66] and RandAug [67] for data augmentation. The whole architecture is optimized with AdamW optimizer [68] (momentum: 0.9, batch size: 1,024, learning rate: 0.001, weight decay: 0.05) on 8 V100 GPUs. The overall optimization process is composed of 300 epochs with cosine decay learning rate

Authorized licensed use limited to: TIANJIN UNIVERSITY. Downloaded on December 26,2025 at 12:47:22 UTC from IEEE Xplore. Restrictions apply.

TABLE I
THE DETAILED ARCHITECTURE SPECIFICATIONS FOR OUR STREAM-VIT VARIANTS IN DIFFERENT MODEL SIZES, I.E., STREAM-VIT-T (TINY SIZE), STREAM-VIT-S (SMALL SIZE), STREAM-VIT-B (BASE SIZE), AND STREAM-VIT-L (LARGE SIZE)

Specification		Stream-ViT-T	Stream-ViT-S	Stream-ViT-B	Stream-ViT-L
Patch Embedding		4×4	4×4	4×4	4×4
Stage 1 ($\frac{H}{4} \times \frac{W}{4}$)	**CFF**	$\begin{bmatrix} E_1 = 5 \\ C_1 = 64 \end{bmatrix} \times 1$	$\begin{bmatrix} E_1 = 5 \\ C_1 = 64 \end{bmatrix} \times 1$	$\begin{bmatrix} E_1 = 5 \\ C_1 = 96 \end{bmatrix} \times 3$	$\begin{bmatrix} E_1 = 5 \\ C_1 = 192 \end{bmatrix} \times 4$
Patch Embedding		2×2	2×2	2×2	2×2
Stage 2 ($\frac{H}{8} \times \frac{W}{8}$)	**CFF**	$\begin{bmatrix} E_2 = 4 \\ C_2 = 128 \end{bmatrix} \times 2$	$\begin{bmatrix} E_2 = 6 \\ C_2 = 128 \end{bmatrix} \times 3$	$\begin{bmatrix} E_2 = 5 \\ C_2 = 192 \end{bmatrix} \times 3$	$\begin{bmatrix} E_2 = 5 \\ C_2 = 224 \end{bmatrix} \times 4$
Patch Embedding		2×2	2×2	2×2	2×2
Stage 3 ($\frac{H}{16} \times \frac{W}{16}$)	**MHA &CFF**	$\begin{bmatrix} E_3 = 4 \\ C_3 = 256 \\ HD_3 = 4 \end{bmatrix} \times 7$	$\begin{bmatrix} E_3 = 5 \\ C_3 = 320 \\ HD_3 = 5 \end{bmatrix} \times 8$	$\begin{bmatrix} E_3 = 4 \\ C_3 = 320 \\ HD_3 = 5 \end{bmatrix} \times 17$	$\begin{bmatrix} E_3 = 3 \\ C_3 = 448 \\ HD_3 = 7 \end{bmatrix} \times 26$
Patch Embedding		2×2	2×2	2×2	2×2
Stage 4 ($\frac{H}{32} \times \frac{W}{32}$)	**MHA &CFF**	$\begin{bmatrix} E_4 = 5 \\ C_4 = 512 \\ HD_4 = 8 \end{bmatrix} \times 2$	$\begin{bmatrix} E_4 = 5 \\ C_4 = 640 \\ HD_4 = 10 \end{bmatrix} \times 2$	$\begin{bmatrix} E_4 = 5 \\ C_4 = 640 \\ HD_4 = 10 \end{bmatrix} \times 3$	$\begin{bmatrix} E_4 = 6 \\ C_4 = 640 \\ HD_4 = 10 \end{bmatrix} \times 4$

E_i, C_i, and HD_i is the expansion ratio of CFF layer, channel dimension, and the head number in the multi-head self-attention in stage i.

TABLE II
COMPARISON RESULTS OF STREAM-VIT WITH OTHER STATE-OF-THE-ART VISION BACKBONES ON IMAGENET FOR IMAGE RECOGNITION (INPUT IMAGE RESOLUTION: 224×224)

Network	Params	GFLOPs	Speed	Memory	Top-1	Top-5	V2 Top-1	Network	Params	GFLOPs	Speed	Memory	Top-1	Top-5	V2 Top-1
Tiny								Small							
ConViT-Ti+ [49]	10.0M	2.0	-	-	76.7	-	-	ResNet-50 [19]	25.5M	4.1	3947	2802	79.8	-	-
ViTAE-6M [12]	6.5M	2.0	1635	711	77.9	94.1	-	Swin-T [6]	29.0M	4.5	1637	1382	81.2	95.5	69.7
PVTv2-B1 [7]	13.1M	2.1	1522	1269	78.7	94.5	66.9	Conformer-Ti [50]	23.5M	5.2	1305	1169	81.3	-	-
PVT-S [29]	24.5M	3.8	-	726	79.8	-	-	DeiT-S [39]	22.1M	4.6	2245	424	81.4	-	-
ConT-M [51]	19.2M	3.1	-	-	80.2	-	-	CvT-13 [11]	20.0M	4.5	1954	1465	81.6	-	-
RegionViT-Ti [52]	13.8M	2.4	1498	768	80.4	95.2	69.2	SE-CoTNetD-50 [53]	23.1M	4.1	2687	5003	81.6	95.8	71.5
PiT-S [28]	23.5M	2.9	-	-	80.9	-	-	ViTAE-S [12]	23.6M	5.6	870	917	82.0	95.9	-
ViTAE-13M [12]	13.2M	3.4	1361	735	81.0	95.4	-	CeiT-S [14]	24.2M	4.8	1537	1825	82.0	95.9	-
Twins-PCPVT-S [4]	24.1M	3.7	1528	1302	81.2	95.7	70.3	PVTv2-B2 [7]	25.4M	4.0	1296	1312	82.0	95.6	71.6
RegionViT-Ti+ [52]	14.3M	2.7	724	823	81.5	-	-	ConvNeXt-T [40]	29M	4.5	-	-	82.1	-	-
EfficientNet-B3 [24]	12.0M	1.8	-	-	81.6	95.7	-	Visformer-S [54]	40.2M	4.9	2128	5943	82.2	-	-
Twins-SVT-S [4]	24.0M	2.8	2031	920	81.7	-	-	UniFormer-S [55]	22M	3.6	-	-	82.9	-	-
Stream-ViT-T	22.3M	2.7	2068	1491	**82.5**	**96.1**	**71.7**	Stream-ViT-S	39.2M	4.6	1547	2277	**83.6**	**96.6**	**72.7**
Base								Large							
ResNet-101 [19]	44.6M	7.9	2563	2912	81.3	-	-	ResNet-152 [19]	60.2M	11.6	1827	3004	81.8	-	-
T2T-ViTt-19 [56]	39.2M	9.8	979	4190	82.2	96.1	71.7	ConViT-B [49]	86.5M	16.8	-	1416	82.4	95.9	-
CvT-21 [11]	32.0M	7.1	1284	1536	82.5	-	-	T2T-ViTt-24 [56]	64.1M	15.0	773	4337	82.6	95.9	71.8
CaiT-S24 [57]	46.9M	9.4	-	-	82.7	-	-	TNT-B [58]	65.6M	14.1	-	-	82.9	96.3	-
ConvNeXt-S [40]	50M	8.7	-	-	83.1	-	-	CaiT-S36 [57]	68.4M	13.9	-	-	83.3	-	72.5
Swin-S [6]	50.0M	8.7	1056	1506	83.2	96.2	72.1	Swin-B [6]	88.0M	15.4	851	2117	83.5	96.5	72.3
Twins-SVT-B [4]	56.1M	8.6	1012	1899	83.2	96.3	72.6	Twins-SVT-L [4]	99.3M	15.1	817	3191	83.7	96.5	73.4
PVTv2-B3 [7]	45.2M	6.9	915	1425	83.2	96.5	73.0	DeiT-B [39]	86.6M	17.6	1151	1060	83.8	-	-
SE-CoTNetD-101 [53]	40.9M	8.5	1075	5106	83.2	96.5	73.0	Focal-Base [59]	89.8M	16.0	241	5052	83.8	96.5	73.4
CoAtNet-1 [36]	42M	8.4	-	-	83.3	-	-	PVTv2-B5 [7]	82.0M	11.8	640	1415	83.8	96.6	73.4
Conformer-S [50]	37.7M	10.6	992	1972	83.4	-	-	SE-CoTNetD-152 [53]	55.8M	17.0	732	6886	84.0	97.0	73.8
RegionViT-M+ [52]	42.0M	7.9	-	1256	83.4	-	-	Conformer-B [50]	83.3M	23.3	653	3835	84.1	-	-
PVTv2-B4 [7]	62.6M	10.1	659	1522	83.6	96.7	73.5	ViTAEv2-B [60]	89.7M	24.3	446	4100	84.6	96.9	-
UniFormer-B [55]	50M	8.3	-	-	83.9	-	-	Stream-ViT-L	116.9M	22.1	403	2859	**85.2**	**97.3**	**75.6**
EfficientNetV2-S [61]	22M	8.8	-	-	83.9	-	-	VOLO-D4† [62]	193.0M	43.8	316	2423	85.7	97.4	75.6
Stream-ViT-B	59.0M	8.9	770	2394	**84.6**	**97.0**	**74.7**	Stream-ViT-L†	117.6M	22.2	403	2859	**86.0**	**97.5**	**76.6**

We split all runs into four groups (tiny, small, base, large) according to GFLOPs. † denotes the use of additional token labeling objective via MixToken [48]. Speed denotes the number of processed examples per second at inference. Memory denotes the GPU memory usage (MiB).

scheduler [69] and 5 epochs of linear warm-up. We report Top-1 and Top-5 accuracies on ImageNet1K validation set for standard evaluation. In addition, we also report Top-1 accuracy (i.e., V2 Top-1) on ImageNet V2 matched frequency test set [70], which is a separate test set that makes it harder to overfit.

2) Performance Comparison: Table II summarizes the performances of our Stream-ViT under different model sizes (Stream-ViT-T/S/B/L). Considering that VOLO utilizes an advanced strategy with additional Token Labeling objective via MixToken [48], we implement an upgraded version of Stream-ViT, i.e., Stream-ViT-L†, that also adopts this strategy to enhance feature learning for fair comparison. In general, our Stream-ViT variants consistently outperform the state-of-the-art CNN/ViT backbones under all four model sizes. In particular, under Large size, the Top-1 accuracy of Stream-ViT-L without Token Labeling is 85.2%, which leads to the absolute improvement of 0.6% against ViTAEv2-B with less GFLOPs. When further equipped with Token Labeling strategy, Stream-ViT-L† achieves the Top-1

Authorized licensed use limited to: TIANJIN UNIVERSITY. Downloaded on December 26,2025 at 12:47:22 UTC from IEEE Xplore. Restrictions apply.

TABLE III
COMPARISON RESULTS OF STREAM-VIT WITH OTHER STATE-OF-THE-ART VISION BACKBONES ON COCO FOR OBJECT DETECTION (BASIC DETECTOR: RETINANET) AND INSTANCE SEGMENTATION (BASIC MODEL: MASK R-CNN)

Backbone	RetinaNet 1x [71]								Mask R-CNN 1x [72]							
	Params	GFLOPs	AP	AP_{50}	AP_{75}	AP_S	AP_M	AP_L	Params	GFLOPs	AP^b	AP^b_{50}	AP^b_{75}	AP^m	AP^m_{50}	AP^m_{75}
ResNet50 [19]	37.7M	111	36.3	55.3	38.6	19.3	40.0	48.8	44.2M	174	38.0	58.6	41.4	34.4	55.1	36.7
Swin-T [6]	38.5M	118	41.5	62.1	44.2	25.1	44.9	55.5	47.8M	177	42.2	64.6	46.2	39.1	61.6	42.0
Twins-SVT-S [4]	38.5M	118	43.0	64.2	46.3	28.0	46.4	57.5	47.8M	177	43.4	66.0	47.3	40.3	63.2	43.4
RegionViT-S+ [52]	-	-	43.9	65.5	47.3	28.5	47.3	57.9	-	-	44.2	67.3	48.2	40.8	64.1	44.0
PVTv2-B2 [7]	35.1M	109	44.6	65.6	47.6	27.4	48.8	58.6	45.0M	153	45.3	67.1	49.6	41.2	64.2	44.4
Stream-ViT-S	42.8M	129	**45.6**	**66.4**	**48.7**	**27.6**	**50.0**	**60.7**	52.4M	173	**46.0**	**67.8**	**50.5**	**41.9**	**65.1**	**45.3**
ResNet101 [19]	56.7M	149	38.5	57.8	41.2	21.4	42.6	51.1	63.2M	210	40.4	61.1	44.2	40.4	61.1	44.2
ResNeXt101-64x4d [26]	95.5M	223	41.0	60.9	44.0	23.9	45.2	54.0	101.9M	269	42.8	63.8	47.3	38.4	60.6	41.3
Swin-S [6]	59.8M	162	44.5	65.7	47.5	27.4	48.0	59.9	69.1M	222	44.8	66.6	48.9	40.9	63.4	44.2
Twins-SVT-B [4]	67.0M	163	45.3	66.7	48.1	28.5	48.9	60.6	76.3M	224	45.2	67.6	49.3	41.5	64.5	44.8
RegionViT-B [52]	-	-	44.6	66.4	47.6	29.6	47.6	59.0	-	-	45.4	68.4	49.6	41.6	65.2	44.8
PVTv2-B3 [7]	67.0M	163	45.9	66.8	49.3	28.6	49.8	61.4	64.9M	180	47.0	68.1	51.7	42.5	65.7	45.7
PVTv2-B5 [7]	91.7M	181	46.2	67.1	49.5	28.5	50.0	62.5	101.6M	226	47.4	68.6	51.9	42.5	65.7	46.0
Stream-ViT-B	64.2M	186	**47.4**	**68.4**	**51.1**	**30.7**	**51.5**	**62.5**	73.8M	231	**48.4**	**70.0**	**53.2**	**43.8**	**67.1**	**47.4**

We split all runs into two groups (small and base) according to GFLOPs. AP^b/AP^m: bounding box/mask AP. GFLOPs is calculated for images at 800 × 600 resolution as in [4].

accuracy of 86.0%, and only requires 49.3% GFLOPs and 39.1% parameters against the best competitive backbone (VOLO-D4†). The results basically demonstrate the key advantage of our Stream-ViT is learning streamlined convolutions in ViT architecture for a better accuracy-computational cost trade-off. Under the same Small size, we observe a clear performance gap between CNN backbone (ResNet-50) and pure ViT backbones (e.g., DeiT-S and Swin-T). After upgrading ViT structures with inductive bias via additional convolutional operations, hybrid backbones (e.g., ViTAE-S, CeiT-S, and Visformer-S) exhibit higher performances than pure ViT backbones. In addition, unlike the existing hybrid backbones which capitalize on static and independent convolution within each block, Stream-ViT-S dynamically learns specialized convolution for each block through streamlined kernel generation, leading to the best performances.

Next, we further show the performance comparisons between our Stream-ViT variants (e.g., Stream-ViT-T, Stream-ViT-S, Stream-ViT-B, Stream-ViT-L) and other state-of-the-art vision backbones with larger input image size (384 × 384) in Table IV. For this upgraded Stream-ViT at higher resolution, we adopt the AdamW optimizer [68] (momentum: 0.9, learning rate: $8.0e^{-6}$, weight decay: $1.0e^{-8}$) on 8 V100 GPUs. The overall optimization process is composed of 35 epochs with cosine decay learning rate scheduler [69] and 5 epochs of linear warm-up. In general, it is clearly observed that our Stream-ViT backbones consistently achieve superior performances than state-of-the-art vision backbones at higher resolution across different model sizes. This again highlights the key merit of our Stream-ViT that dynamically learns specialized convolution for each block through streamlined kernel generation, even under the setup of higher resolution.

TABLE IV
COMPARISON RESULTS OF OUR STREAM-VIT WITH OTHER STATE-OF-THE-ART VISION BACKBONES ON IMAGENET FOR IMAGE RECOGNITION AT HIGHER RESOLUTION

Network	Res	Params	GFLOPs	Top-1	Top-5
Tiny					
CeiT-T [14]	384	6.4M	5.1	78.8	94.7
CaiT-XXS24 [57]	384	12.0M	9.6	80.4	-
Stream-ViT-T	384	22.3M	8.4	**83.6**	**96.8**
Small					
CvT-13 [11]	384	20.0M	16.3	83.0	96.4
T2T-ViT-14 [56]	384	21.5M	17.1	83.3	96.5
CeiT-S [14]	384	24.2M	15.9	83.3	96.5
ViT-S [73]	384	22.0M	15.5	83.4	-
CrossViT-15 [74]	384	28.5M	21.4	83.5	-
ViTAEv2-S [60]	384	19.2M	17.8	83.8	96.7
Stream-ViT-S	384	39.2M	14.1	**84.8**	**97.2**
Base					
CvT-21 [11]	384	32.0M	24.9	83.3	96.2
CrossViT-18 [74]	384	44.6M	32.4	83.9	-
CaiT-XS36 [57]	384	38.6M	28.8	84.3	-
Stream-ViT-B	384	59.0M	27.5	**85.4**	**97.3**
Large					
CrossViT-18 [74]	480	44.9M	56.6	84.1	-
Swin-B [6]	384	88.0M	47.1	84.5	97.0
BoTNet-S1-128 [75]	384	75.1M	45.8	84.7	97.0
ViT-B [73]	384	86.9M	55.5	85.0	-
CaiT-S48 [57]	384	89.5M	63.8	85.1	-
ViTAEv2-B [60]	384	89.7M	74.4	85.3	97.1
Stream-ViT-L	384	116.9M	67.9	**85.9**	**97.6**

We split all runs into four groups (tiny, small, base, large) according to GFLOPs.

B. Object Detection and Instance Segmentation

1) Settings: For object detection and instance segmentation tasks, we adopt the COCO benchmark which consists of ∼ 118K images (train2017) for training and 5K images (val2017) for evaluation, and leverage two mainstream detectors (RetinaNet [71] and Mask R-CNN [72]) for each task. Here we replace the primary CNN backbones in each detector with our Stream-ViT. The backbone is first pre-trained on ImageNet and all the newly added layers are initialized via Xavier [80]. During training, we utilize AdamW [68] for optimization (batch size: 16, weight decay: 0.05, initial learning rate: 0.0001). Each image is resized by maintaining the shorter side as 800 pixels and ensuring that the longer side does not exceed 1,333 pixels. For

Authorized licensed use limited to: TIANJIN UNIVERSITY. Downloaded on December 26,2025 at 12:47:22 UTC from IEEE Xplore. Restrictions apply.

TABLE V
COMPARISON RESULTS OF STREAM-VIT WITH OTHER STATE-OF-THE-ART VISION BACKBONES (SMALL SIZE) UNDER FOUR DIFFERENT OBJECT DETECTORS ON COCO FOR OBJECT DETECTION

Backbone	Params	GFLOPs	AP^b	AP^b_{50}	AP^b_{75}	Backbone	Params	GFLOPs	AP^b	AP^b_{50}	AP^b_{75}
Cascade Mask R-CNN						ATSS					
ResNet50 [19]	82.0M	637	46.3	64.3	50.5	ResNet50 [19]	32.1M	97	43.5	61.9	47.0
Swin-T [6]	85.6M	639	50.5	69.3	54.9	Swin-T [6]	35.7M	100	47.2	66.5	51.3
PVTv2-B2 [7]	82.9M	632	51.1	69.8	55.3	PVTv2-B2 [7]	33.0M	93	49.9	69.1	54.1
Stream-ViT-S	90.2M	651	**51.9**	**70.7**	**56.5**	Stream-ViT-S	40.3M	113	**50.3**	**69.6**	**55.0**
GFL						Sparse R-CNN					
ResNet50 [19]	32.2M	98	44.5	63.0	48.3	ResNet50 [19]	106.1M	75	44.5	63.4	48.2
Swin-T [6]	35.9M	102	47.6	66.8	51.7	Swin-T [6]	109.7M	93	47.9	67.3	52.3
PVTv2-B2 [7]	33.1M	95	50.2	69.4	54.7	PVTv2-B2 [7]	107.0M	85	50.1	69.5	54.9
Stream-ViT-S	40.5M	114	**50.6**	**69.7**	**55.1**	Stream-ViT-S	114.3M	105	**50.6**	**70.2**	**55.4**

GFLOPs is calculated for images at 800 × 600 resolution as in [4].

TABLE VI
COMPARISON RESULTS OF STREAM-VIT WITH OTHER STATE-OF-THE-ART VISION BACKBONES ON ADE20K VALIDATION DATASET FOR SEMANTIC SEGMENTATION (BASIC MODEL: UPERNET)

Small					Base				
Method	Backbone	Params	GFLOPs	mIoU	Method	Backbone	Params	GFLOPs	mIoU
UPerNet [76]	ResNet-50 [19]	66.5M	238	42.8	UPerNet [76]	ResNet-101 [19]	85.5M	257	44.9
DeeplabV3 [77]	ResNeSt-50 [78]	-	-	45.1	DeeplabV3 [77]	ResNeSt-101 [78]	-	-	46.9
Semantic FPN [79]	PVTv2-B2 [7]	-	-	45.2	Semantic FPN [79]	PVTv2-B3 [7]	-	-	47.3
UPerNet [76]	RegionViT-S [52]	-	-	45.3	UPerNet [76]	RegionViT-B [52]	-	-	47.5
UPerNet [76]	DeiT-S [39]	-	-	45.6	UPerNet [76]	Twins-SVT-B [4]	88.5M	261	48.9
UPerNet [76]	Swin-T [6]	59.9M	237	45.8	UPerNet [76]	DeiT-B [39]	-	-	49.3
UPerNet [76]	Twins-SVT-S [4]	54.4M	228	47.1	UPerNet [76]	Swin-S [6]	81.3M	261	49.5
UPerNet [76]	Stream-ViT-S	63.5M	238	**48.8**	UPerNet [76]	Stream-ViT-B	85.0M	265	**51.0**

We split all runs into two groups (small and base) according to GFLOPs. Mean IoU (mIoU) averaged over all classes are reported. GFLOPs is calculated for images at 512 × 512 resolution as in [4].

RetinaNet and Mask R-CNN, we adopt the standard 1 × training schedule (i.e., 12 epochs). In addition to RetinaNet, we also include four state-of-the-art object detectors (i.e., Cascade Mask R-CNN [81], ATSS [82], GFL [83], and Sparse R-CNN [84]) for evaluation. As in [6], [7], we utilize the 3 × schedule (36 epochs) with multi-scale strategy, where the shorter side of each image is randomly resized within [480, 800] and the longer side is forced to be less than 1,333pixels. We report the Average Precision score (AP) across different IoU thresholds and three different object sizes (i.e., small (AP_S), medium (AP_M), large (AP_L)) for object detection. For instance segmentation task, both bounding box and mask AP scores (AP^b, AP^m) are reported.

2) Performance Comparison: In order to validate the generalizability of our Stream-ViT as a backbone, we further show the performances of Stream-ViT when applied to object detection and instance segmentation tasks. Table III details the results of RetinaNet and Mask R-CNN under different backbones. Overall, our Stream-ViT-S and Stream-ViT-B manage to achieve the best performances across all metrics under each model size. The results basically verify that the exploitation of dependencies among the inductive bias across different resolutions improves the transfer capability of pre-trained backbone on each downstream task. Next, we follow [7] and report more object detection results in four state-of-the-art detectors (see Table V). Similar to the observations in RetinaNet detector, Stream-ViT-S consistently outperforms existing CNN/ViT backbones in different detectors, which again demonstrates the superior generalizability of Stream-ViT.

C. Semantic Segmentation

1) Settings: In this task, we evaluate our Stream-ViT on ADE20 K, which includes 25 K images (train/validation/test: 20 K/2 K/3 K) from 150 semantic categories. Here we adopt UPerNet [76] as the base model and replace its CNN backbone with our Stream-ViT. During training, we train the whole architecture on 8 GPUs for 160 K iterations via AdamW [68] optimizer (batch size: 16, initial learning rate: 0.00006, weight decay: 0.01). Linear learning rate decay scheduler with 1,500 linear warmup iterations is utilized for optimization. Each input image is cropped as 512 × 512 and we adopt common data augmentations like random photometric distortion, random horizontal flipping, and random re-scaling within ratio range [0.5, 2.0]. All the hyperparameters and detection heads are set as in [6].

2) Performance Comparison: Table VI lists the performance comparisons between Stream-ViT and other state-of-the-art vision backbones on ADE20 K. Similarly, under the same basic model of UPerNet, Stream-ViT-S/Stream-ViT-B absolutely improves the best competitor Twins-SVT-S/Swin-S with 1.7%/1.5%. The results generally highlight the effectiveness of streamlined convolutions in Stream-ViT for semantic segmentation task.

D. Experimental Analysis

1) Ablation Study: Here we study how each design in Stream-ViT influences the overall performance on ImageNet for image recognition task. Fig. 4 shows the detailed architectures of different Stream-ViT variants and their performances. In particular, **Variant (a)** employs typical Transformer block

Authorized licensed use limited to: TIANJIN UNIVERSITY. Downloaded on December 26,2025 at 12:47:22 UTC from IEEE Xplore. Restrictions apply.

	Params	GFLOPs	Top-1	Top-5
a	16.8M	2.6	81.5	95.6
b	16.9M	2.6	81.8	95.8
c	17.0M	2.5	81.8	95.8
d	20.6M	2.7	82.0	95.9
e	22.3M	2.7	82.5	96.1

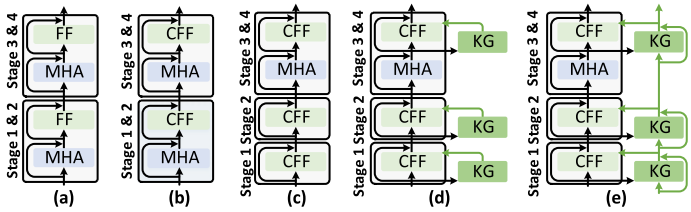

Fig. 4. Ablation study on different variants of Stream-ViT (Tiny size): (a) use typical Transformer block in each stage; (b) replace FF with CFF; (c) remove MHA in the first two stages; (d) equip each block with independent kernel generation; (e) the complete Stream-ViT.

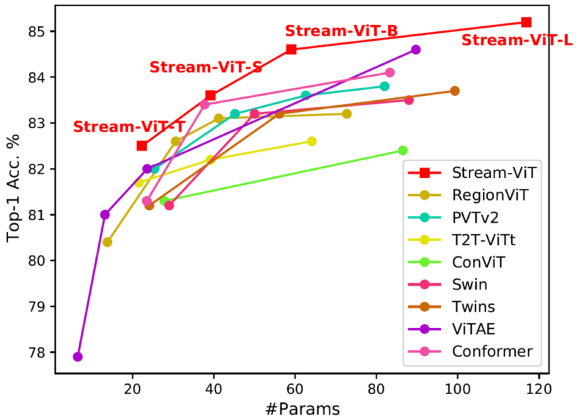

Fig. 5. Model parameter number vs. accuracy on ImageNet.

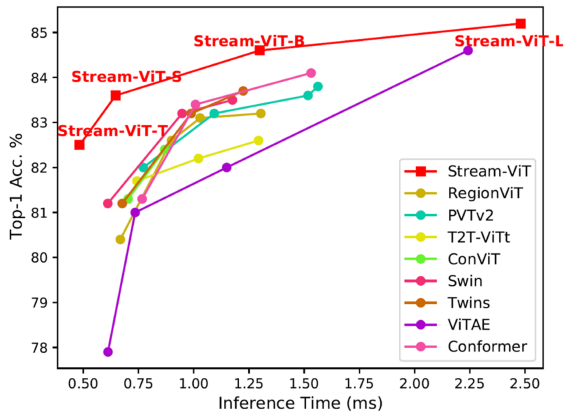

Fig. 6. Inference time vs. accuracy on ImageNet.

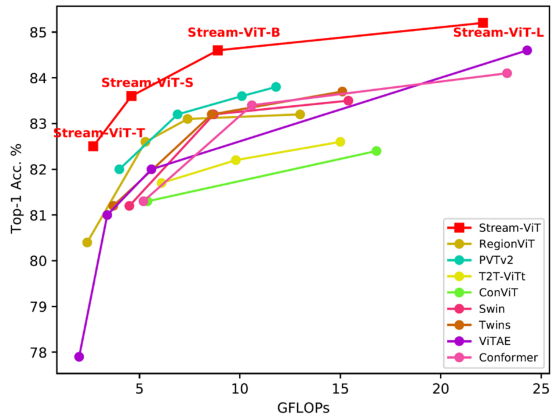

Fig. 7. GFLOPs vs. accuracy on ImageNet.

(MHA&FF) in each stage. **Variant (b)** upgrades (a) by integrating each FF with additional static depth-wise convolution as in our CFF, which exploits inductive bias and thus boosts up performance. **Variant (c)** further removes the MHA in the first two stages and meanwhile enlarges the expansion ratio in CFF. Such design effectively reduces the computational cost without any performance drop. Next, instead of using static convolution in (c), **Variant (d)** leverages independent kernel generation module to dynamically produce the specialized kernels for each block. The Top-1 score of (d) increases from 81.8% to 82.0%, which demonstrates the effectiveness of independent kernel generation in CFF layer. Finally, **Variant (e)** is the full version of our Stream-ViT that includes additional KG pathway to streamline kernel generation, thereby achieving the best performances.

2) Computational Cost vs. Accuracy: Figs. 5, 6, and 7 further illustrate the accuracy curves with regard to computational cost (i.e., model parameter number and inference time of each input image, and GFLOPs) for our Stream-ViT and other vision backbones. This figure clearly shows that the curves of our Stream-ViT are always over those of other vision backbones. In other words, our Stream-ViT seeks better tradeoff between computational cost and accuracy.

V. Conclusion

In this paper, we delve into the idea of streamlining convolutions in ViT architecture by exploiting the dependencies among the inductive bias across different resolutions. We present a new principled hybrid Transformer backbone, i.e., Vision Transformer with Streamlined Convolutions (Stream-ViT). Each streamlined Transformer block consists of two pathways: 1) a hybrid Transformer pathway with our designed Convolutional Feed-Forward (CFF) layer that incorporates the learnt streamlined convolution into the typical feed-forward layer; 2) the streamlined Kernel Generation (KG) pathway that dynamically produces specialized kernels for streamlined convolution in each block according to both current input features and the learnt kernels in the previous block. We empirically validate the superiority of Stream-ViT over the state-of-the-art backbones in image recognition task, under comparable resource constraints. Furthermore, our Stream-ViT also generalizes well to a series of downstream tasks.

References

[1] A. Vaswani et al., "Attention is all you need," in *Proc. Int. Conf. Neural Inf. Process. Syst.*, 2017, pp. 5998–6008.

[2] N. Carion et al., "End-to-end object detection with transformers," in *Proc. Eur. Conf. Comput. Vis.*, 2020, pp. 213–229.

Authorized licensed use limited to: TIANJIN UNIVERSITY. Downloaded on December 26,2025 at 12:47:22 UTC from IEEE Xplore. Restrictions apply.

[3] R. Zhu et al., "SD-DiT: Unleashing the power of self-supervised discrimination in diffusion transformer," in *Proc. IEEE/CVF Conf. Comput. Vis. Pattern Recognit.*, 2024, pp. 8435–8445.

[4] X. Chu et al., "Twins: Revisiting the design of spatial attention in vision transformers," in *Proc. Int. Conf. Neural Inf. Process. Syst.*, 2021, pp. 9355–9366.

[5] A. Dosovitskiy et al., "An image is worth 16x16 words: Transformers for image recognition at scale," in *Proc. Int. Conf. Learn. Representations*, 2020.

[6] Z. Liu et al., "Swin transformer: Hierarchical vision transformer using shifted windows," in *Proc. 2021 IEEE/CVF Int. Conf. Comput. Vis.*, 2021, pp. 9992–10002.

[7] W. Wang et al., "PVTV2: Improved baselines with pyramid vision transformer," in *Comput. Vis. Media*, vol. 8, no. 3, pp. 415–424, 2022.

[8] Y. Pan, T. Yao, Y. Li, and T. Mei, "X-linear attention networks for image captioning," in *Proc. IEEE/CVF Conf. Comput. Vis. Pattern Recognit.*, 2020, pp. 10971–10980.

[9] J. Luo et al., "Semantic-conditional diffusion networks for image captioning," in *Proc. IEEE/CVF Conf. Comput. Vis. Pattern Recognit.*, 2023, pp. 23359–23368.

[10] Y. Li, Y. Pan, T. Yao, and T. Mei, "Comprehending and ordering semantics for image captioning," in *Proc. 2022 IEEE/CVF Conf. Comput. Vis. Pattern Recognit.*, 2022, pp. 17969–17978.

[11] H. Wu et al., "CVT: Introducing convolutions to vision transformers," in *Proc. IEEE Int. Conf. Comput. Vis.*, 2021, pp. 22–31.

[12] Y. Xu, Q. Zhang, J. Zhang, and D. Tao, "ViTAE: Vision transformer advanced by exploring intrinsic inductive bias," in *Proc. Int. Conf. Neural Inf. Process. Syst.*, 2021, vol. 34, pp. 28522–28535.

[13] R. Shi, T. Li, L. Zhang, and Y. Yamaguchi, "Visualization comparison of vision transformers and convolutional neural networks," *IEEE Trans. Multimedia*, vol. 26, pp. 2327–2339, 2024.

[14] K. Yuan et al., "Incorporating convolution designs into visual transformers," in *Proc. 2021 IEEE/CVF Int. Conf. Comput. Vis.*, 2021, pp. 559–568.

[15] X. Lin et al., "EAPT: Efficient attention pyramid transformer for image processing," *IEEE Trans. Multimedia*, vol. 25, pp. 50–61, 2023.

[16] J. Jiao et al., "DilateFormer: Multi-scale dilated transformer for visual recognition," *IEEE Trans. Multimedia*, vol. 25, pp. 8906–8919, 2023.

[17] T. Yao et al., "Dual vision transformer," *IEEE Trans. Pattern Anal. Mach. Intell.*, vol. 45, no. 9, pp. 10870–10882, Sep. 2023.

[18] A. Krizhevsky, I. Sutskever, and G. E. Hinton, "ImageNet classification with deep convolutional neural networks," in *Proc. Int. Conf. Neural Inf. Process. Syst.*, 2012, pp. 1106–1114.

[19] K. He, X. Zhang, S. Ren, and J. Sun, "Deep residual learning for image recognition," in *Proc. IEEE Conf. Comput. Vis. Pattern Recognit.*, 2016, pp. 770–778, 2015.

[20] X. Li, W. Wang, X. Hu, and J. Yang, "Selective kernel networks," in *Proc. IEEE/CVF Conf. Comput. Vis. Pattern Recognit.*, 2019, pp. 510–519.

[21] K. Simonyan and A. Zisserman, "Very deep convolutional networks for large-scale image recognition," in *Proc. Int. Conf. Learn. Representations*, 2015.

[22] C. Szegedy et al., "Going deeper with convolutions," in *Proc. IEEE Conf. Comput. Vis. Pattern Recognit.*, 2015, pp. 1–9.

[23] C. Szegedy, V. Vanhoucke, S. Ioffe, J. Shlens, and Z. Wojna, "Rethinking the inception architecture for computer vision," in *Proc. IEEE Conf. Comput. Vis. Pattern Recognit.*, 2016, pp. 2818–2826.

[24] M. Tan and Q. Le, "Efficientnet: Rethinking model scaling for convolutional neural networks," in *Proc. Int. Conf. Mach. Learn.*, 2019, pp. 6105–6114.

[25] J. Wang et al., "Deep high-resolution representation learning for visual recognition," *IEEE Trans. Pattern Anal. Mach. Intell.*, vol. 43, no. 10, pp. 3349–3364, Oct. 2021.

[26] S. Xie, R. Girshick, P. Dollár, Z. Tu, and K. He, "Aggregated residual transformations for deep neural networks," in *Proc. 2017 IEEE Conf. Comput. Vis. Pattern Recognit.*, 2017, pp. 5987–5995.

[27] A. G. Howard et al., "Mobilenets: Efficient convolutional neural networks for mobile vision applications," 2017, *arXiv:1704.04861*.

[28] B. Heo et al., "Rethinking spatial dimensions of vision transformers," in *Proc. 2021 IEEE Int. Conf. Comput. Vis.*, 2021, pp. 11916–11925.

[29] W. Wang et al., "Pyramid vision transformer: A versatile backbone for dense prediction without convolutions," in *Proc. 2021 IEEE/CVF Int. Conf. Comput. Vis.*, 2021, pp. 548–558.

[30] I. Bello et al., "Attention augmented convolutional networks," in *Proc. IEEE Int. Conf. Comput. Vis.*, 2019, pp. 3285–3294.

[31] H. Hu, Z. Zhang, Z. Xie, and S. Lin, "Local relation networks for image recognition," in *Proc. IEEE/CVF Int. Conf. Comput. Vis.*, 2019, pp. 3463–3472.

[32] P. Ramachandran et al., "Stand-alone self-attention in vision models," in *Proc. Int. Conf. Neural Inf. Process. Syst.*, 2019, pp. 68–80.

[33] H. Zhao, J. Jia, and V. Koltun, "Exploring self-attention for image recognition," in *Proc. 2020 IEEE/CVF Conf. Comput. Vis. Pattern Recognit.*, 2020, pp. 10073–10082.

[34] F. Long et al., "Stand-alone inter-frame attention in video models," in *Proc. 2022 IEEE/CVF Conf. Comput. Vis. Pattern Recognit.*, 2022, pp. 3182–3191.

[35] F. Long et al., "Dynamic temporal filtering in video models," in *Proc. Eur. Conf. Comput. Vis.*, 2022, pp. 475–492.

[36] Z. Dai, H. Liu, Q. V. Le, and M. Tan, "CoAtNet: Marrying convolution and attention for all data sizes," in *Proc. Int. Conf. Neural Inf. Process. Syst.*, 2021, pp. 3965–3977.

[37] T. Yao, Y. Pan, Y. Li, C.-W. Ngo, and T. Mei, "Wave-ViT: Unifying wavelet and transformers for visual representation learning," in *Proc. Eur. Conf. Comput. Vis.*, 2022, pp. 328–345.

[38] T. Yao, Y. Li, Y. Pan, and T. Mei, "HIRI-ViT: Scaling vision transformer with high resolution inputs," *IEEE Trans. Pattern Anal. Mach. Intell.*, vol. 46, no. 9, pp. 6431–6442, Sep. 2024.

[39] H. Touvron et al., "Training data-efficient image transformers & distillation through attention," in *Proc. Int. Conf. Mach. Learn.*, 2021, pp. 10347–10357.

[40] Z. Liu et al., "A convNet for the 2020s," in *Proc. 2022 IEEE/CVF Conf. Comput. Vis. Pattern Recognit.*, 2022, pp. 11966–11976.

[41] I. O. Tolstikhin et al., "MLP-mixer: An all-MLP architecture for vision," in *Proc. Int. Conf. Neural Inf. Process. Syst.*, 2021, pp. 24261–24272.

[42] X. Ding, X. Zhang, J. Han, and G. Ding, "Diverse branch block: Building a convolution as an inception-like unit," in *Proc. IEEE/CVF Conf. Comput. Vis. Pattern Recognit.*, 2021, pp. 10886–10895.

[43] M. Hu et al., "Online convolutional re-parameterization," in *Proc. 2022 IEEE/CVF Conf. Comput. Vis. Pattern Recognit.*, 2022, pp. 558–567.

[44] Y. Chen et al., "Dynamic convolution: Attention over convolution kernels," in *Proc. 2020 IEEE/CVF Conf. Comput. Vis. Pattern Recognit.*, 2020, pp. 11027–11036.

[45] N. Ma, X. Zhang, J. Huang, and J. Sun, "Weightnet: Revisiting the design space of weight networks," in *Proc. Eur. Conf. Comput. Vis.*, 2020, pp. 776–792.

[46] F. Wu et al., "Pay less attention with lightweight and dynamic convolutions," in *Proc. Int. Conf. Learn. Representations*, 2019.

[47] B. Yang, G. Bender, Q. V. Le, and J. Ngiam, "CondConv: Conditionally parameterized convolutions for efficient inference," in *Proc. Int. Conf. Neural Inf. Process. Syst.*, 2019, pp. 1305–1316.

[48] Z.-H. Jiang et al., "All tokens matter: Token labeling for training better vision transformers," in *Proc. Int. Conf. Neural Inf. Process. Syst.*, 2021, pp. 18590–18602.

[49] S. dAscoli et al., "ConViT: Improving vision transformers with soft convolutional inductive biases," in *Proc. Int. Conf. Mach. Learn.*, 2021, pp. 2286–2296.

[50] Z. Peng et al., "Conformer: Local features coupling global representations for visual recognition," in *Proc. IEEE Int. Conf. Comput. Vis.*, 2021, pp. 357–366.

[51] H. Yan et al., "ContNet: Why not use convolution and transformer at the same time?," 2021, *arXiv:2104.13497*.

[52] C.-F. Chen, R. Panda, and Q. Fan, "RegionViT: Regional-to-local attention for vision transformers," in *Proc. Int. Conf. Learn. Representations*, 2022.

[53] Y. Li, T. Yao, Y. Pan, and T. Mei, "Contextual transformer networks for visual recognition," *IEEE Trans. Pattern Anal. Mach. Intell.*, vol. 45, no. 2, pp. 1489–1500, Feb. 2023.

[54] Z. Chen et al., "Visformer: The vision-friendly transformer," in *Proc. 2021 IEEE/CVF Int. Conf. Comput. Vis.*, 2021, pp. 569–578.

[55] K. Li et al., "UniFormer: Unified transformer for efficient spatial-temporal representation learning," in *Proc. Int. Conf. Learn. Representations*, 2021.

[56] L. Yuan et al., "Tokens-to-Token ViT: Training vision transformers from scratch on ImageNet," in *Proc. 2021 IEEE/CVF Int. Conf. Comput. Vis.*, 2021, pp. 538–547.

[57] H. Touvron et al., "Going deeper with image transformers," in *Proc. IEEE/CVF Int. Conf. Comput. Vis.*, 2021, pp. 32–42.

[58] K. Han et al., "Transformer in transformer," in *Proc. Int. Conf. Neural Inf. Process. Syst.*, 2021, pp. 15908–15919.

[59] J. Yang et al., "Focal self-attention for local-global interactions in vision transformers," in *Proc. Int. Conf. Neural Inf. Process. Syst.*, 2021, pp. 30008–30022.

[60] Q. Zhang, Y. Xu, J. Zhang, and D. Tao, "Vitaev2: Vision transformer advanced by exploring inductive bias for image recognition and beyond," in *Int. J. Comput. Vis.*, vol. 131, no. 5, pp. 1141–1162, 2023.

Authorized licensed use limited to: TIANJIN UNIVERSITY. Downloaded on December 26,2025 at 12:47:22 UTC from IEEE Xplore. Restrictions apply.

[61] M. Tan and Q. Le, "EfficientNetV2: Smaller models and faster training," in *Proc. Int. Conf. Mach. Learn.*, 2021, pp. 10096–10106.
[62] L. Yuan, Q. Hou, Z. Jiang, J. Feng, and S. Yan, "VOLO: Vision outlooker for visual recognition," *IEEE Trans. Pattern Anal. Mach. Intell.*, vol. 45, no. 5, pp. 6575–6586, May 2023.
[63] J. Deng et al., "ImageNet: A large-scale hierarchical image database," in *Proc. IEEE Conf. Comput. Vis. Pattern Recognit.*, 2009, pp. 248–255.
[64] T.-Y. Lin et al., "Microsoft COCO: Common objects in context," in *Proc. Eur. Conf. Comput. Vis.*, 2014, pp. 740–755.
[65] B. Zhou et al., "Semantic understanding of scenes through the ADE20K dataset," *Int. J. Comput. Vis.*, vol. 127, pp. 302–332, 2019.
[66] Z. Zhong et al., "Random erasing data augmentation," in *Proc. AAAI Conf. Artif. Intell.*, 2020, pp. 13001–13008.
[67] E. D. Cubuk, B. Zoph, J. Shlens, and Q. V. Le, "Randaugment: Practical automated data augmentation with a reduced search space," in *Proc. IEEE Conf. Comput. Vis. Pattern Recognit. Workshops*, 2020, pp. 3008–3017.
[68] I. Loshchilov and F. Hutter, "Decoupled weight decay regularization," in *Proc. Int. Conf. Learn. Representations*, 2019.
[69] I. Loshchilov and F. Hutter, "SGDR: Stochastic gradient descent with warm restarts," in *Proc. Int. Conf. Learn. Representations*, 2017.
[70] B. Recht, R. Roelofs, L. Schmidt, and V. Shankar, "Do ImageNet classifiers generalize to ImageNet?," in *Proc. Int. Conf. Mach. Learn.*, 2019, pp. 5389–5400.
[71] T.-Y. Lin et al., "Focal loss for dense object detection," in *Proc. IEEE Int. Conf. Comput. Vis.*, 2017, pp. 2999–3007.
[72] K. He, G. Gkioxari, P. Dollár, and R. Girshick, "Mask R-CNN," in *Proc. 2017 IEEE Int. Conf. Comput. Vis.*, 2017, pp. 2980–2988.
[73] H. Touvron, M. Cord, and H. Jegou, "DeiT III: Revenge of the ViT," in *Proc. Eur. Conf. Comput. Vis.*, 2022, pp. 516–533.
[74] C.-F. R. Chen, Q. Fan, and R. Panda, "CrossViT: Cross-attention multi-scale vision transformer for image classification," in *Proc. IEEE Int. Conf. Comput. Vis.*, 2021, pp. 347–356.
[75] A. Srinivas et al., "Bottleneck transformers for visual recognition," in *Proc. IEEE/CVF Conf. Comput. Vis. Pattern Recognit.*, 2021, pp. 16519–16529.
[76] T. Xiao, Y. Liu, B. Zhou, Y. Jiang, and J. Sun, "Unified perceptual parsing for scene understanding," in *Proc. Eur. Conf. Comput. Vis.*, 2018, pp. 432–448.
[77] L.-C. Chen et al., "Encoder-decoder with atrous separable convolution for semantic image segmentation," in *Proc. Eur. Conf. Comput. Vis.*, 2018, pp. 833–851.
[78] H. Zhang et al., "ResNeSt: Split-attention networks," in *Proc. IEEE Conf. Comput. Vis. Pattern Recognit.*, 2022, pp. 2735–2745.
[79] A. Kirillov, R. Girshick, K. He, and P. Dollár, "Panoptic feature pyramid networks," in *Proc. IEEE Conf. Comput. Vis. Pattern Recognit.*, 2019, pp. 6399–6408.
[80] X. Glorot and Y. Bengio, "Understanding the difficulty of training deep feedforward neural networks," in *Proc. Int. Conf. Artif. Intell. Statist.*, 2010, pp. 249–256.
[81] Z. Cai and N. Vasconcelos, "Cascade R-CNN: Delving into high quality object detection," in *Proc. IEEE Conf. Comput. Vis. Pattern Recognit.*, 2018, pp. 6154–6162.
[82] S. Zhang, C. Chi, Y. Yao, Z. Lei, and S. Z. Li, "Bridging the gap between anchor-based and anchor-free detection via adaptive training sample selection," in *Proc. 2020 IEEE/CVF Conf. Comput. Vis. Pattern Recognit.*, 2020, pp. 9756–9765.
[83] X. Li et al., "Generalized focal loss: Learning qualified and distributed bounding boxes for dense object detection," in *Proc. Int. Conf. Neural Inf. Process. Syst.*, 2020, pp. 21002–21012.
[84] P. Sun et al., "Sparse R-CNN: End-to-end object detection with learnable proposals," in *Proc. 2021 IEEE/CVF Conf. Comput. Vis. Pattern Recognit.*, 2021, pp. 14454–14463.

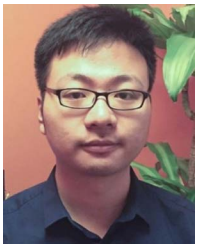

Yingwei Pan (Member, IEEE) received the Ph.D. degree in electrical engineering from University of Science and Technology of China, Hefei, China, in 2018. He is currently a Technical Director in HiDream.ai. His research interests include vision and language, and visual content understanding. He is the Principal Designer of the top-performing multimedia analytic systems in international competitions such as COCO Image Captioning, ActivityNet Dense-Captioning Events in Videos Challenge 2017, Visual Domain Adaptation Challenge 2018, and MSR-Bing Image Retrieval Challenge 2013 and 2014.

Yehao Li received the Ph.D. degree from Sun Yet-sen University, Guangzhou, China, in 2019. He is currently a Senior Researcher in HiDream.ai. His research interests include vision and language, large-scale visual search, and video understanding. He was one of core designers of top-performing multimedia analytic systems in worldwide competitions such as COCO Image Captioning, ActivityNet Dense-Captioning Events in Videos Challenge 2017 and Visual Domain Adaptation Challenge 2018.

Ting Yao (Senior Member, IEEE) was a Principal Researcher with JD AI Research in Beijing, China, and a Researcher with Microsoft Research Asia in Beijing, China. He is currently the CTO of HiDream.ai, a high-tech startup company focusing on generative intelligence for creativity. He has coauthored more than 80 peer-reviewed papers in top-notch conferences/journals, with 12,000 citations. He has developed one standard 3D Convolutional Neural Network, i.e., Pseudo-3D Residual Net, for video understanding, and his video-to-text dataset of MSR-VTT has been used by more than 400 institutes worldwide. He was an Associate Editor for IEEE TRANSACTIONS ON MULTIMEDIA, *Pattern Recognition Letters*, and *Multimedia Systems.* He was the recipient of the 2015 ACM-SIGMM Outstanding Ph.D. Thesis Award, 2019 ACM-SIGMM Rising Star Award, 2019 IEEE-TCMC Rising Star Award, 2022 IEEE ICME Multimedia Star Innovator Award, and the winner of more than 10 championship in worldwide competitions.

Chong-Wah Ngo (Senior Member, IEEE) received the B.Sc. and M.Sc. degrees in computer engineering from Nanyang Technological University, Singapore, and the Ph.D. degree in computer science from the Hong Kong University of Science and Technology, Hong Kong. He was a Postdoctoral Scholar with the Beckman Institute, the University of Illinois at Urbana-Champaign Urbanna, IL, USA. He was also a Visiting Researcher with Microsoft Research Asia, Beijing, China. He was a Professor with the Department of Computer Science, City University of Hong Kong, Hong Kong. He is currently a Professor with the School of Information Systems, Singapore Management University, Singapore. His research interests include large-scale multimedia information retrieval, video computing, multimedia mining, and visualization. He was the Chairman of ACM (Hong Kong Chapter) from 2008 to 2009. Prof. Ngo was the Associate Editor for IEEE TRANSACTIONS ON MULTIMEDIA during 2011–2014. He was the Co-Chair of the ACM International Conference on Multimedia Retrieval, 2015, and the Pacific Rim Conference on Multimedia, 2014. He was also the Program Co-Chair of ACM Multimedia 2019, ACM Multimedia Modeling 2012, and ICMR 2012.

Tao Mei (Fellow, IEEE) received the B.E. and Ph.D. degrees from the University of Science and Technology of China, Hefei, China, in 2001 and 2006, respectively. He was a Vice President of JD.COM and a Senior Research Manager of Microsoft Research. He is the Founder and CEO of HiDream.ai. He has authored or coauthored more than 200 publications (with 12 best paper awards) in journals and conferences, 10 book chapters, and edited five books. He holds over 25 US and international patents. He is or has been an Editorial Board Member of IEEE TRANSACTIONS ON IMAGE PROCESSING, IEEE TRANSACTIONS ON CIRCUITS AND SYSTEMS FOR VIDEO TECHNOLOGY, IEEE TRANSACTIONS ON MULTIMEDIA, *ACM Transactions on Multimedia Computing,Communications, and Applications, Pattern Recognition*. He is the General Co-Chair of IEEE International Conference on Multimedia & Expo 2015, IEEE Multimedia Signal Processing 2015, the Program Co-chair of ACM Multimedia 2018, IEEE International Conference on Multimedia & Expo 2019, He is a Fellow of IAPR (2016), a Distinguished Scientist of ACM (2016), and a Distinguished Industry Speaker of IEEE Signal Processing Society (2017).

Authorized licensed use limited to: TIANJIN UNIVERSITY. Downloaded on December 26,2025 at 12:47:22 UTC from IEEE Xplore. Restrictions apply.