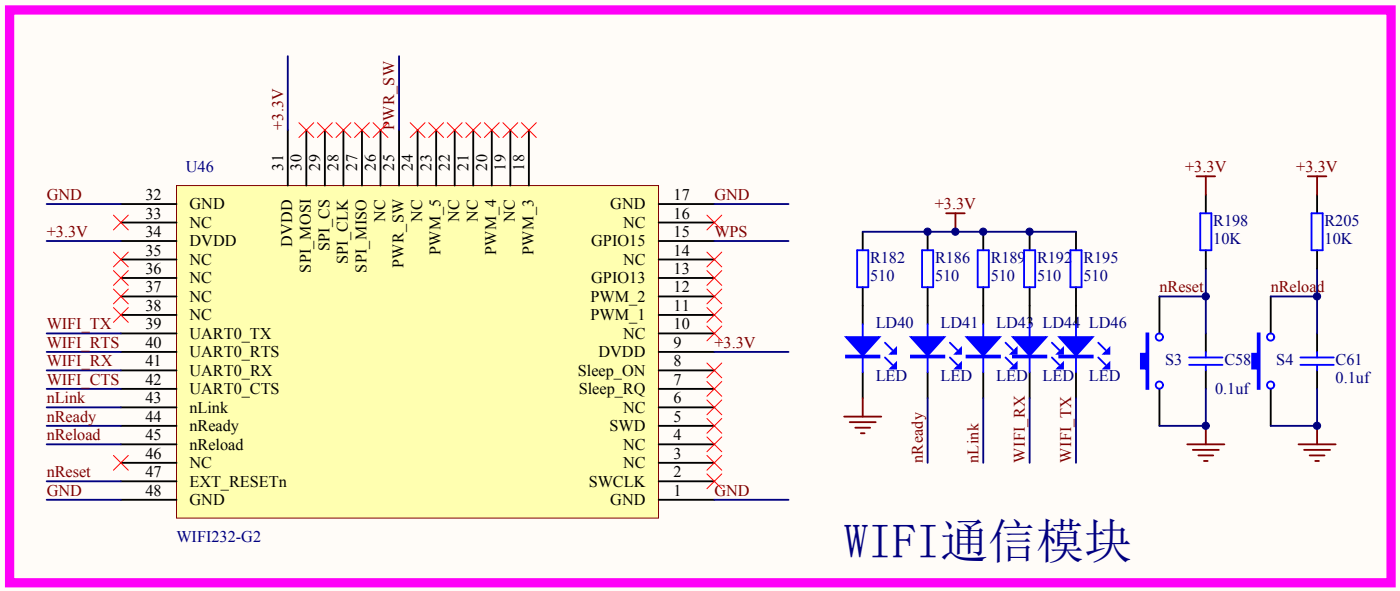

WIFI通信模块

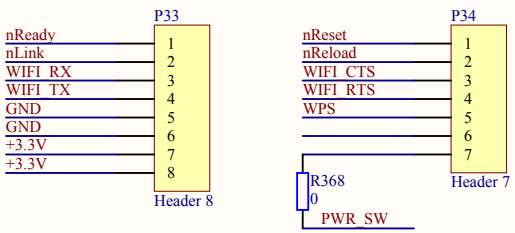

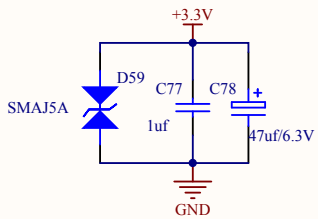

Title		
Size A4	Number	Revision
Date: 2016-09-07		Sheet of
File: H:\ \..\ WIFI 0109.SchDoc		Drawn By: