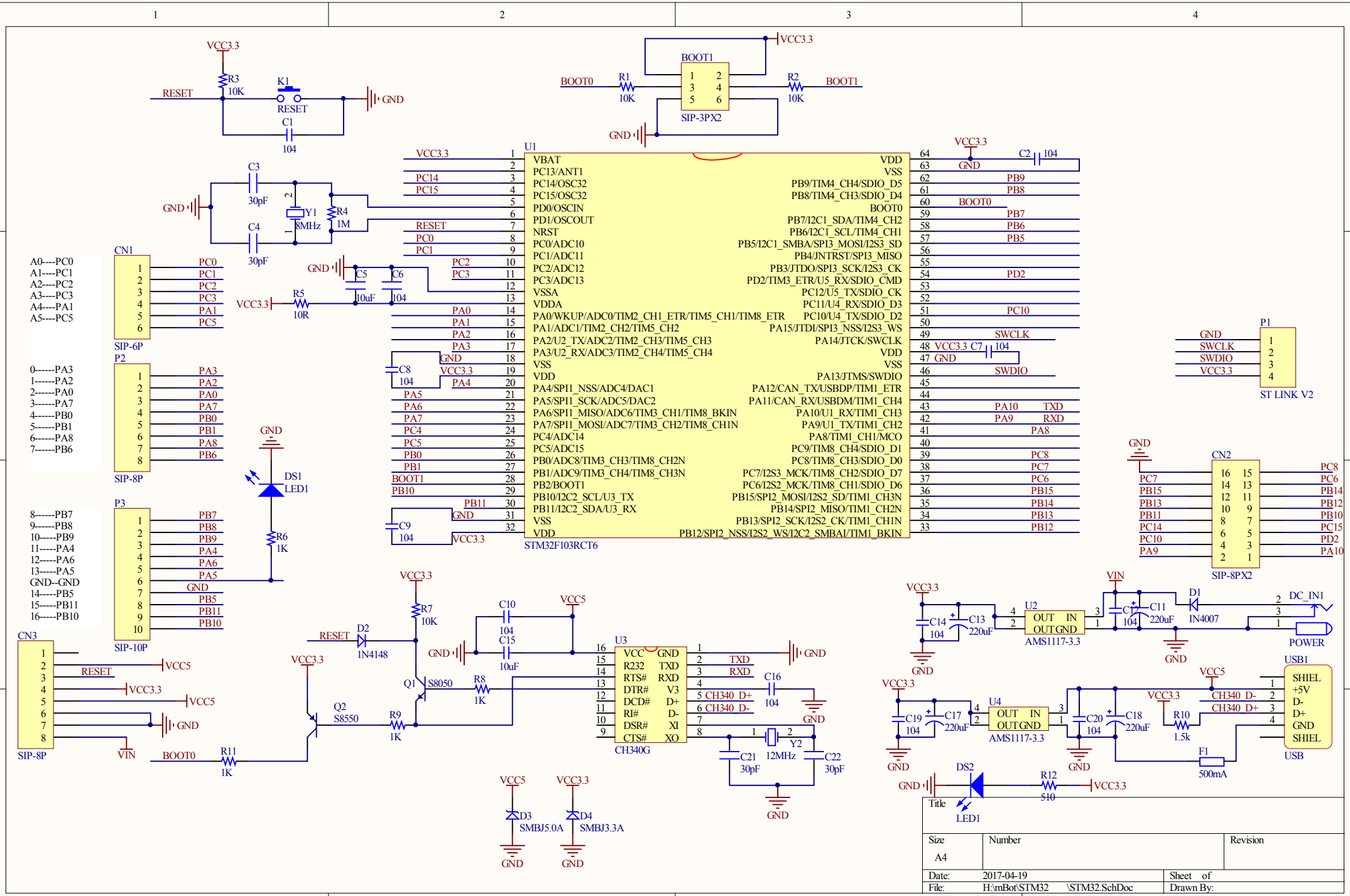
U1
STM32F103RCT6
VBAT
PC13/ANT1
PC14/OSC32
PC15/OSC32
PD0/OSCIN
PD1/OSCOUT
NRST
PC0/ADC10
PC1/ADC11
PC2/ADC12
PC3/ADC13
VSSA
VDDA
PA0/WKUP/ADC0/TIM2_CH1_ETR/TIM5_CH1/TIM8_ETR
PA1/ADC1/TIM2_CH2/TIM5_CH2
PA2/U2_TX/ADC2/TIM2_CH3/TIM5_CH3
PA3/U2_RX/ADC3/TIM2_CH4/TIM5_CH4
VSS
VDD
PA4/SPI1_NSS/ADC4/DAC1
PA5/SPI1_SCK/ADC5/DAC2
PA6/SPI1_MISO/ADC6/TIM3_CH1/TIM8_BKIN
PA7/SPI1_MOSI/ADC7/TIM3_CH2/TIM8_CH1N
PC4/ADC14
PC5/ADC15
PB0/ADC8/TIM3_CH3/TIM8_CH2N
PB1/ADC9/TIM3_CH4/TIM8_CH3N
PB2/BOOT1
PB10/I2C2_SCL/U3_TX
PB11/I2C2_SDA/U3_RX
VSS
VDD
VDD
VSS
PB9/TIM4_CH4/SDIO_D5
PB8/TIM4_CH3/SDIO_D4
BOOT0
PB7/I2C1_SDA/TIM4_CH2
PB6/I2C1_SCL/TIM4_CH1
PB5/I2C1_SMBA/SPI3_MOSI/I2S3_SD
PB4/JNTRST/SPI3_MISO
PB3/JTDO/SPI3_SCK/I2S3_CK
PD2/TIM3_ETR/U5_RX/SDIO_CMD
PC12/U5_TX/SDIO_CK
PC11/U4_RX/SDIO_D3
PC10/U4_TX/SDIO_D2
PA15/JTDI/SPI3_NSS/I2S3_WS
PA14/JTCK/SWCLK
VDD
VSS
PA13/JTMS/SWDIO
PA12/CAN_TX/USBDP/TIM1_ETR
PA11/CAN_RX/USBDM/TIM1_CH4
PA10/U1_RX/TIM1_CH3
PA9/U1_TX/TIM1_CH2
PA8/TIM1_CH1/MCO
PC9/TIM8_CH4/SDIO_D1
PC8/TIM8_CH3/SDIO_D0
PC7/I2S3_MCK/TIM8_CH2/SDIO_D7
PC6/I2S2_MCK/TIM8_CH1/SDIO_D6
PB15/SPI2_MOSI/I2S2_SD/TIM1_CH3N
PB14/SPI2_MISO/TIM1_CH2N
PB13/SPI2_SCK/I2S2_CK/TIM1_CH1N
PB12/SPI2_NSS/I2S2_WS/I2C2_SMBAI/TIM1_BKIN
CN1
SIP-6P
A0----PC0
A1----PC1
A2----PC2
A3----PC3
A4----PA1
A5----PC5
P2
SIP-8P
0------PA3
1------PA2
2------PA0
3------PA7
4------PB0
5------PB1
6------PA8
7------PB6
P3
SIP-10P
8------PB7
9------PB8
10-----PB9
11-----PA4
12-----PA6
13-----PA5
GND--GND
14-----PB5
15-----PB11
16-----PB10
CN3
SIP-8P
CN2
SIP-8PX2
P1
ST LINK V2
SWCLK
SWDIO
BOOT1
SIP-3PX2
U3
CH340G
VCC
R232
RTS#
DTR#
DCD#
RI#
DSR#
CTS#
GND
TXD
RXD
V3
D+
D-
XI
XO
CH340 D+
CH340 D-
U2
AMS1117-3.3
OUT
IN
OUT GND
U4
AMS1117-3.3
USB1
USB
SHIEL
+5V
D-
D+
GND
SHIEL
POWER
DC_IN1
IN4007
F1
500mA
Y1
8MHz
Y2
12MHz
DS1
LED1
DS2
LED1
D1
D2
1N4148
D3
SMBJ5.0A
D4
SMBJ3.3A
Q1
S8050
Q2
S8550
K1
RESET
VCC3.3
VCC5
VIN
BOOT0
BOOT1
GND
Title
Size
A4
Number
Revision
Date:
2017-04-19
File:
H:\mBot\STM32
\STM32.SchDoc
Sheet of
Drawn By: