电子科技大学
格拉斯哥学院
Glasgow College, UESTC

UESTC 3010: Team Design Project and Skills

Lecture 1b

Path-following cars with automotive radar – An Overview

Introduction

On this course you will be required to **design**, **build** and **demonstrate** a car that performs certain tasks.

The tasks will be demonstrated using **1 patio** which will have a total of **3 tasks**.

General Rules

The maximum cost of the project is **2500 RMB**.

- You are free to design and implement a car of your choice that accomplishes the tasks in this project. All parts should be listed in the bill of materials, which should be an appendix in the team final report. Excellent projects will provide full justification for the choice of components used.

Example car components

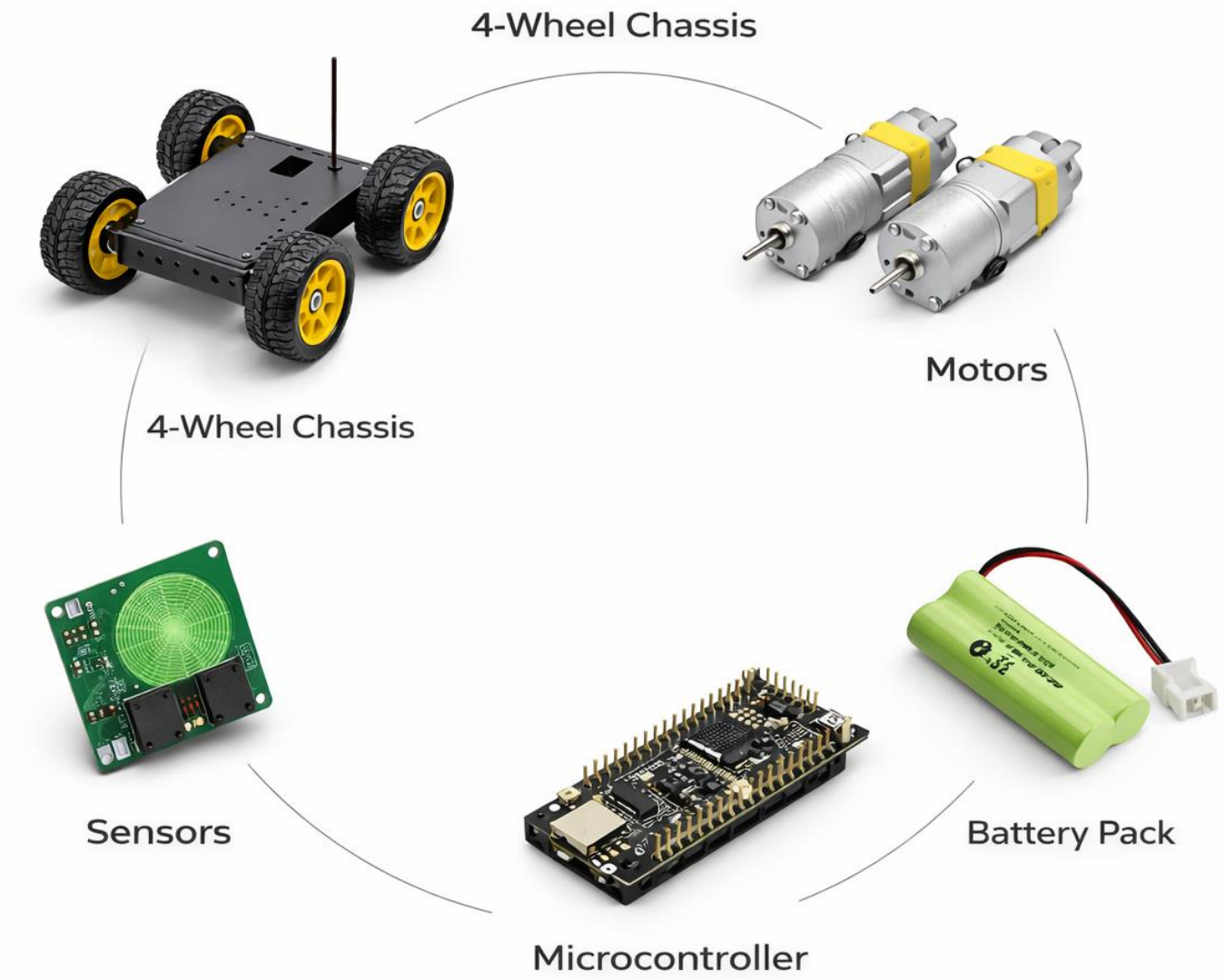

Patio - top view

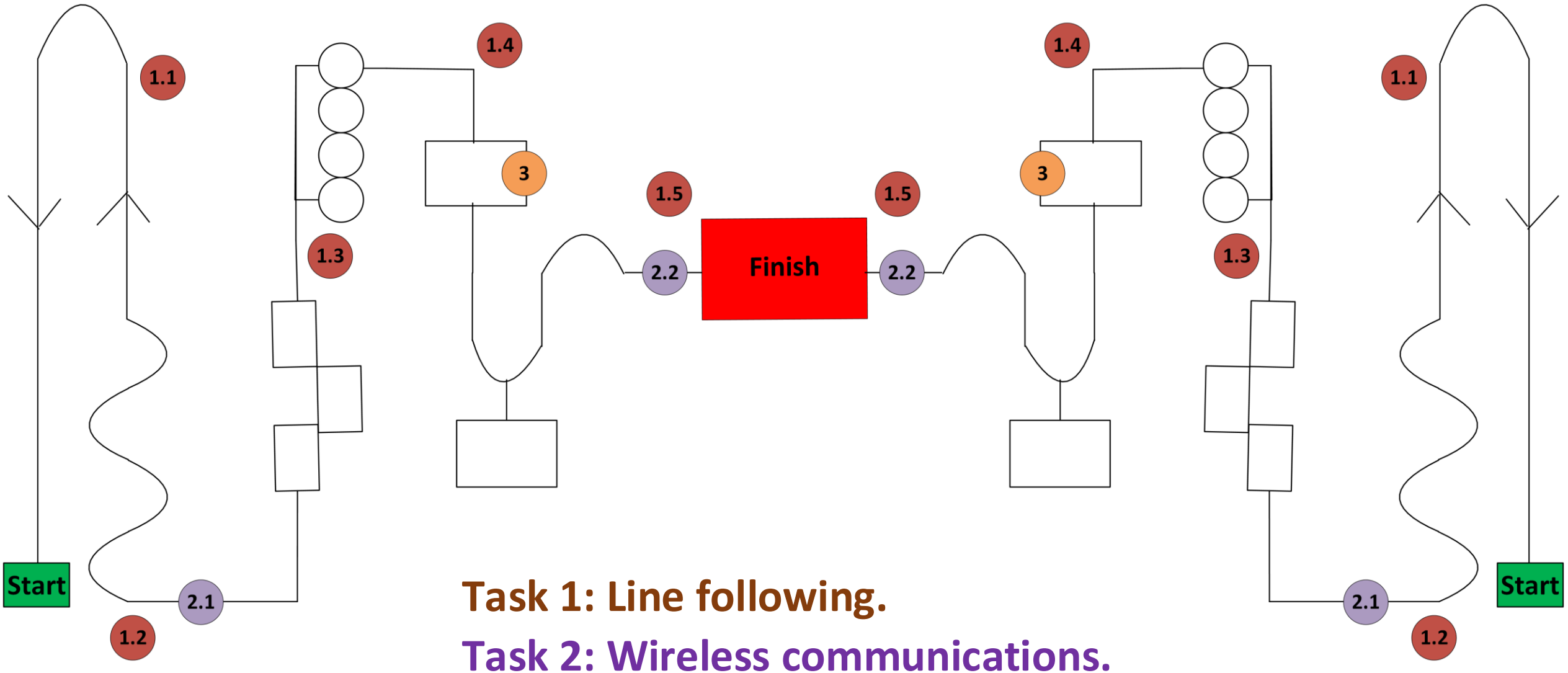

Task 1: Line following.

Task 2: Wireless communications.

Task 3: Automotive radar.

Competition overview

This year, two teams will be racing, starting from both ends of the track. The tracks are symmetrical. The racing part is optional and does not contribute to the final marks. The cars will be only assessed based on technical performance during the designed tasks. So, the racing is for the “fun” part. The best 8 teams will be selected to participate in the finals on the demonstration day, and the best three teams will be given an award certificate.

The 8 finalist teams will be selected based on their demonstration scores and the total time it took their cars to finish all three tasks.

Patio - top view – with dimensions

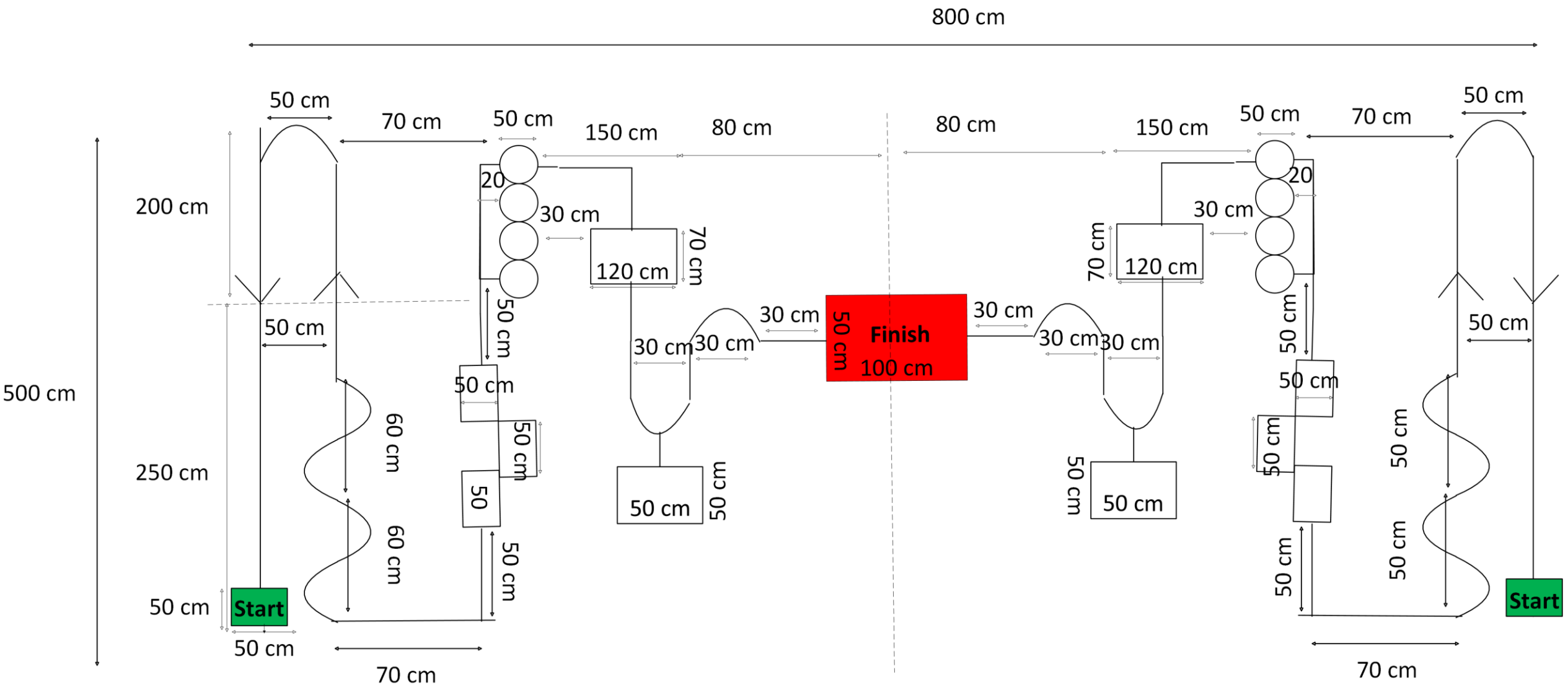

Task 1 – Line follower

Task 1. From the start point (green box), your car needs to follow the black line. It also needs to navigate through the bends and boxes. Ideally, you would want to follow the shortest route to the finish box. The line will be 3 cm thick, and the green box will be 50 x 50 cm in size. This task has 5 subtasks with a combined total of 50% of the total demonstration marks.

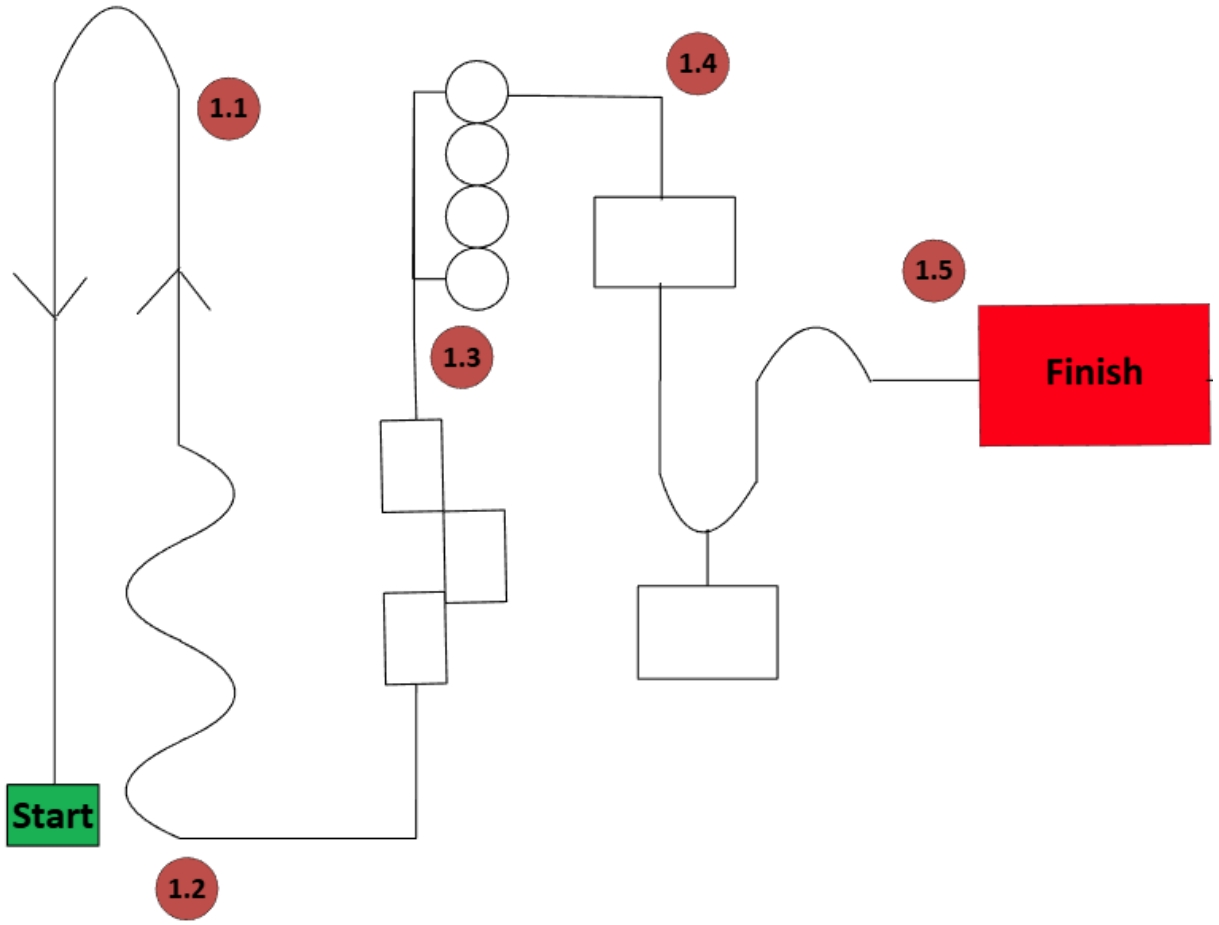

What kind of components are needed to achieve that? A camera, IR or???

Task 1 – Line follower

Task 1. The car should be on top of the line at all times. If the car fully leaves the line, the subtask must be restarted from the previous marker. e.g. if it completely leaves the line between 1.2 and 1.3, it should start again from 1.2.

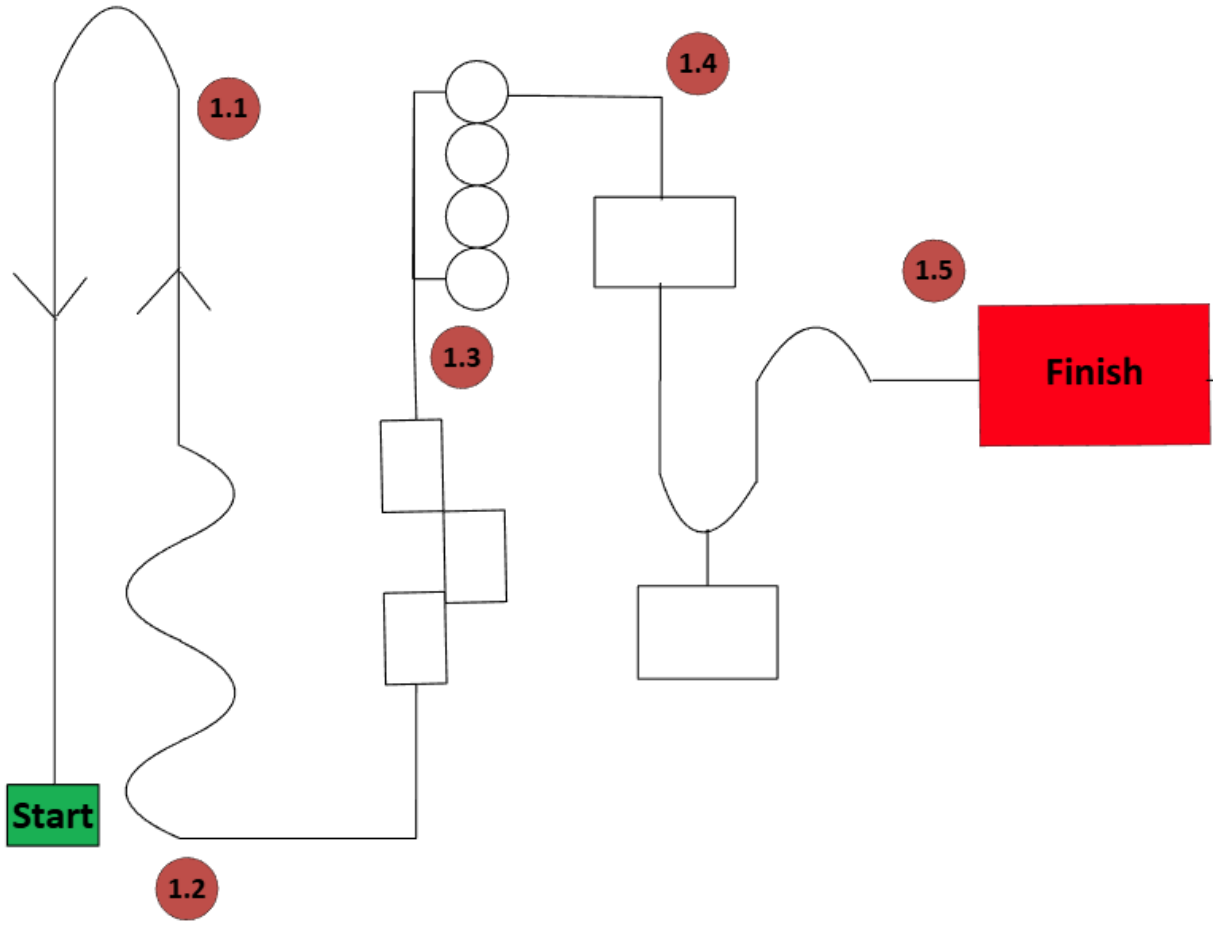

What kind of components are needed to achieve that? A camera, IR or???

Task 2 – Wireless communications

At markers 2.1 and 2.2, there will be an arch which is 50 cm high. The arch will have a wireless receiver pointing downwards. When your car passes underneath the arch, it must transmit the current time, team number and name and the time duration since the start of the race in minutes:seconds. This task will carry 20% of the total demonstration marks.

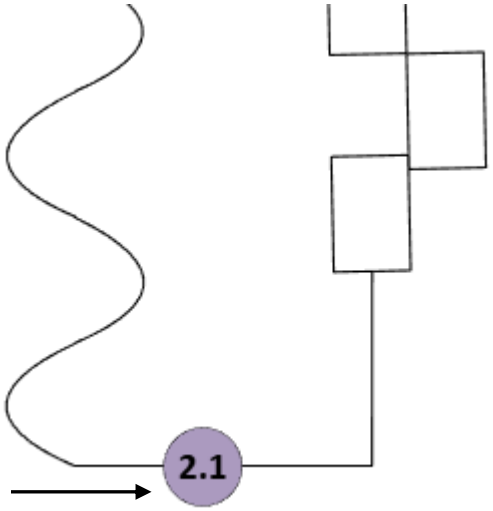

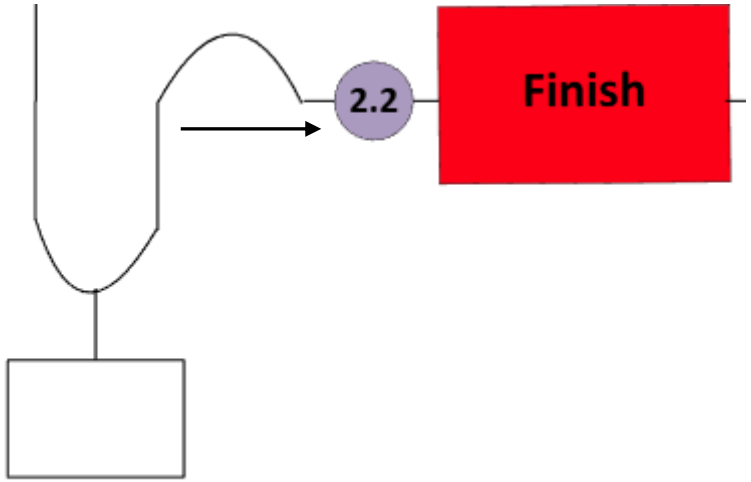

Task 2 – Wireless communications

You are free to choose any transmit module but it has to be based on the LoRa (Long Range) protocol. The LoRa protocol is a low-power, long-range wireless modulation technology designed for IoT, operating in unlicensed sub-gigahertz radio bands (e.g., 868/915 MHz). The receiver will be provided and integrated within the arch. You are only required to buy and program the transmitter.

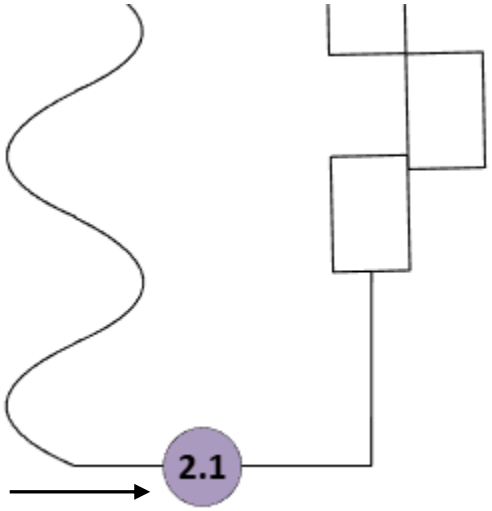

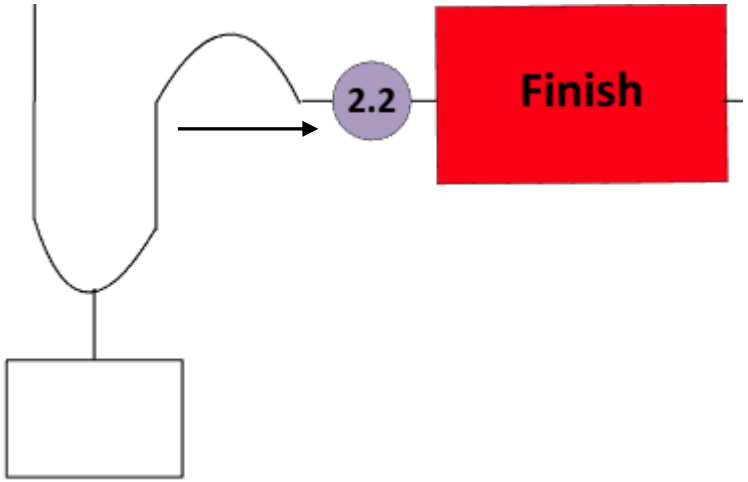

Task 3 – Automotive radar

In task 3, there will be an obstacle placed randomly at one side of the box, either right or left. The car should scan the box ahead and determine where the obstacle is placed before entering the box. It should use the free side of the box to pass through to the next stage. This task will carry 30% of the total demonstration marks.

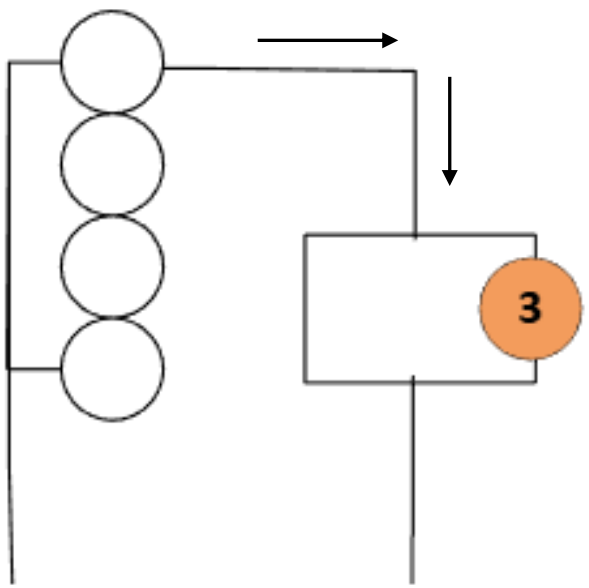

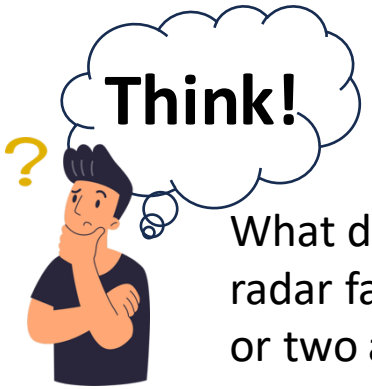

What direction/angle should the radar face? Is one radar enough or two are required?

Task 3 – Automotive radar

For this task, a 24 GHz radar chip must be used. Higher frequencies are also allowed but nothing below 24 GHz can be used. This year, TDPS will will be kindly supported by CYCPLUS, a leading company in developing FMCW radar modules. They will be supporting TDPS this year by providing radar chips. You are free to use other radar chips.

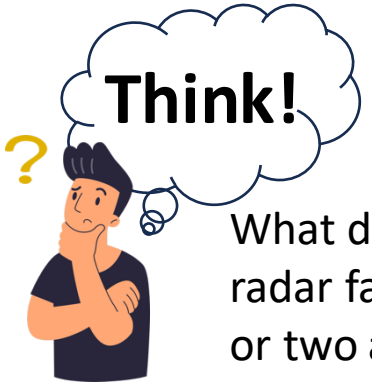

What direction/angle should the radar face? Is one radar enough or two are required?

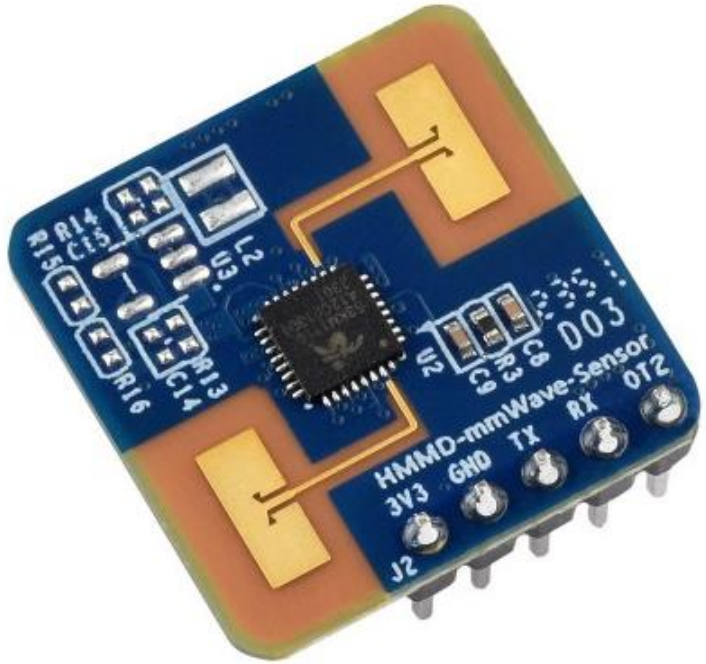

Example of a 24 GHz radar chip

General Rules

1. The project demonstration for all the teams will be held on **Saturday 6th June 2026**.

- Each team will train and program their car to complete all tasks on the Patio.
- All teams should be prepared to demonstrate their car at 8:30 am and at other times when their team is called later in the day.
- Teams should have their batteries fully charged before 8:30 am. Use of power packs to supplement or replace the battery will not be allowed.

General Rules

2. Each team will have **one** opportunity to complete the tasks on their assigned Patio. Additional opportunities to complete the tasks on a particular patio may be allowed <u>if time permits</u>. However, there is **no guarantee** that this will be allowed.

- **<u>Each team will be allotted 10 minutes per</u>** run on assigned Patio for the team's car to complete all the tasks.
- Every effort will be made to announce when a team should begin a run on their assigned patio, but it is the team's responsibility to check their scheduled demonstration time and be ready at the starting point of the first task. A team that fails to begin the run within the 5-minute window will be given a score of 0 for the first (and possibly only) run on that course.

General Rules

3. The car must run using a program that has been previously downloaded to a microcontroller on board the car. Instructions cannot be transmitted in real-time to the car.

4. There is no limit to using any microcontroller that you find suitable to finish the tasks.

5. A functional robot must be demonstrated by week 8 during the presentations, it should be able to move forward and does not have to have any integrated sensors. Just basic movement forward.

6. Week 13, we will carry a mock demonstration to trial the robots. This will be arranged by the GTAs.

General Rules

7. There are **three tasks** to be completed on the Patio. Task 1 carries 50 marks, task 2 carries 20 marks and task 3 carries 30 marks.

- You will receive full marks for the first task only if you complete it in the first run. You will be penalized by two marks for every external interference, touch or restart.
- To receive full marks for the subsequent tasks, the transition from one task to another should be programmed (without any external interference). You will be penalized for any repositioning or restart (minus two marks for each external interference, touch or restart) for second and third tasks if it does not transit automatically from one to another.

General Rules

8. Electrical systems and all connections to circuit components and subsystems must be rugged and reliable.
   - Wires should be soldered onto PCBs, V-board, or punchboard or screwed into terminal blocks on PCBs, V-board or punchboard. Breadboard circuits are not allowed.
   - A fuse and ON-OFF switch should be placed between the battery and the rest of the car. The fuse should be sized appropriately so that it will not be damaged during normal operation of the car, but will create an open circuit should more current than expected be drawn from the battery.

9. Each team is expected to design a motor driver circuit and the PCB on which this circuit is constructed.

Lab Books

- You are required to keep an updated record of your project progress. Your lab books **<u>will be assessed in week 8.</u>**

- *"Researchers use a lab notebook to document their hypotheses, experiments and initial analysis or interpretation of these experiments. The notebook serves as an organizational tool, a memory aid, and can also have a role in protecting any intellectual property that comes from the research "* – **Wikipedia**.

Lab Books

- Paper based Laboratory Notebooks

- Electronic Laboratory Notebooks

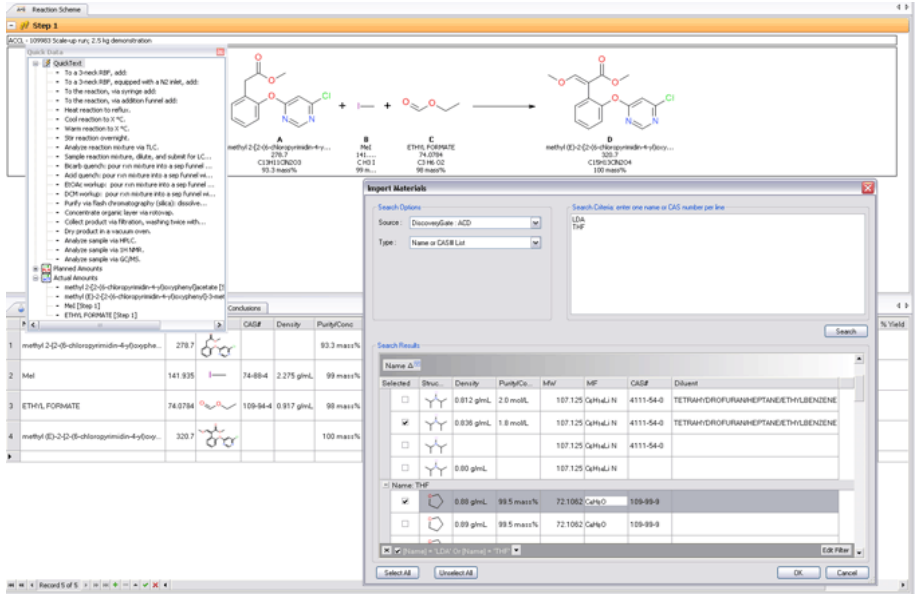

Project Planning – Gantt Charts

- GANTT charts display the tasks in a project as a box or line showing the calendar duration of the task on the horizontal axis (the horizontal length of the task box is proportional to the task duration)
- Tasks are normally arranged in date order on the vertical axis
- The time relation of all tasks to each other (for example, tasks carried out simultaneously) is therefore clearly apparent in a GANTT chart

Project Planning – Gantt Charts

- The project status can be easily determined at intermediate dates in the project
- Progress of individual tasks can be shown by filling in the task boxes.
- Dependencies between tasks can be indicated by lines linking tasks.

Gantt Charts - Examples

https://www.usemotion.com/blog/gantt-chart

Gantt Charts - Examples

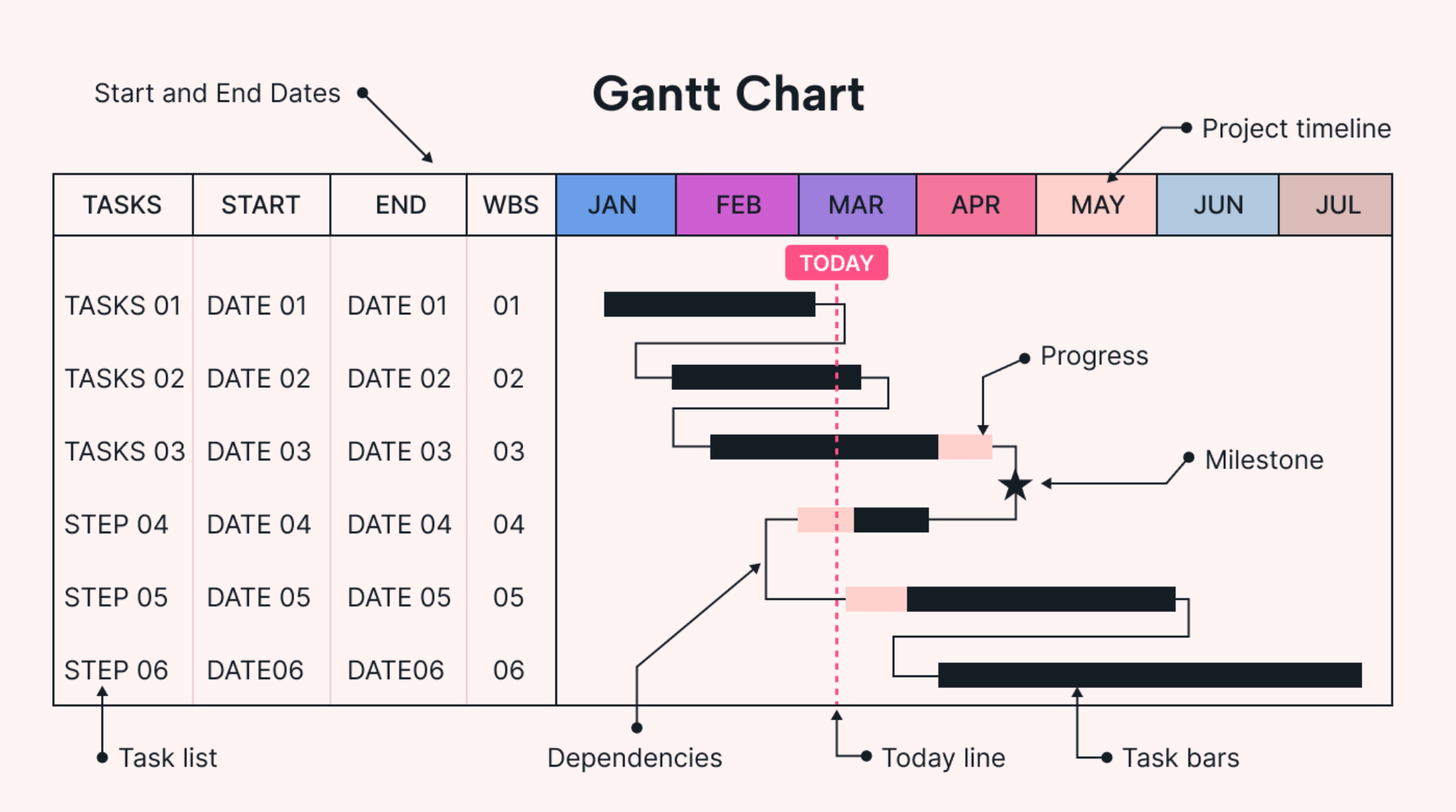

https://www.usemotion.com/blog/gantt-chart

Process flow diagram- Examples

Symbol	Name	Function
	Process	A rectangle represents a process.
	Start/end	An oval represents a start or end point.
	Decision	A diamond indicates a decision.
	Input/Output	A parallelogram represents input or output.
	Arrows	A line is a connector that shows relationships between the representative shapes.

https://www.usemotion.com/blog/gantt-chart
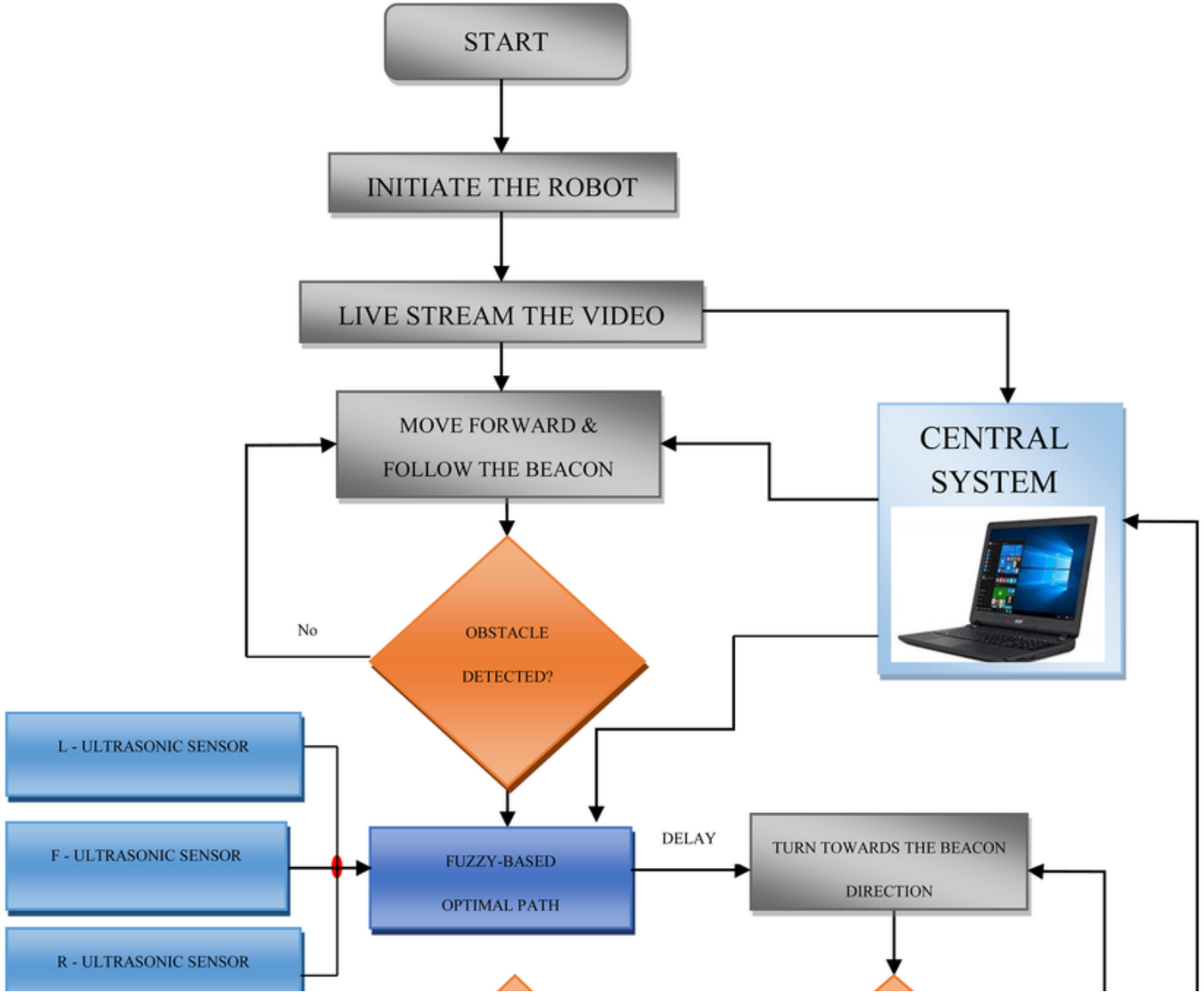
Process flow diagram- Examples