Constructing Convex Lens Digital Twin for Augmented Reality-Assisted Ophthalmic Microsurgery

Yankun (Alex) Meng, Sarah Eom, Majda Hadziahmetovic, Maria Gorlatova
Intelligent Interactive Internet of Things (I^3T) Lab, Duke University

Introduction

- Augmented Reality offers valuable assistance to eye surgeons by providing contextual guidance overlays
- In certain ophthalmic microsurgeries, the guidance needs to be precisely placed on top of a magnifying lens
- The magnifying lens poses challenges such as lighting, glare, and lens blurriness, which can greatly impact the accuracy of the overlays

I created a *digital twin,* a precise virtual representation of the real magnifying glass with the same behavior, to overlay guidance insusceptible to environmental distractions

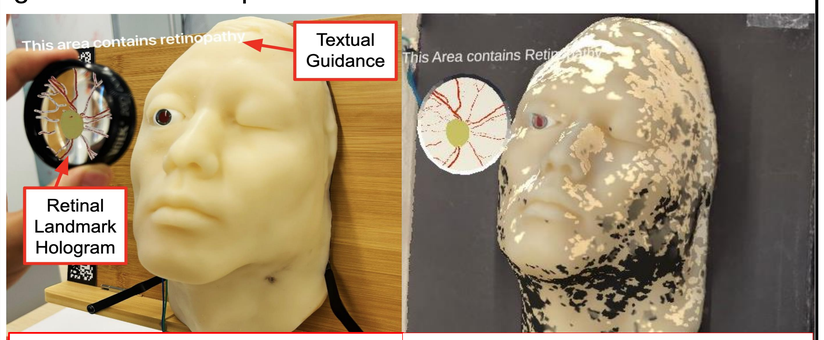

Ophthalmic Microsurgery

- Retinal Laser Therapy is a common ophthalmic microsurgery performed to seal leaking blood vessels in the eye using a laser
- Commonly used to treat patients with diabetic macular edema
- Challenges: prolonged training and inverted image on magnifying lens

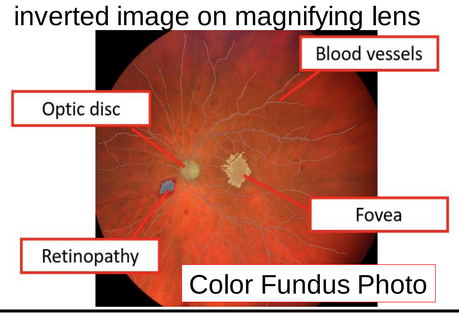

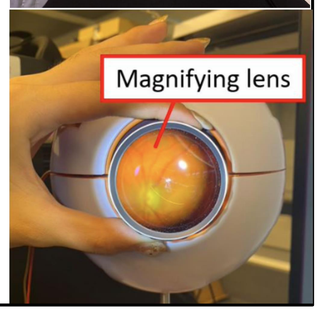

Magnifying Lens Digital Twin

Replicating the Real Lens Virtually

- Hardware: 3D Modeling, 3D Reconstruction, photogrammetry

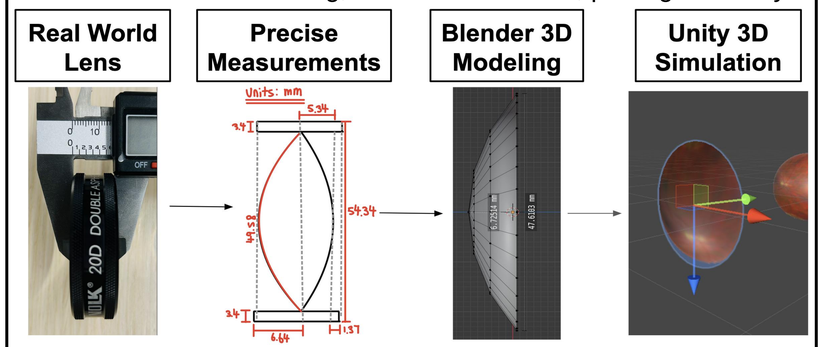

Physics-based Magnification Calibration

- Software: Thin Lens Equation, focal length to FOV conversion

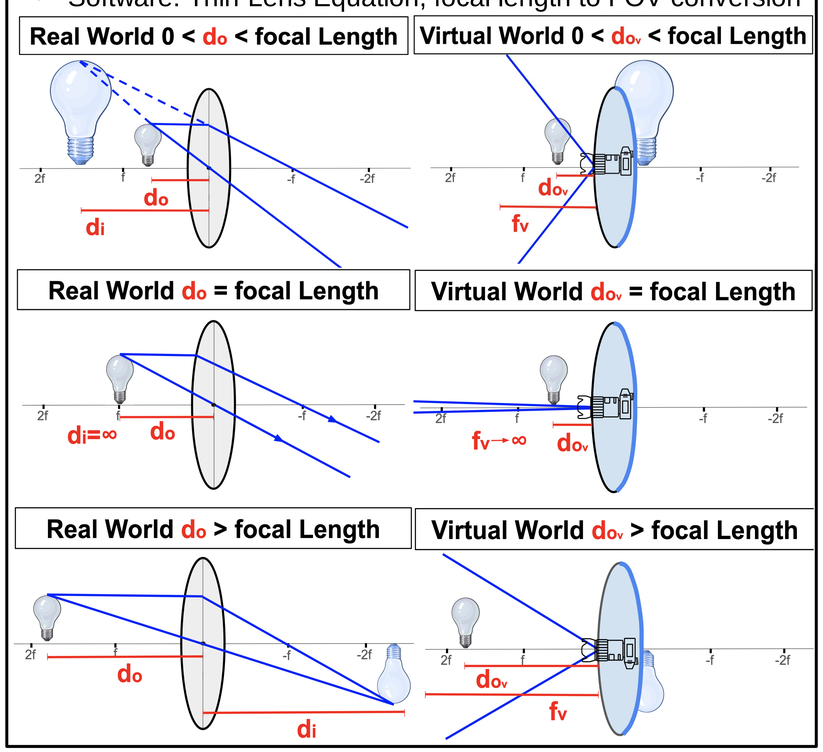

Related Publications

[1] Sangjun Eom, David Sykes, Shervin Rahimpour, and Maria Gorlatova. 2022. NeuroLens: augmented reality-based contextual guidance through surgical tool tracking in neurosurgery. In *Proc. IEEE ISMAR.*

Preliminary Results

Real vs Virtual Images at Different Object-to-Lens Distance

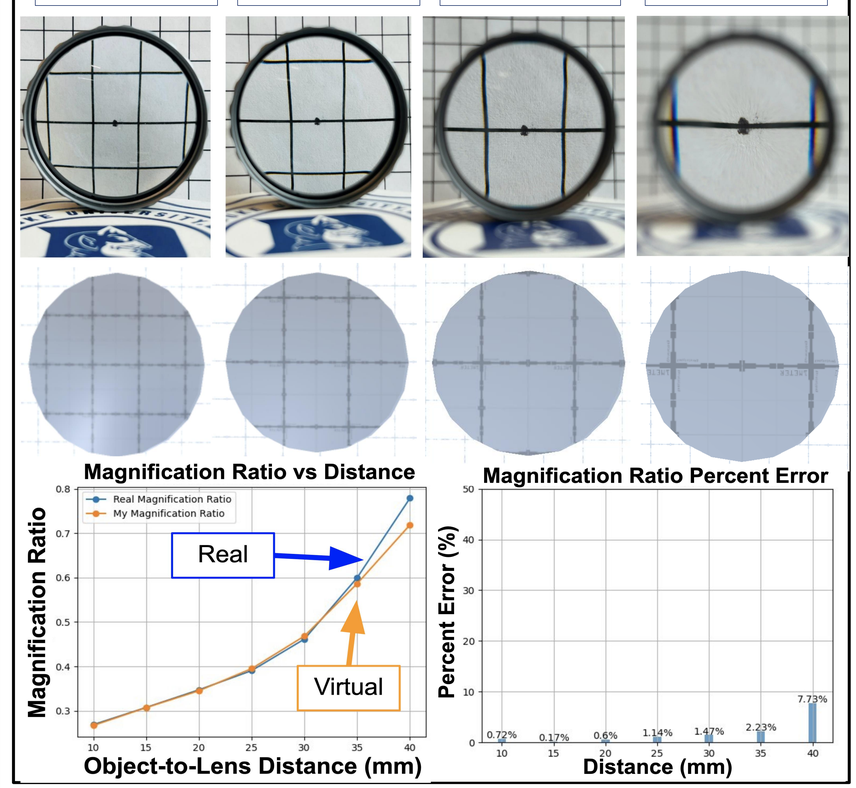

Conclusions & Future Work

- The Virtual Magnifying Glass offers robust hologram guidance overlays unaffected by environmental factors, ensuring precise visualization-based guidance for users
- We are further assessing the effectiveness of the digital twin magnifying glass using HoloLens 2, alongside conducting user studies with retina specialists to fully evaluate its performance in ophthalmic surgical scenarios

Acknowledgements

This work was supported in part by NSF grants CNS-2112562 and CNS-1908051, NSF CAREER Award IIS-2046072, and by a Thomas Lord Educational Innovation Grant.