PCB defect detection algorithm based on improved YOLOv8

*Hanhan Wang
College of Information Science and Technology, Hangzhou Normal University, Hangzhou, China
*319783132@qq.com

Shanhu Shen
College of Information Science and Technology, Hangzhou Normal University, Hangzhou, China
20130006@hznu.edu.cn

Mingze Li
College of Information Science and Technology, Hangzhou, Normal University, Hangzhou, China
13936874090@163.com

2024 5th International Conference on Electronic Communication and Artificial Intelligence (ICECAI) | 979-8-3503-8694-3/24/$31.00 ©2024 IEEE | DOI: 10.1109/ICECAI62591.2024.10675028

***Abstract*——Aiming at the problems of low detection accuracy and large model of most current printed circuit board (PCB) defect detection algorithms, which are not conducive to mobile deployment, an improved YOLOv8 algorithm is proposed to realize effective processing of this problem. The algorithm uses GhostNet and HGNetV2 as the backbone of YOLOv8 to provide higher feature extraction rate and better performance, and effectively reduce the number of parameters. The small detection layer and coordinate attention mechanism are added to improve the detection ability of PCB defects. The content-aware reassembly of features (CARAFE) is used to replace the nearest upsampling operator, which ensures the lightweight of the model and makes full use of the feature semantic information to further improve the detection accuracy. Experimental results show that compared with the original YOLOv8 algorithm, the average detection accuracy of the improved YOLOv8 algorithm is increased by 1.6%, reaching 97.2%; Recall rate increased by 2.0% to 93.7%; The number of parameters is reduced by 23.9%, the model size is only 4.86MB, and the detection speed reaches 201.4fps. This algorithm can meet the requirements of industrial detection.**

***Keyword-component*: PCB defect detection; Improved YOLOv8; GhostNet; HGNetV2; Small target detection layer; Coordinate Attention; CARAFE**

I. INTRODUCTION

As a core component of electronic products, any defect in the printed circuit board can lead to product performance degradation or even failure. Effective defect detection can ensure that the PCB produced meets the quality standards, the durability and reliability of the product are improved, reduce after-sales maintenance costs, and enhance the competitiveness of the enterprise[1]. The manufacturing process of PCB is very complex, and the production steps are very complicated, so it is easy to produce a variety of defects in the production process. The six most common defects are missing hole, mouse bite, spur, short circuit, open circuit, and spurious copper. The existence of defects will reduce the service life of electronic products and even cause industrial accidents. Therefore, the research on PCB defect detection algorithm is very important[2].

There are mainly the following traditional PCB defect detection methods: manual visual inspection, online instrument inspection (ICT), image processing based inspection[3][4] and deep learning based inspection[5]. These methods do not meet the requirements of modern industry for accuracy, speed and simplicity.

Therefore, PCB defect detection algorithm based on deep learning technology came into being. Through deep learning and computer vision and other technologies, efficient and accurate automatic detection can be achieved, improve detection efficiency and accuracy, and solve the drawbacks of traditional methods.

II. YOLOV8 NETWORK STRUCTURE

YOLOv8 network mainly includes Backbone, feature fusion Neck and prediction Head. The network architecture adopted by YOLOv8 is shown in Figure 1 [6][7].

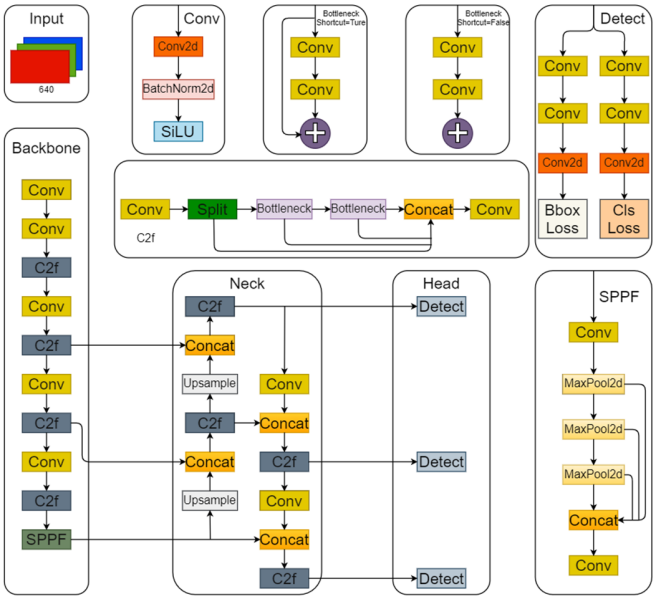

Figure 1. YOLOv8' network structure

III. IMPROVED YOLOV8-BASED ALGORITHM FOR DETECTING PCB DEFECTS

A Backbone network backbone improvement

In the industrial application scenario of PCB defect detection, the inspection model usually needs to be deployed to the mobile end. The YOLOv8 backbone network CSPDarkNet53 is capable of achieving the necessary detection

Authorized licensed use limited to: SHANGHAI UNIVERSITY. Downloaded on December 19,2025 at 09:48:38 UTC from IEEE Xplore. Restrictions apply.

accuracy, however it falls short in meeting the demands of industrial detection due to excessive parameters, complex structure and large model volume.

In this paper, HGNetV2[8] is used as the Backbone of YOLOv8, and GhostConv[9] is used to improve it based on HGNetV2.

B Add small target detection layer

In image processing, the shallow receptive field has a smaller scope and pays more attention to image details, while the deep receptive field has a broader scope and pays more attention to image semantic content. As shown in the figure 2 below, most defects found in the PCB defect dataset are small targets, and the addition of shallow features is conducive to improving the detection accuracy.

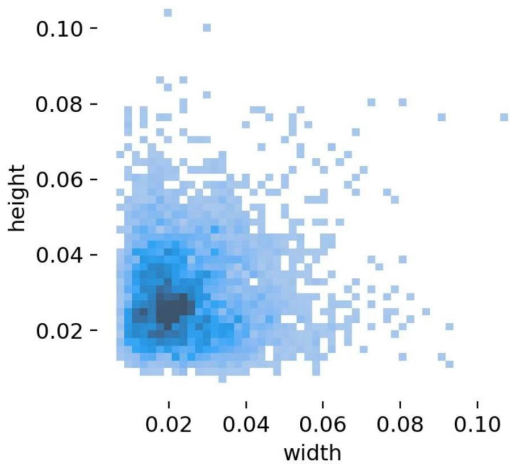

Figure 2. Target box size distribution

C Add coordinate attention

In order to improve the model's capability in identifying small objectives such as PCB defects, this paper adds Coordinate Attention (CA) in the neck part[10]. As show in figure 3.

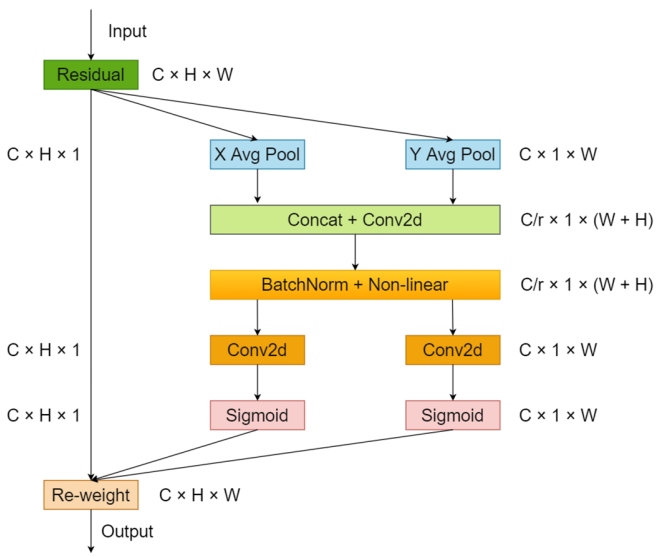

Figure 3. CA' structure

By integrating spatial coordinates into channel attention, mobile networks can gather a wider range of data without adding significant overhead. To prevent the loss of location information from two-dimensional global pooling, the separated channel attention is transformed into two parallel one-dimensional features, allowing for efficient integration of spatial coordinate information into the resulting attention maps.

Two global pooling operations in one dimension are utilized to combine input features into two direction-sensitive feature maps, one along the vertical direction and the other along the horizontal direction. These feature maps contain orientation information and are further transformed into attention maps, each capturing long-range dependencies of the input feature maps in a specific spatial direction. As a result, location details can be preserved within the resulting attention map. The two attention maps are then employed to enhance the representation of the attention area within the input feature map through multiplication.

D Upsampling operator improvement

The YOLOv8 model uses the nearest upsampling operator to determine the upsampling kernel by the spatial position of pixels, which limits its ability to fully leverage semantic information from feature maps and has a small receptive field. CARAFE can enlarge the receptive field and effectively utilize semantic information from feature maps while maintaining a lightweight design.[11].

CARAFE is composed of two main parts: the kernel prediction module and the content-aware reorganization module. The kernel prediction module forecasts a recombination kernel based on the content of each target location, while the content-aware recombination module combines according to the acquired recombination check features. Assuming that the input feature map Y has dimensions of C×H×W and an upsample rate of β, CARAFE will generate a new feature map with a size of C× βh × βw. For any designated destination of the result Y ', p'=(i', j'), in the input has a corresponding source position Y, p=(i, j), in which i=[i'/β], j=[j'/β]. Each target location requires a recombination kernel, which is generated by a convolution layer with a convolution kernel size of $k_{encoder}$ and a recombination kernel size of k_{up}. N(Y_p, k) is denoted as the k×k subregion of Y centered on p, that is, the neighborhood of Y_p. The module Φ for kernel prediction predicts the location kernel $W_{p'}$ at each location p' by considering the neighborhood of Y_p, as illustrated in equation (1).The content-aware recombination module φ recombines Y_p's neighborhood with the location kernel $W_{p'}$, as shown in formula (2).

$$W_{p'} = \Phi(\mathrm{N}(Y_p, k_{encoder})) \tag{1}$$

$$Y'_{p'} = \varphi(\mathrm{N}(Y_p, k_{up}), W_p) \tag{2}$$

E Improved model structure

Based on the above discussion, Figure 4 illustrates the structure of the improved YOLOv8 model proposed in this study.

Authorized licensed use limited to: SHANGHAI UNIVERSITY. Downloaded on December 19,2025 at 09:48:38 UTC from IEEE Xplore. Restrictions apply.

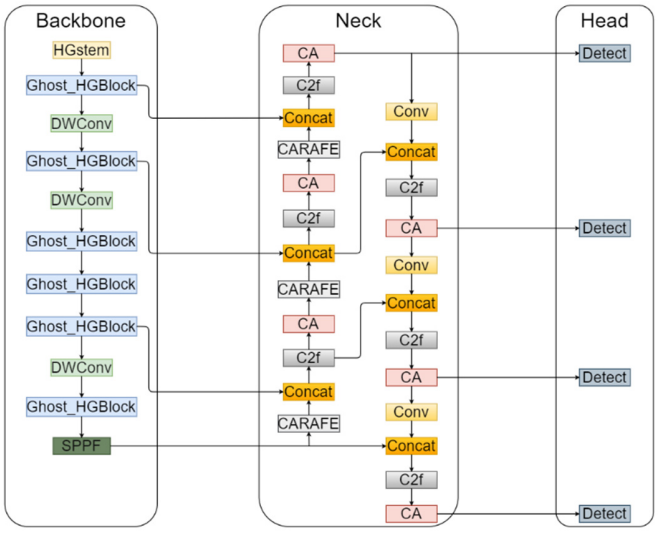

Figure 4. Network structure of improved YOLOv8

IV. EXPERIMENTAL RESULTS AND ANALYSIS

A Data set and defect expansion

The experimental dataset utilized in this paper consists of printed circuit board (PCB) defect data set released by the Open Laboratory of Intelligent Robots of Peking University[12], it comprises a public synthetic PCB dataset with 1386 images, among which 693 images with labels have 6 defects. Another 693 were rotated at random angles without labels. Due to the small amount of data in the original data set, it is easy to overfit the model during training, so data expansion is needed.

Considering that the PCB photos taken in the actual detection might have some tilt, the other 693 images after random rotation were labeled with labelimg software. At this time, the sample size was expanded to 1386.

Considering that PCB photos taken in the actual test may have some blurring due to out-of-focus, Gaussian blurring was performed on these 1386 photos, and the sample number was expanded to 2772.

The 2772 data samples were divided into training sets (1940 sets), verification sets (554 sets) and test sets (278 sets) in a ratio of 7:2:1. As show in figure 5.

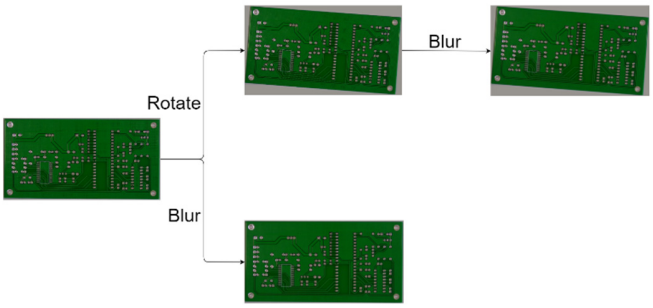

Figure 5. Data expansion

B Experimental environment and network training parameters

The experimental environment of this paper is as follows: Operating system: Windows 10 (64-bit), CPU: Intel(R) Core(TM) i9-14900K 3.20GHz, memory: 32.0GB, GPU: NVIDIA GeForce RTX 4090, video memory: 4GB, deep learning framework: PyTorch2.2.1, GPU accelerated library: CUDA12.1

The training parameters for the network in this paper are detailed in Table 1.

Table 1. Network Training Parameter

Parameter	Value
Pretrained	False
Epoch	200
Batch size	16

C Experimental results and analysis

1) Evaluation criteria

The evaluation indexes used in this experiment are as follows. The model's performance is evaluated using Precision (P), Recall (R), Mean Average Precision (mAP), Parameters, and Frames Per Second (FPS). Precision represents the proportion of samples in which the model predicts a positive result that is actually positive. Recall represents the number of samples that the model correctly predicts to be positive as a percentage of all actual positive samples. mAP (Mean Average Precision) is the average Precision under the precision-recall curve, which evaluates the accuracy of the model by calculating the average precision of different classes. In object detection tasks, mAP is often used to measure the performance of a model when detecting multiple object categories. The number of parameters indicates the model size, and smaller models are easy to deploy on industrial equipment. Frames Per Second (FPS) represents the number of image frames a model processes per second and is often used to evaluate the model's performance in real-time applications, such as object detection in video streams. A higher FPS means that the model can process the image faster and can achieve smoother real-time inspection results. The calculation formula is as follows:

$$Precision = \frac{TP}{TP+FP} \tag{3}$$

$$Recall = \frac{TP}{TP+FN} \tag{4}$$

$$mAP = \frac{1}{n}\sum_{i=1}^{n} AP_i \tag{5}$$

$$FPS = \frac{Fn}{T} \tag{6}$$

In the above formula, TP indicates the accurate classification of positive samples by the model; FP denotes the count of samples that are inaccurately categorized as positive by the model. FN indicates the quantity of samples erroneously classified as negative by the model; AP_i indicates class i accuracy; Fn indicates the number of images detected; T represents the total time spent on detection.

2) Ablation experiment

As show in table 2.

Authorized licensed use limited to: SHANGHAI UNIVERSITY. Downloaded on December 19,2025 at 09:48:38 UTC from IEEE Xplore. Restrictions apply.

Table 2. Comparison Of Ablation Results

experiment	GhostHGNetV2	P2	CA	CARAFE	mAP50/%	R/%	Parameters/(×10^6)
1					95.6	91.7	3.01
2	√				95.0	90.5	2.31
3	√	√			96.6	92.3	2.22
4	√	√	√		97.0	92.9	2.25
5	√	√	√	√	97.2	93.7	2.29

In experiment 2, the combination of GhostNet and HGNetV2 was used as the feature extraction network, which made the model more lightweight and reduced model parameters by 23.18%, but at the same time, the detection accuracy was slightly reduced. Experiment 3 and experiment 4 added small target detection layer and coordinate attention mechanism to strengthen the feature extraction ability of the model. Compared with the original yolov8, mAP50 increased by 1.4% and the recall rate increased by 1.2%. In experiment 5, CARAFE was used to replace the nearest upsampling operator in the Neck layer, and mAP50 was increased by 0.2% compared with experiment 4.

3) Contrast experiment

In the identical experimental setting and with the same network training parameters, we compare the performance with traditional algorithms used in target detection (YOLOv3, YOLOV3-TINY, YOLOv5-p6, YOLOv6, and YOLOv8). The findings from the experiment are presented in Table 3.

Table 3. Compared With the Classical Algorithm

algorithm	mAP50/%	Detection speed/fps	Parameters/(×10^6)	Model size /MB
YOLOv3	98.8	108.4	103.67	207.8
YOLOv3-tiny	86.8	768.6	12.13	24.4
YOLOv5-p6	95.1	371.0	4.13	8.6
YOLOv6	94.8	499.3	4.23	8.7
YOLOv8	95.6	461.0	3.01	5.97
Ours	97.2	201.4	2.29	4.86

It is evident from Table 3 that the performance of the proposed algorithm surpasses that of other traditional algorithms in terms of evaluation criteria such as parameter count and model size. The detection accuracy of mAP50 is slightly lower than that of YOLOv3, but the model size of YOLOv3 is as high as 207.8MB, which completely fails to meet the requirements of industrial deployment. Although the detection speed is slightly lower than that of YOLOv3-tiny, YOLOv5, YOLOv6, and YOLOv8, the proposed algorithm's detection speed of 216.6fps meets the industrial requirements for PCB defect detection.

4) Experimental results presentation

In order to show the improvement of model performance, this paper selected images in different scenarios in the test set and compared the model detection effects before and after the improvement, so as to clearly show the differences brought by the improvement in this paper. The test results are shown in Figure 6. The left side is the test result of the original YOLOv8, and the right side is the test result of the improved YOLOv8.

(a) Original picture

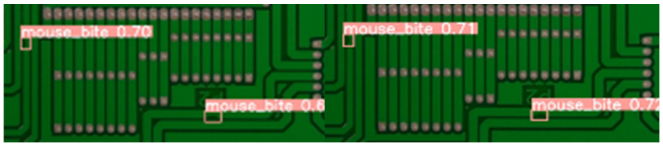

(b) Blurry picture

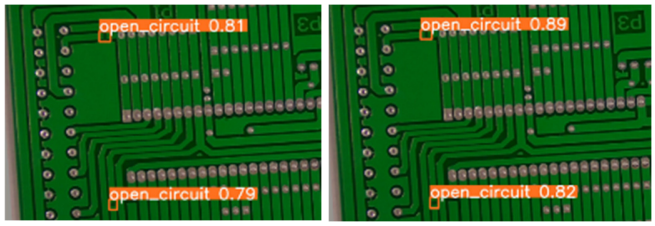

(c) Rotating picture

Figure 6. Comparison of detection effect

V. CONCLUSIONS

To address the issues of limited precision in detecting PCB defects and the excessive size of current detection models, which are not conducive to mobile deployment, this study presents a novel algorithm for detecting defects in PCB, which is based on improved YOLOv8 model and is designed to be lightweight. First, the PCB open source data set of Peking University was selected, and the rotating and blurred PCB pictures were added to enhance the robustness of the model. The improved model uses the combination of GhostNet and HGNetV2 as the backbone of YOLOv8, adding a small target detection layer and coordinate attention mechanism. The content-aware reassembly of features (CARAFE) module is used to replace the nearest neighbor on the adoption operator. The experimental results show that compared with the original YOLOv8, the accuracy of the improved algorithm is increased by 1.6%, the recall rate is increased by 2.0%, the number of parameters is reduced by 23.9%, the model size is reduced by 18.6% to 4.86MB, and the detection speed reaches 201.4fps. Therefore, the algorithm in this paper can meet the requirements

Authorized licensed use limited to: SHANGHAI UNIVERSITY. Downloaded on December 19,2025 at 09:48:38 UTC from IEEE Xplore. Restrictions apply.

of industrial detection and deployment. How to improve the detection ability of very small or partially occluded defects is the next major work.

ACKNOWLEDGE

Foundation: This research was supported by Zhejiang Provincial Natural Science Foundation of China under Grant No. LQ19F040006

REFERENCES

[1] A. Bhattacharya and S.G. Cloutier. "End-to-end deep learning framework for printed circuit board manufacturing defect classification", Sci Rep, vol. 12, no. 12559, 2022.

[2] V.A. Adibhatla, H.-C. Chih, C.-C. Hsu, et al. "Defect Detection in Printed Circuit Boards Using You-Only-Look-Once Convolutional Neural Networks", Electronics, vol. 9, pp. 1547, 2020.

[3] Bonello Daniel, Iano Yuzo and Neto Umberto. "A New Based Image Subtraction Algorithm for Bare PCB Defect Detection", International Journal of Multimedia and Image Processing, vol. 8, pp. 438-442, 2018.

[4] R Geetha and M. Bharathi. Printed Circuit Board Defect Detection Using Mathematical Expression in Image Processing, 2021.

[5] Liying Cheng, Wenya Zhang, Qiang Cheng, et al. PCB defect detection technology based on Deep learning [J]. Journal of Shenyang Normal University (Natural Science Edition),2024,(2): 151-156.

[6] Bichuan Zhang, Weidong Liu, Hao Mi, et al. Helmet detection based on lightweight YOLOv8 [J]. Computer & Telecommunications,2024,(101): 35-39.

[7] Shifeng Dong, Rujing Wang, Jianming Du, et al. Enhancement-fusion feature pyramid network for object detection.[J].Journal of Electronic Imaging,2023,Vol.32(1): 13045(1-14).

[8] Wenyu Lv, Yian Zhao, Shangliang Xu, et al. DETRs Beat YOLOs on Real-time Object Detection[J].2023.

[9] Kai Han, Yunhe Wang, Qi Tian, et al. GhostNet: More Features from Cheap Operations[J].2020.

[10] Qibin Hou, Daquan Zhou, Jiashi Feng. Coordinate Attention for Efficient Mobile Network Design[J].2021.

[11] Jiaqi Wang, Kai Chen, Rui Xu, et al. CARAFE: Content-Aware ReAssembly of FEatures[J].2019.

[12] Ding R, Dai L, Li G, et al. "TDD-net: a tiny defect detection network for printed circuit boards[J]", CAAI Transactions on Intelligence Technology, vol. 4, no. 2, pp. 110-116, 2019.

Authorized licensed use limited to: SHANGHAI UNIVERSITY. Downloaded on December 19,2025 at 09:48:38 UTC from IEEE Xplore. Restrictions apply.