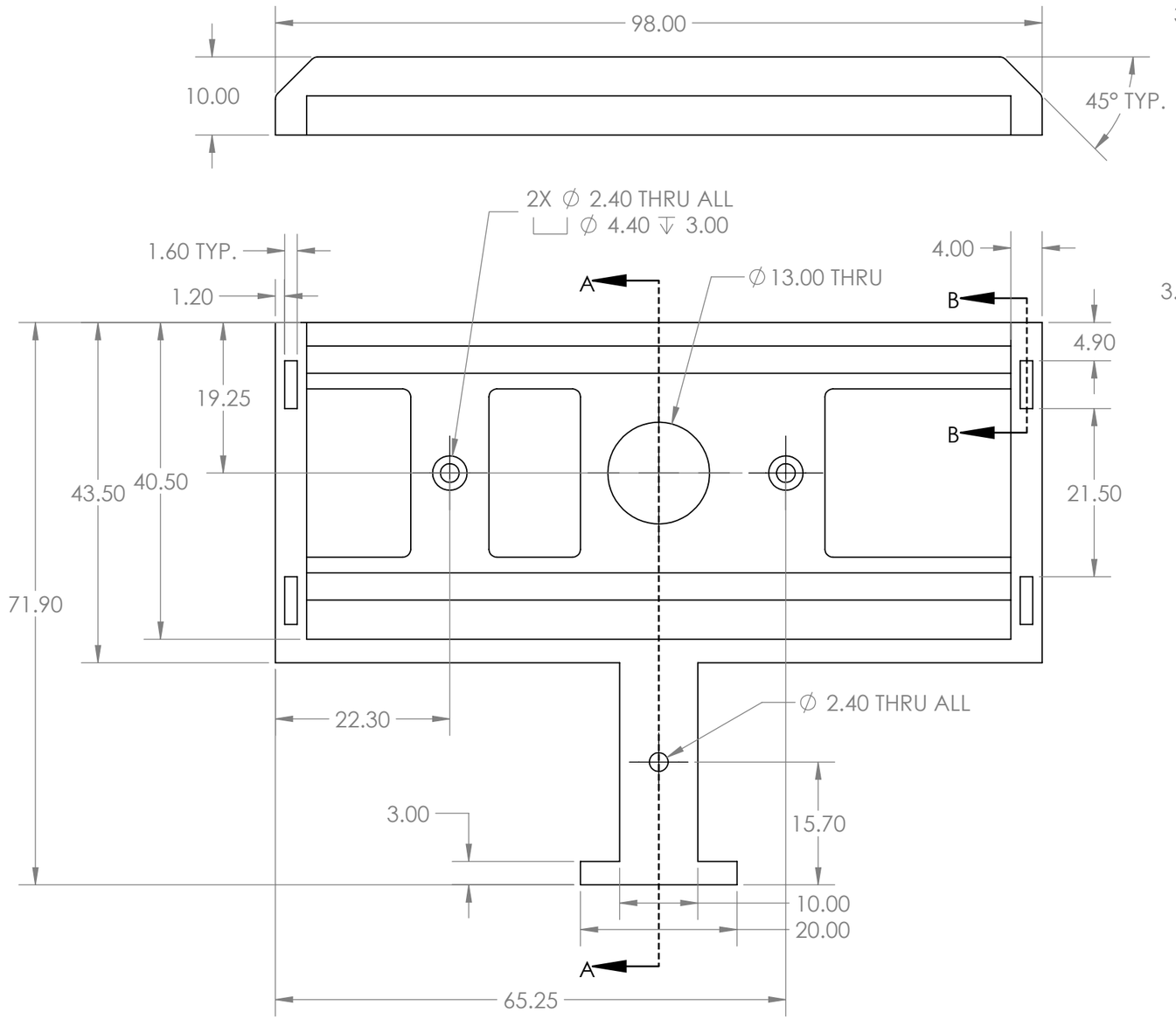

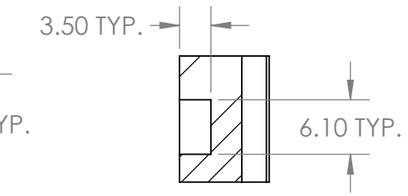

SECTION B-B

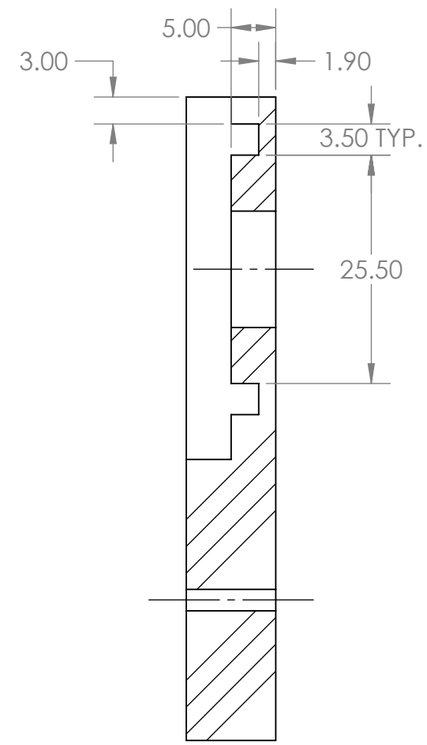

SECTION A-A

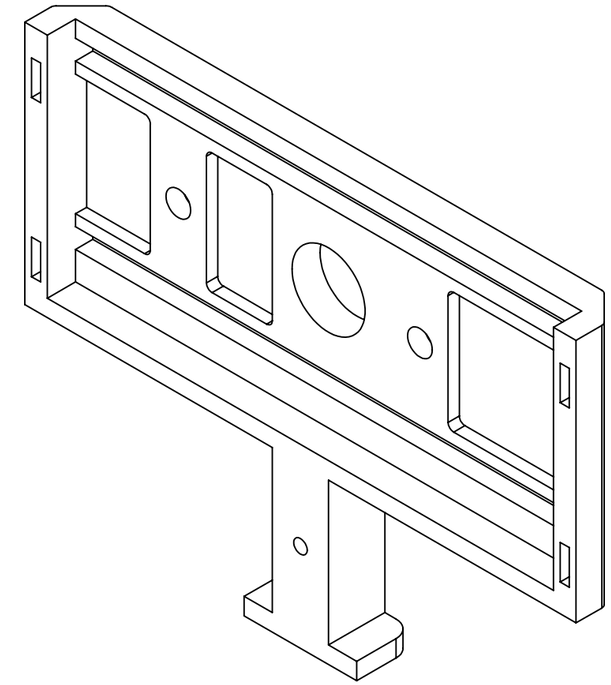

SCALE: NTS

UNLESS OTHERWISE SPECIFIED:		NAME	DATE
DIMENSIONS ARE IN MILLIMETERS TOLERANCES: ANGULAR: ± 1° TWO PLACE DECIMAL: ±0.05 THREE PLACE DECIMAL: ±0.001	DRAWN	LC	
	CHECKED		
	ENG APPR.		
	MFG APPR.		
INTERPRET GEOMETRIC TOLERANCING PER:	Q.A.		
MATERIAL PLA	COMMENTS:		
FINISH N/A			
DO NOT SCALE DRAWING			

PROPRIETARY AND CONFIDENTIAL
THE INFORMATION CONTAINED IN THIS DRAWING IS THE SOLE PROPERTY OF ME380 GROUP 03 (METALLICA). ANY REPRODUCTION IN PART OR AS A WHOLE WITHOUT THE WRITTEN PERMISSION OF ME380 GROUP 03 (METALLICA) IS PROHIBITED.

ME380 GROUP 03 (METALLICA)

TITLE:
Top Gripper Housing

SIZE	DWG. NO.	REV
B	DEX-102	00

SCALE: 3:2 | Mass: 27.87g | SHEET 1 OF 1

SOLIDWORKS Educational Product. For Instructional Use Only.