ITEM NO.	PART NUMBER	DESCRIPTION	QTY.
1	DEX-102	Top Gripper Housing	1
2	DEX-103	Rack Arm Motor	1
3	DEX-104	Rack Arm Fixed Cup	1
4	DEX-101	Bottom Gripper Housing	1
5	DEX-105	Penta Cup	1
6	DEX-106	Cone Cup	1
7	DEX-110	Dexterity Motor Shaft	2
8	ELEC-002	Smraza S51 Micro Servo Motor	2
9	DEX-108	Gripper Motor Standoff	2
10	DEX-109	Gripper Motor Mount	1
11	DEX-111	Servo Motor Coupling	1
12	DEX-107	Gripper Pinion Gear	1

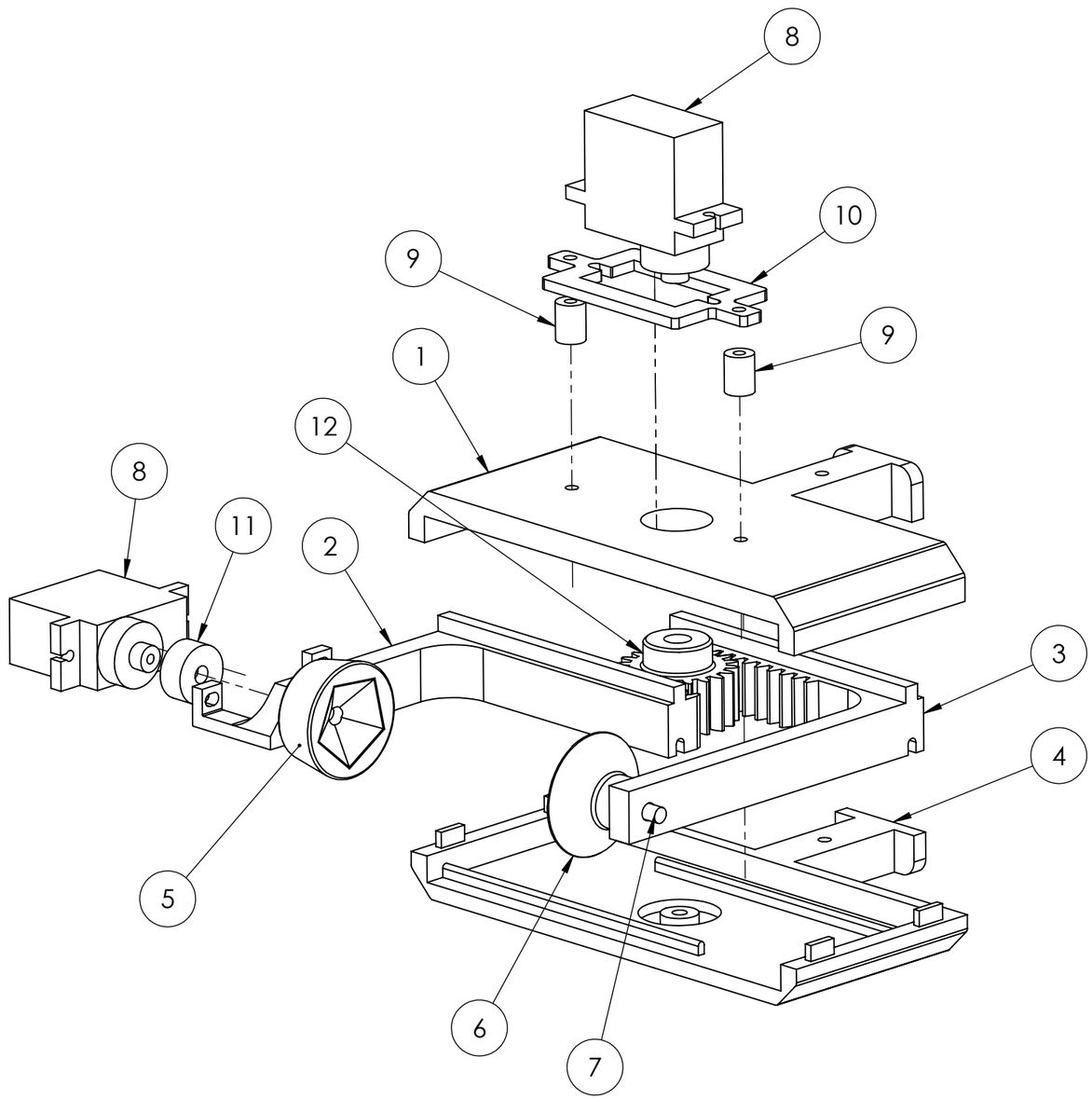

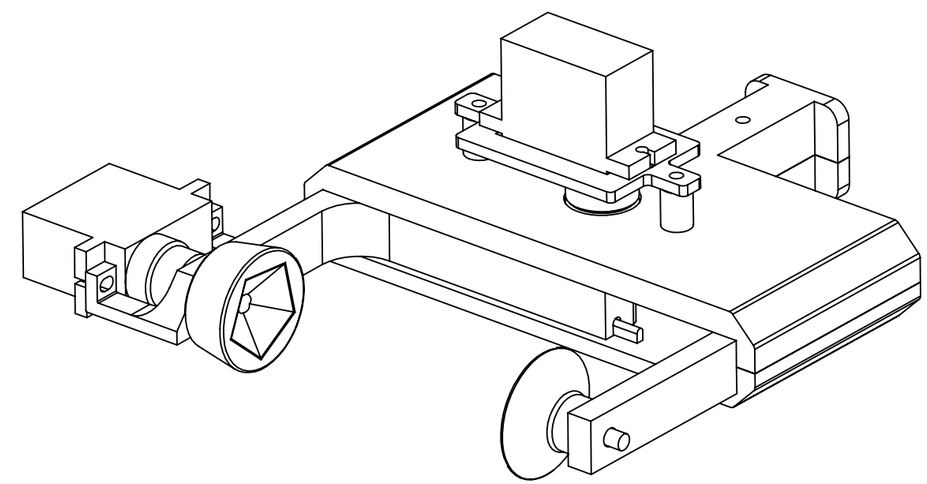

PROPRIETARY AND CONFIDENTIAL
THE INFORMATION CONTAINED IN THIS DRAWING IS THE SOLE PROPERTY OF ME380 GROUP 03 (METALLICA). ANY REPRODUCTION IN PART OR AS A WHOLE WITHOUT THE WRITTEN PERMISSION OF ME380 GROUP 03 (METALLICA) IS PROHIBITED.

UNLESS OTHERWISE SPECIFIED:
DIMENSIONS ARE IN MILLIMETERS
TOLERANCES:
ANGULAR: ± 1°
TWO PLACE DECIMAL: ±0.05
THREE PLACE DECIMAL: ±0.001

INTERPRET GEOMETRIC TOLERANCING PER:

MATERIAL N/A

FINISH N/A

DO NOT SCALE DRAWING

	NAME	DATE
DRAWN	LC	
CHECKED		
ENG APPR.		
MFG APPR.		
Q.A.		

COMMENTS:

ME380 GROUP 03 (METALLICA)

TITLE:

Dexterity Gripper

SIZE **B** | DWG. NO. DEX-100 | REV 00

SCALE: 1:1 | Mass: 96.39g | SHEET 1 OF 1

SOLIDWORKS Educational Product. For Instructional Use Only.