Lecture 10: MOSFET

VE311 Electronic Circuits

Xuyang Lu
2023 Summer

上海交通大學
SHANGHAI JIAO TONG UNIVERSITY

Recap of Last Lecture

- BJT Circuits

Topics to Be Covered

- MOSFET

NMOS FET

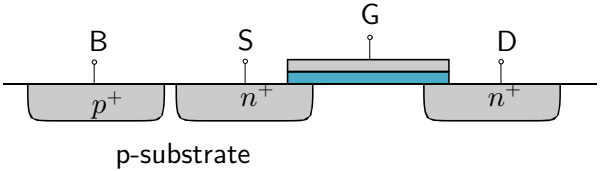

- MOS = Metal-Oxide-Semiconductor
- FET = Field effect Transistor
- CMOS Technology keeps on reducing t_{ox} and L_{eff} (Moore' s Law).
- Substrate (Body) of NMOS is generally connected to ground.
- See Chapter 17 for the introduction of CMOS fabrication technology.

CMOS

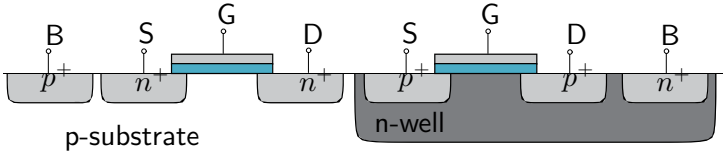

- CMOS = Complementary MOS
- Substrate (Body) of NMOS is generally connected to ground.
- N-well (Body) of PMOS is generally connected to V_{DD}.

Layout

NMOS

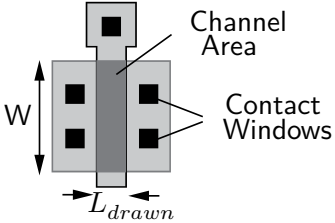

PMOS

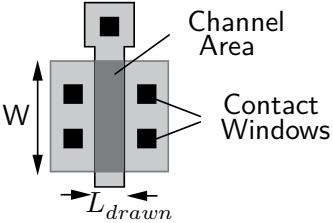

Threshold Voltage (V_{TH}) for NMOS

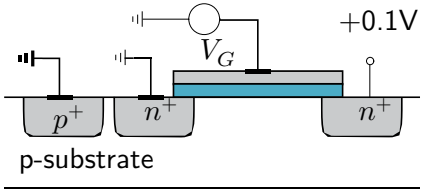

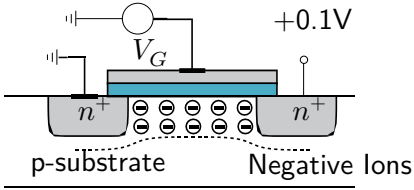

- $V_G = 0V$
- No current flow
- As VG increases from zero, holes in p-substrate are repelled, leaving negative ions (ionized boron dopants) behind to form a **depletion region**.
- Positive charges are mirrored at the gate.

Threshold Voltage (V_{TH}) for NMOS

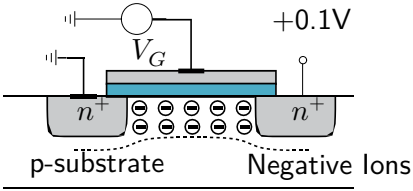

- No charge carriers (electrons or holes) in the channel, so no current flow.
- Higher V_G further increases the width of the **depletion region**.

Threshold Voltage (V_{TH}) for NMOS

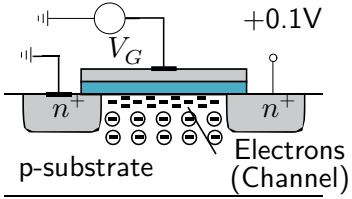

- When V_G reaches a sufficiently positive value, a channel of electrons (**inversion layer**) is formed beneath the gate oxide.
- Electrons flow from "source" to "drain". Equivalently, current flows from "drain" to "source".
- The value of V_G at which the inversion layer forms is the **threshold voltage (V_{TH})**.

Threshold Voltage (V_{TH}) for NMOS

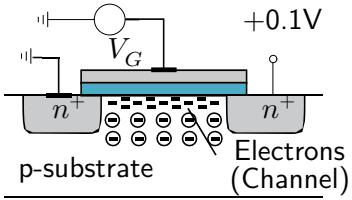

- If V_G rises further, the charges in the depletion region remain relatively constant, whereas the charges in the inversion layer increase rapidly.

NMOS I-V Characteristics (Triode)

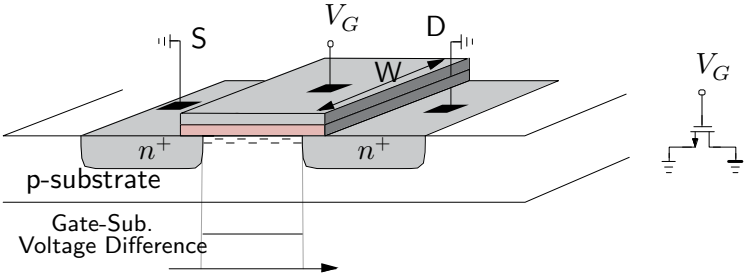

NMOS I-V Characteristics (Triode)

For $V_{GS} \geq V_{TH}$

$$Q = -WL_{eff}C_{ox}(V_{GS} - V_{TH})(\text{unit: coulomb}) \tag{1}$$

$$Q_d = -WC_{ox}(V_{GS} - V_{TH})(\text{unit: coulomb} \cdot m^{-1}) \tag{2}$$

$$\begin{aligned} &C_{ox}(\text{gate oxide capacitance per unit area}) \\ &= \epsilon_{\text{silicon oxide}} / t_{ox} \\ &= \left[8.85 \times 10^{-12}(F/m) \times 3.9\right] / t_{ox} \end{aligned} \tag{3}$$

NMOS I-V Characteristics (Triode)

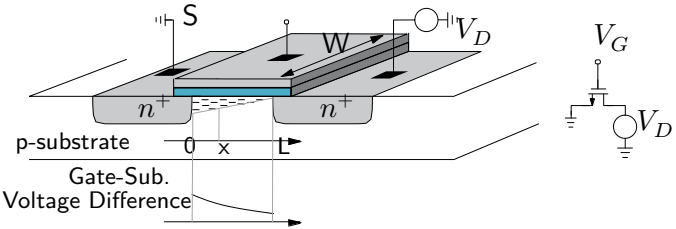

NMOS I-V Characteristics (Triode)

$$I_D = Q_d \times V = Q_d \times (\mu_n \varepsilon) = -WC_{ox}\left[V_{GS} - V_{TH} - V(x)\right] \times (\mu_n \varepsilon) \quad \varepsilon = -dV(x)/dx$$
$$= W_{ox}\left[V_{GS} - V_{TH} - V(x)\right] \times \mu_n \times \frac{dV(x)}{dx} \tag{4}$$

$$\int_{x=0}^{x=L_{\text{eff}}} I_D \cdot dx = \int_{V(0)=0}^{V(L)=V_{DS}} \mu_n C_{ox} W\left[V_{GS} - V_{TH} - V(x)\right] \cdot dV(x) \tag{5}$$

$$I_D = \mu_n C_{ox} \frac{W}{L_{eff}}\left[\left(V_{GS} - V_{TH}\right) V_{DS} - \frac{1}{2} {V_{DS}}^2\right] \quad I_D : \text{constant along channel} \tag{6}$$

NMOS I-V Characteristics (Triode)

$$I_D = \mu_n C_{ox} \frac{W}{L_{eff}} \left[(V_{GS} - V_{TH}) V_{DS} - \frac{1}{2} V_{DS}^2 \right] \tag{7}$$

$$I_{D,\,\text{max}} = \frac{1}{2} \mu_n C_{ox} \frac{W}{L_{eff}} (V_{GS} - V_{TH})^2 \quad V_{DS} = V_{GS} - V_{TH} \tag{8}$$

NMOS I-V Characteristics (Triode)

Deep triode region

$$R_{on} = \frac{1}{\mu_n C_{ox} \left(\frac{W}{L}\right)_{\text{eff}} (V_{GS} - V_{TH})} \qquad (9)$$

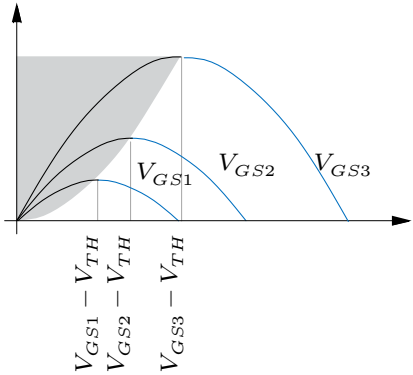

- For digital circuit, MOSFET, as a switch, usually operates in deep triode region.
- This is why reducing t_{ox} and L_{eff} can improve speed.

Saturation Region

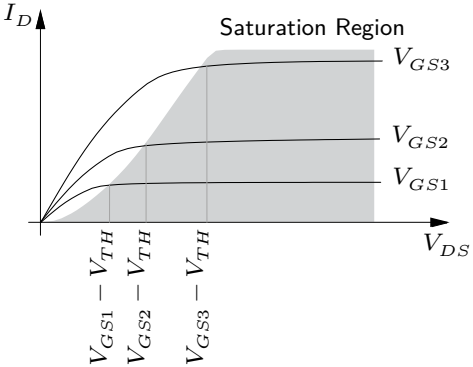

- For $V_{DS} > V_{GS} - V_{TH}$, I_D becomes relatively constant.
- $V_{DS} = V_{GS} - V_{TH}$ is the minimum value for the NMOS to operate in saturation region.

Saturation Region

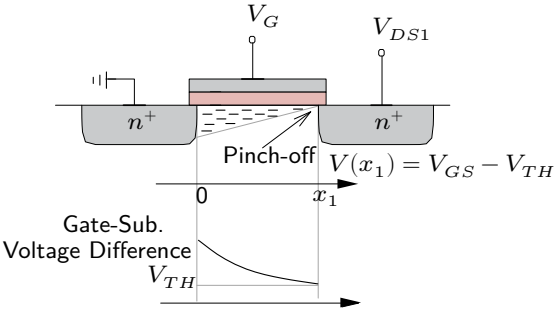

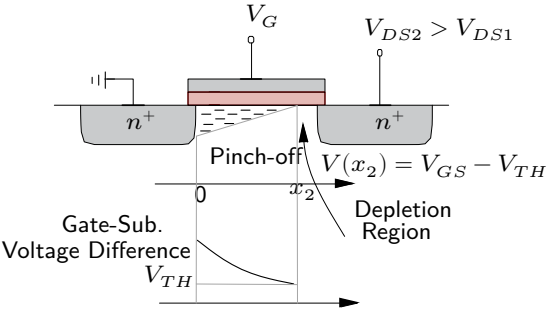

Saturation Region

$$\int_{x=0}^{x=L'} I_D \cdot dx = \int_{V(0)=0}^{V(L')=V_{GS}-V_{TH}} \mu_n C_{ox} W \left[V_{GS} - V_{TH} - V(x)\right] \cdot dV(x) \qquad (10)$$

$$I_D = \frac{1}{2}\mu_n C_{ox} \frac{W}{L'} \left(V_{GS} - V_{TH}\right)^2 \quad (11)$$

I_D: constant along channel
L': the point at which Q_d drops to zero
$V_{GS} - V_{TH}$: the overdrive voltage

- Electron velocity ($v = I_D/Q_d$) becomes tremendously high at the pinch off point ($Q_d \to 0$), such that electrons shoot through the depletion region and arrive at the drain terminal.

Channel-Length Modulation

$$\begin{cases} I_D = \frac{1}{2}\mu_n C_{ox}\frac{W}{L'}\left(V_{GS}-V_{TH}\right)^2 \\ L' = L_{eff} - \Delta L \\ \frac{1}{L'} = \frac{1}{L_{eff}-\Delta L} = \frac{1}{L_{eff}}\cdot\frac{1}{1-\frac{\Delta L}{L_{eff}}} \approx \frac{1}{L_{eff}}\cdot\left(1+\frac{\Delta L}{L_{eff}}\right) \end{cases} \tag{12}$$

$$\begin{aligned} I_D &= \frac{1}{2}\mu_n C_{ox}\frac{W}{L_{eff}}\left(V_{GS}-V_{TH}\right)^2\left(1+\frac{\Delta L}{L_{eff}}\right) \\ &= \frac{1}{2}\mu_n C_{ox}\frac{W}{L_{eff}}\left(V_{GS}-V_{TH}\right)^2\left(1+\lambda V_{DS}\right) \end{aligned} \tag{13}$$

Channel-Length Modulation

$$r_o = \frac{\partial V_{DS}}{\partial I_D} = 1/\frac{\partial I_D}{\partial V_{DS}} \tag{14}$$

$$= \frac{1}{\frac{1}{2}\mu_n C_{ox}\frac{W}{L}\left(V_{GS} - V_{TH}\right)^2 \cdot \lambda} \tag{15}$$

$$\approx \frac{1}{I_D \cdot \lambda} \tag{16}$$

Body Effect

$$V_{TH} = V_{TH0} + \gamma(\sqrt{|2\Phi_F + V_{SB}|} - \sqrt{|2\Phi_F|}) \tag{17}$$

$$\Phi_F = \frac{kT}{q} \ln \frac{N_{sub}}{n_i} \tag{18}$$

$$\gamma = \frac{\sqrt{2q\epsilon_{Si}N_{sub}}}{C_{ox}} \tag{19}$$

$$I_D = \frac{1}{2}\mu_n C_{ox} \frac{W}{L'} (V_{GS} - V_{TH})^2 \tag{20}$$

Body Effect

$$
\begin{aligned}
gm_b &= \frac{\partial I_D}{\partial V_{SB}} = \frac{\partial I_D}{\partial V_{TH}} \cdot \frac{\partial V_{TH}}{\partial V_{SB}} \\
&= -\mu_n C_{ox} \frac{W}{L'} \left(V_{GS} - V_{TH}\right) \cdot \frac{\partial V_{TH}}{\partial V_{SB}} \\
&= -\mu_n C_{ox} \frac{W}{L'} \left(V_{GS} - V_{TH}\right) \cdot \frac{\gamma}{2} \frac{1}{\sqrt{|2\Phi_F + V_{SB}|}} \\
&= -gm \cdot \eta
\end{aligned}
\tag{21}
$$

Body Effect

- V_{GS} increases, I_D increases.
- V_{SB} increases, V_{TH} increases and thus I_D decreases.

Spice Models

NMOS Model			
LEVEL=1	VTO=0.7	GAMMA=0.45	PHI=0.9
NSUB=9e+14	LD=0.08e-6	UO=350	LAMBDA=0.1
TOX=9e-9	PB=0.9	CJ=0.56e-3	CJSW=0.35e-11
MJ=0.45	MJSW=0.2	CGDO=0.4e-9	JS=1.0e-8
PMOS Model			
LEVEL=1	VTO=-0.8	GAMMA=0.4	PHI=0.8
NSUB=5e+14	LD=0.09e-6	UO=100	LAMBDA=0.2
TOX=9e-9	PB=0.9	CJ=0.94e-3	CJSW=0.32e-11
MJ=0.5	MJSW=0.3	CGDO=0.3e-9	JS=0.5e-8

Spice Models

- Simulators such as SPICE and Cadence need accurate models for each device.
- Above is the simplest MOS SPICE model, known as "Level 1," and provide typical values for each parameter corresponding to 0.5-μm technology.

Spice Models

VTO : threshold voltage with zero V_{SB} (unit : V)
GAMMA : body effect coefficient (unit : $V^{1/2}$)
PHI : $2\Phi_F$ (unit : V)
TOX : gate oxide thickness (unit : m)
NSUB : substrate doping (unit : cm^{-3})
LD : source/drain side diffusion (unit : m)
UO : channel mobility (unit : $cm^2/V/s$)
LAMBDA : channel-length modulation coefficient (unit : V^{-1})

Spice Models

CJ : source/drain bottom-plate junction capacitance per unit area (unit : F/m^2)
CJSW : source/drain sidewall junction capacitance per unit length (unit : F/m)
PB : source / drain junction built-in potential (unit : V)
MJ : exponent in CJ equation (unitless)
MJSW : exponent in CJSW equation (unitless)
CGDO: gate-drain overlap capacitance per unit width (unit : F/m)
CGSO : gate-source overlap capacitance per unit width (unit : F/m)
JS : source/drain leakage current per unit area (unit : A/m^2)

Body Effect Example

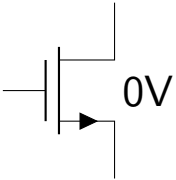

$$(\frac{W_{drawn}}{L_{drawn}}) = \frac{10\mu m}{2\mu m} \tag{22}$$

$$V_{th} = 0.7 + 0.45(\sqrt{0.9+1} - \sqrt{0.9}) \tag{23}$$

$$I_D = \frac{1}{2}\mu_n C_{ox}\left(\frac{W}{L_{eff}}\right)(V_{Gs} - V_{th})^2(1 + \lambda V_{DS}) \tag{24}$$

Lecture 11: MOSFET Circuits

VE311 Electronic Circuits

Xuyang Lu
2023 Summer

上海交通大學
SHANGHAI JIAO TONG UNIVERSITY

Recap of Last Lecture

- MOSFET

Topics to Be Covered

- MOSFET Circuits

Spice Models

NMOS Model			
LEVEL=1	VTO=0.7	GAMMA=0.45	PHI=0.9
NSUB=9e+14	LD=0.08e-6	UO=350	LAMBDA=0.1
TOX=9e-9	PB=0.9	CJ=0.56e-3	CJSW=0.35e-11
MJ=0.45	MJSW=0.2	CGDO=0.4e-9	JS=1.0e-8
PMOS Model			
LEVEL=1	VTO=-0.8	GAMMA=0.4	PHI=0.8
NSUB=5e+14	LD=0.09e-6	UO=100	LAMBDA=0.2
TOX=9e-9	PB=0.9	CJ=0.94e-3	CJSW=0.32e-11
MJ=0.5	MJSW=0.3	CGDO=0.3e-9	JS=0.5e-8

Spice Models

- Simulators such as SPICE and Cadence need accurate models for each device.
- Above is the simplest MOS SPICE model, known as "Level 1," and provide typical values for each parameter corresponding to 0.5-μm technology.

Spice Models

VTO : threshold voltage with zero V_{SB} (unit : V)
GAMMA : body effect coefficient (unit : $V^{1/2}$)
PHI : $2\Phi_F$ (unit : V)
TOX : gate oxide thickness (unit : m)
NSUB : substrate doping (unit : cm^{-3})
LD : source/drain side diffusion (unit : m)
UO : channel mobility (unit : $cm^2/V/s$)
LAMBDA : channel-length modulation coefficient (unit : V^{-1})

Spice Models

CJ : source/drain bottom-plate junction capacitance per unit area (unit : F/m^2)
CJSW : source/drain sidewall junction capacitance per unit length (unit : F/m)
PB : source / drain junction built-in potential (unit : V)
MJ : exponent in CJ equation (unitless)
MJSW : exponent in CJSW equation (unitless)
CGDO: gate-drain overlap capacitance per unit width (unit : F/m)
CGSO : gate-source overlap capacitance per unit width (unit : F/m)
JS : source/drain leakage current per unit area (unit : A/m^2)

Body Effect Example

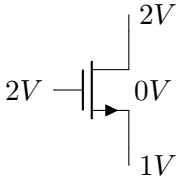

$$\left(\frac{W_{drawn}}{L_{drawn}}\right) = \frac{10\mu m}{2\mu m} \qquad (1)$$

$$V_{th} = 0.7 + 0.45(\sqrt{0.9+1} - \sqrt{0.9}) \qquad (2)$$

$$I_D = \frac{1}{2}\mu_n C_{ox}\left(\frac{W}{L_{eff}}\right)(V_{GS} - V_{TH})^2(1 + \lambda V_{DS}) \qquad (3)$$

Body Effect Example

$$\lambda \neq 0 \quad \gamma \neq 0 \tag{4}$$

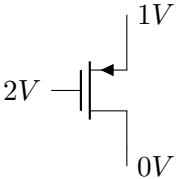

$$V_{th} = 0.7 + 0.45(\sqrt{0.9+1} - \sqrt{0.9}) \tag{6}$$

$$I_D = \frac{1}{2}\mu_n C_{ox}\left(\frac{W}{L_{eff}}\right)[(V_{GS} - V_{TH})V_{DS} - \frac{1}{2}V_{DS}^2] \tag{7}$$

$$(\frac{W_{drawn}}{L_{drawn}}) = \frac{10\mu m}{2\mu m} \tag{5}$$

Body Effect Example

Sketch I_D as a function of V_X increasing from $-\infty$ to 0. Assume $V_{TH} = 0.6V$, $\gamma = 0.4V^{1/2}$ and $2\Phi_F = 0.7V$.

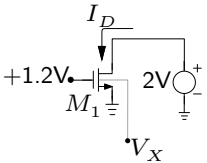

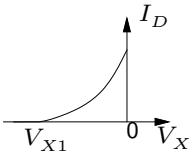

Solution: $1.2 = 0.6 + 0.4\left(\sqrt{0.7 - V_X} - \sqrt{0.7}\right), V_X = -4.76\ V$

Drain-induced Barrier Lowering

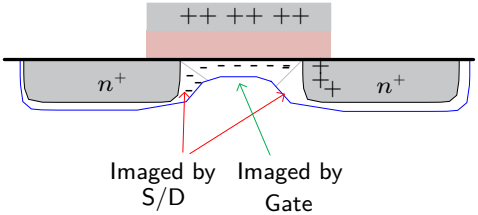

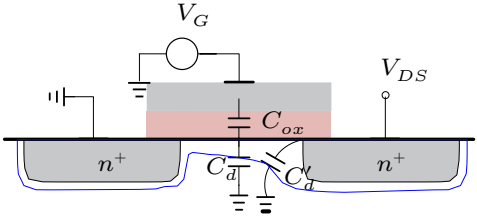

In short-channel devices, the drain is close enough to gate the channel, and so a high drain voltage can open the bottleneck and turn on the transistor prematurely.

Drain-induced Barrier Lowering

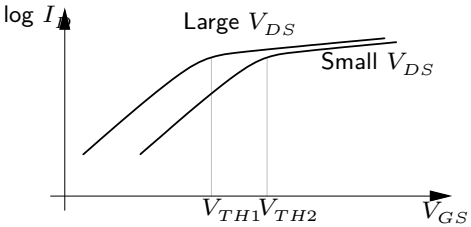

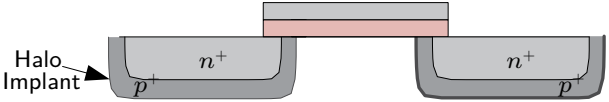

In short-channel devices, the drain is close enough to gate the channel, and so a high drain voltage can open the bottleneck and turn on the transistor prematurely.

NMOS vs PMOS

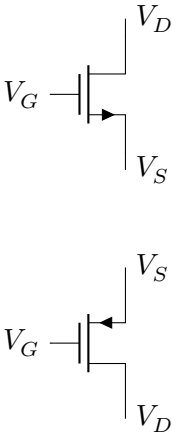
V_D
V_G
V_S
V_S
V_G
V_D

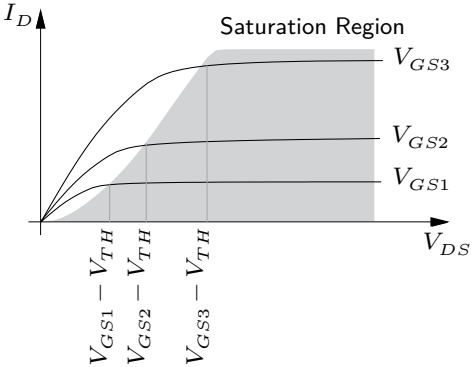
I_D
Saturation Region
V_{GS3}
V_{GS2}
V_{GS1}
V_{DS}
$V_{GS1} - V_{TH}$
$V_{GS2} - V_{TH}$
$V_{GS3} - V_{TH}$

PMOS Example

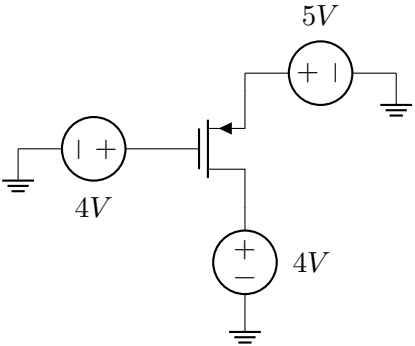

Small-Signal Example

$$\left(\frac{W_{drawn}}{L_{drawn}}\right) = \frac{10\mu m}{2\mu m} \qquad (8)$$

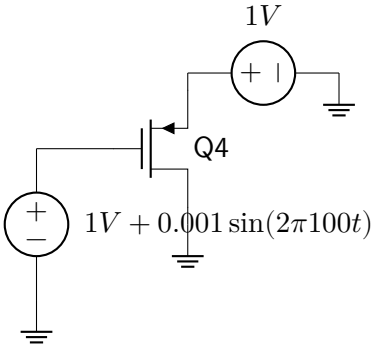

- No bulk connect means ground for NMOS

Transconductance

- For the NMOS operating in the saturation region ($V_{DS} \geq V_{GS} - V_{TH}$):

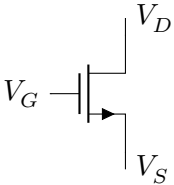

$$I_D = \frac{1}{2}\mu_n C_{ox}\frac{W}{L'}\left(V_{GS} - V_{TH}\right)^2 \quad (9)$$

- ΔV_{GS} results in $\Delta I_D = gm \times \Delta V_{GS}$.

Transconductance

$$g_m = \frac{\partial I_D}{\partial V_{GS}} = \mu_n C_{ox} \frac{W}{L'} (V_{GS} - V_{TH}) = \sqrt{2\mu_n C_{ox} \frac{W}{L'} I_D} = \frac{2I_D}{V_{GS} - V_{TH}} \tag{10}$$

With channel-length modulation

$$g_m = \mu_n C_{ox} \frac{W}{L} (V_{GS} - V_{TH}) (1 + \lambda V_{DS}) \tag{11}$$

$$= \sqrt{2\mu_n C_{ox} (W/L) I_D (1 + \lambda V_{DS})} \tag{12}$$

Transconductance

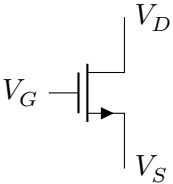

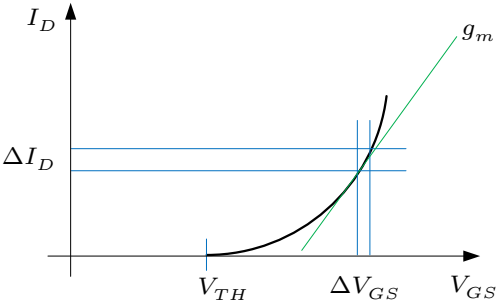

Transconductance

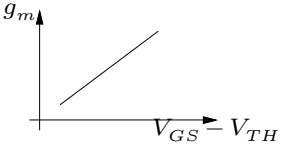

W/L Constant

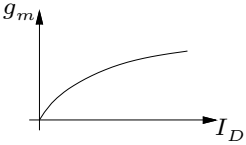

W/L Constant

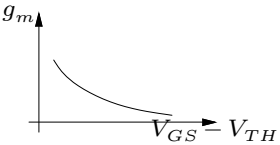

I_D Constant

- For a given NMOS, gm changes according to the DC biasing condition.
- If a small signal is applied to a NMOS with defined biasing values, we assume the signal amplitude is small enough that the variation in gm is negligible.

Small-Signal Model for NMOS

$$r_o = \frac{\partial V_{DS}}{\partial I_D} \tag{13}$$

$$= \frac{1}{\partial I_D / \partial V_{DS}} \tag{14}$$

$$= \frac{1}{\frac{1}{2}\mu_n C_{ox} \frac{W}{L} \left(V_{GS} - V_{TH}\right)^2 \cdot \lambda} \tag{15}$$

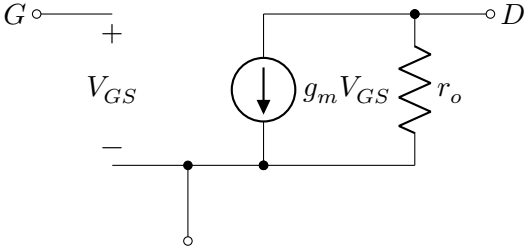

Small-Signal Model for NMOS

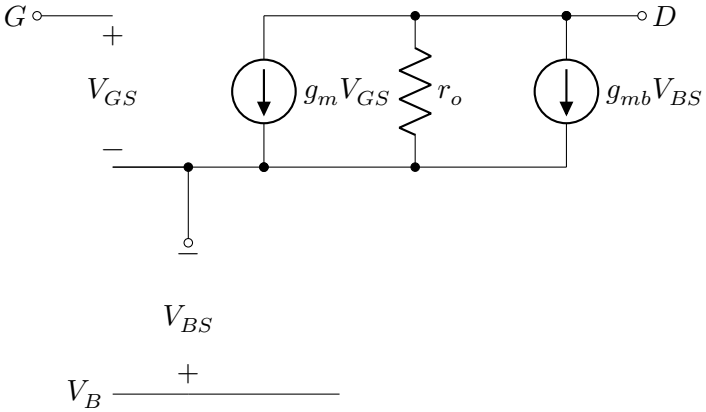

Small-Signal Model for NMOS

$$g_{mb} = \frac{\partial I_D}{\partial V_{BS}} \tag{16}$$

$$= \mu_n C_{ox} \frac{W}{L} \left(V_{GS} - V_{TH}\right) \left(-\frac{\partial V_{TH}}{\partial V_{BS}}\right) \tag{17}$$

$$\frac{\partial V_{TH}}{\partial V_{BS}} = -\frac{\partial V_{TH}}{\partial V_{SB}} \tag{18}$$

$$= -\frac{\gamma}{2} \left(2\Phi_F + V_{SB}\right)^{-1/2} \tag{19}$$

$$g_{mb} = g_m \frac{\gamma}{2\sqrt{2\Phi_F + V_{SB}}} \tag{20}$$

$$= \eta g_m \tag{21}$$

Small-Signal Model for NMOS

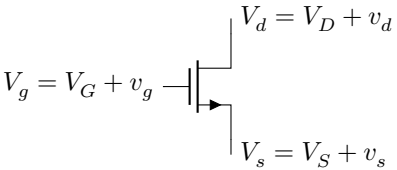

$$\downarrow i_d = g_m \cdot v_{gs} \quad \uparrow i_d = g_{mb} \cdot v_{sb} \quad (22)$$

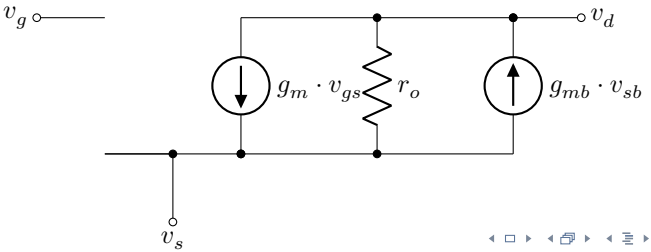

Small-Signal Example

$$\left(\frac{W_{drawn}}{L_{drawn}}\right) = \frac{10\ \mu m}{2\ \mu m} \qquad (23)$$

$$1V + 0.001\sin(2\pi 100t)$$

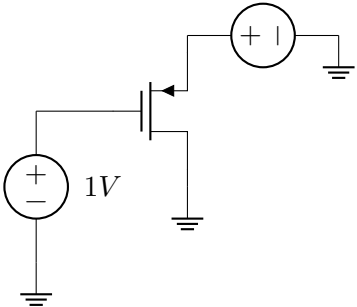

Small-Signal Example

$$\left(\frac{W_{drawn}}{L_{drawn}}\right) = \frac{10\mu m}{2\mu m} \qquad (24)$$

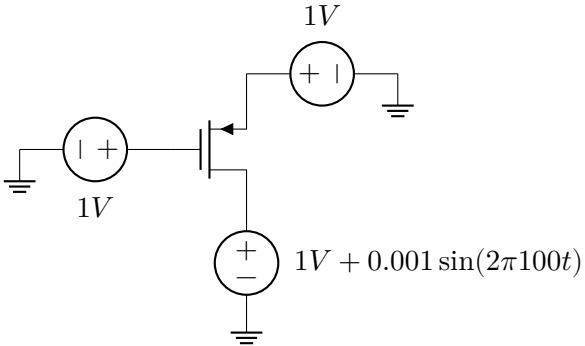

Small-Signal Model for PMOS

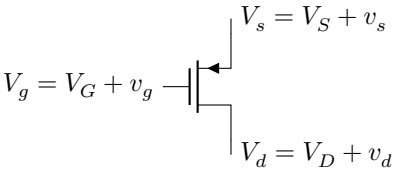

$$\uparrow i_d = g_m \cdot v_{gs} \quad \downarrow i_d = g_{mb} \cdot v_{sb} \quad (25)$$

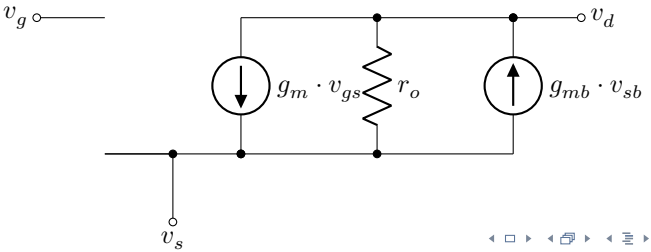

Layout

NMOS

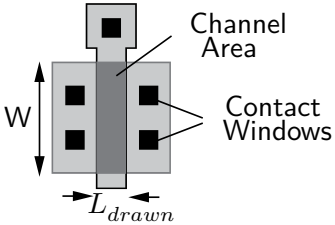

PMOS

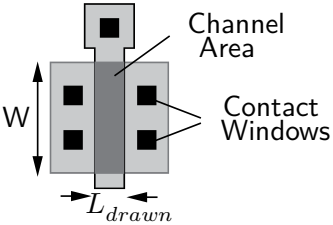

Layout

- W/L is chosen to determine g_m.
- Minimum L is dictated by the process.
- Design rules:
  - Poly-Si extends beyond the channel area by some amount.
  - Enough n^+, p^+ or poly-Si area surrounding each via.
  - Enough distance between two vias.
  - Many others.

NMOS vs PMOS in Performance

- PMOS devices are quite inferior to NMOS in most CMOS technology.
- Lower mobility of holes ($\mu_p C_{ox} \approx 0.5\mu_n C_{ox}$) yield lower current drive and conductance.
- NMOS exhibit higher output resistance, providing more ideal current sources and higher voltage gain.
- It is preferable to use NMOS rather than PMOS wherever possible.

Common-Source

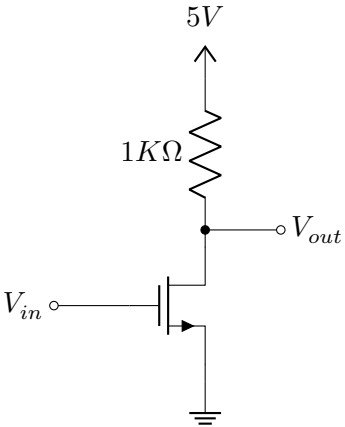

$$V_{in} = 0.8 + 0.001\sin(2\pi 100t) \quad (26)$$

Common-Source

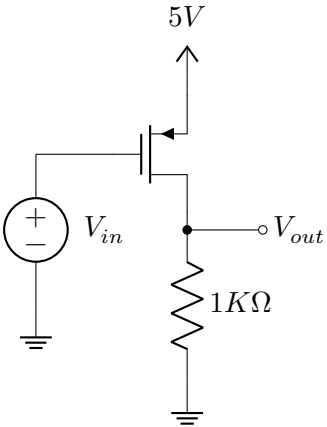

$$V_{in} = 4.1 + 0.001\sin(2\pi 100t) \quad (27)$$

Lecture 12

VE 311 Analog Circuits

Xuyang Lu
2023 Summer

上海交通大學
SHANGHAI JIAO TONG UNIVERSITY

Recap of Last Lecture

- MOSFET Circuits

Topic to be covered

- MOSFET Circuits

Common-Source

$$I_D = \mu_n C_{ox} \frac{W}{L_{eff}} [(V_{GS} - V_{TH})V_{DS} - \frac{1}{2} {V_{DS}}^2] \tag{1}$$

$$I_D = \frac{1}{2} \mu_n C_{ox} \frac{W}{L_{eff}} (V_{GS} - V_{TH})^2 (1 + \lambda V_{DS}) \tag{2}$$

$$g_m = \frac{\partial I_D}{\partial V_{GS}} = \mu_n C_{ox} \frac{W}{L'} (V_{GS} - V_{TH}) = \sqrt{2\mu_n C_{ox} \frac{W}{L'} I_D} = \frac{2I_D}{V_{GS} - V_{TH}} \tag{3}$$

$$r_o = \frac{\partial V_{DS}}{\partial I_D} = 1 \Big/ \frac{\partial I_D}{\partial V_{DS}} \approx \frac{1}{I_D \cdot \lambda} \tag{4}$$

$$V_{TH} = V_{TH0} + \gamma(|\sqrt{2\Phi_F + V_{SB}}| - \sqrt{|2\Phi_F|}) \tag{5}$$

Common-Source

$\lambda \neq 0,\ \gamma \neq 0$

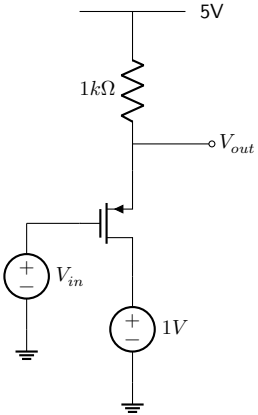

$$V_{in} = 1.8V + 0.001\sin(2\pi \cdot 100t)$$

Common-Source with Resistive Load

Reading: Razavi Chapter 3

DC Analysis

$\lambda = 0$

$\gamma = 0$

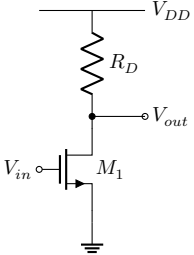

- $V_{in} < V_{TH} \rightarrow M_1$ off

$V_{out} = V_{DD}$

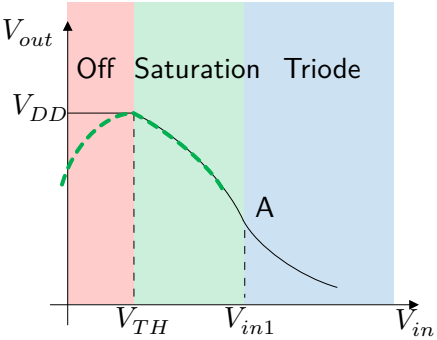

Common-Source with Resistive Load

DC Analysis

$\lambda = 0$

$\gamma = 0$

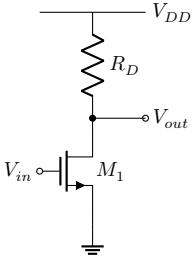

- $V_{in1} > V_{in} > V_{TH} \rightarrow M_1$ in Saturation

$$V_{out} = V_{DD} - R_D \frac{1}{2} \mu_n C_{ox} \frac{W}{L} (V_{in} - V_{TH})^2$$

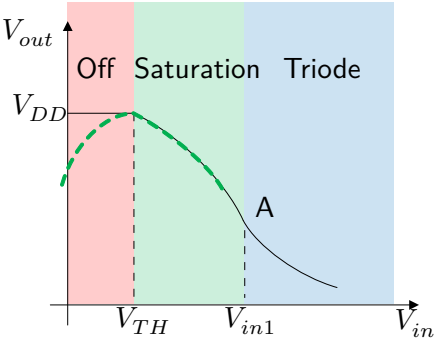

Common-Source with Resistive Load

DC Analysis

$\lambda = 0$

$\gamma = 0$

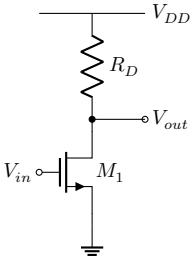

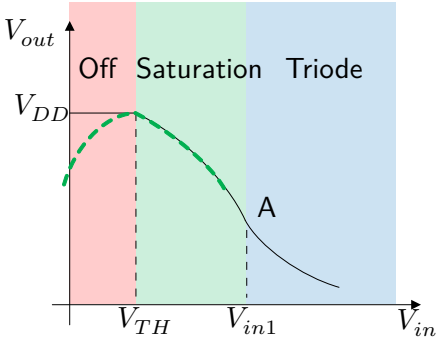

- $V_{in} > V_{in1} \rightarrow M_1$ in Triode

$$V_{out} = V_{DD} - R_D \mu_n C_{ox} \frac{W}{L}((V_{in} - V_{TH})V_{out} - \frac{1}{2}{V_{out}}^2)$$

Common-Source with Resistive Load

DC Analysis

$\lambda = 0$

$\gamma = 0$

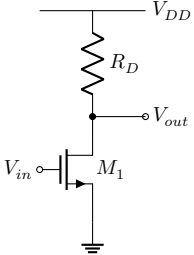

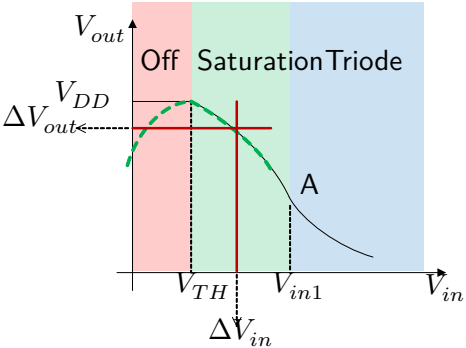

- $A_V = \frac{\partial V_{out}}{\partial V_{in}} = -R_D \mu_n C_{ox} \frac{W}{L} (V_{in} - V_{TH}) = -g_m \cdot R_D$

V_{gs} increases by $\partial V_{in} \rightarrow I_d$ increases by $\partial V_{in} \cdot g_m \rightarrow V_{out}$ decreases by $\partial V_{in} \cdot (g_m \cdot R_D)$

Common-Source with Resistive Load

Small-signal Analysis

$\lambda = 0$

$\gamma = 0$

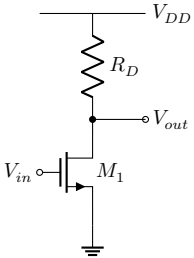

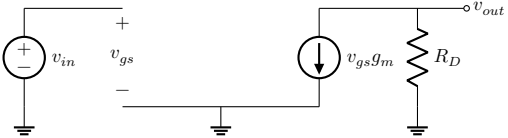

$$A_v = \frac{v_{out}}{v_{in}} = -g_m \cdot R_D \tag{6}$$

- Small-signal analysis leads to the same result as DC analysis.

Common-Source with Resistive Load

DC Analysis

$\lambda \neq 0$
$\gamma \neq 0$

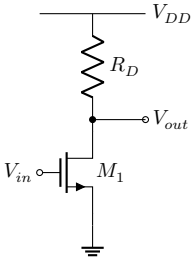

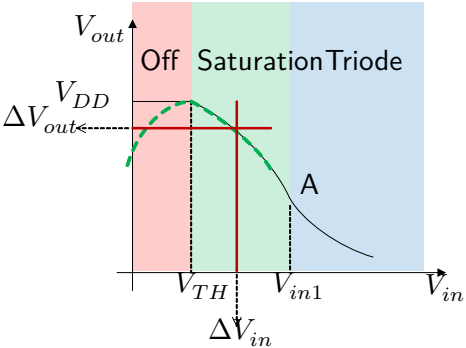

$$A_v = \frac{\partial V_{out}}{\partial V_{in}} = \frac{\partial \left[V_{DD} - R_D \frac{1}{2}\mu_n C_{ox}\frac{W}{L}(V_{in} - V_{TH})^2(1+\lambda V_{out})\right]}{\partial V_{in}} \tag{7}$$

Common-Source with Resistive Load

$$A_v = \frac{\partial V_{out}}{\partial V_{in}} = \frac{\partial \left[V_{DD} - R_D \frac{1}{2}\mu_n C_{ox} \frac{W}{L}(V_{in} - V_{TH})^2(1 + \lambda V_{out})\right]}{\partial V_{in}}$$
$$= -R_D \mu_n C_{ox} \frac{W}{L}(V_{in} - V_{TH})(1 + \lambda V_{out}) - R_D \frac{1}{2}\mu_n C_{ox} \frac{W}{L}(V_{in} - V_{TH})^2 \lambda \frac{\partial V_{out}}{\partial V_{in}} \tag{8}$$

$$A_v = \frac{-g_m R_D}{1 + R_D I_D \lambda} = -g_m \frac{1}{\frac{1}{R_D} + \frac{1}{r_O}} = -g_m (R_D \parallel r_O) \tag{9}$$

Common-Source with Resistive Load

Small-signal Analysis

$\lambda \neq 0$

$\gamma \neq 0$

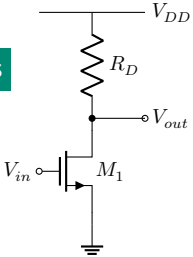

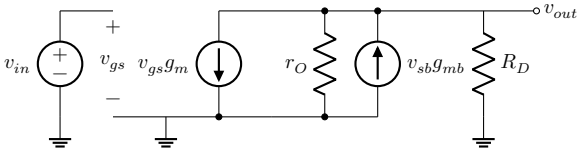

$$A_v = \frac{v_{out}}{v_{in}} = -g_m \cdot (R_D \parallel r_O) \tag{10}$$

- Small-signal analysis leads to the same result as DC analysis.
- g_m is a function of V_{GS} and V_{DS}, while r_O is a function of I_D. $\rightarrow$ **Nonlinearity**

Example

Sketch the drain current and transconductance of M_1 as a function of input voltage. Assume $\lambda = \gamma = 0$.

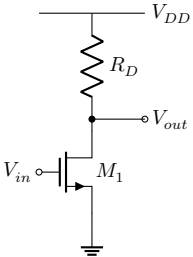

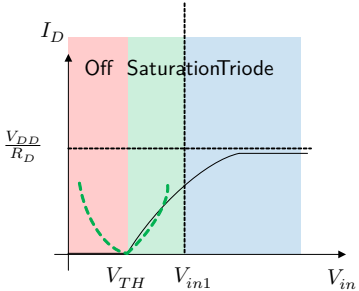

$$I_D = \frac{1}{2}\mu_n C_{ox}\frac{W}{L}\left(V_{in} - V_{TH}\right)^2$$

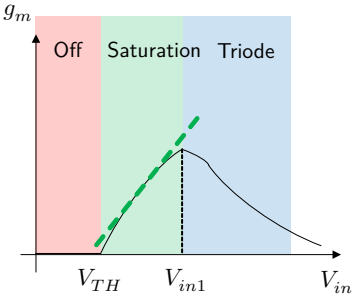

$$g_m = \mu_n C_{ox}\frac{W}{L}\left(V_{in} - V_{TH}\right)$$

Example

Assuming M_1 in saturation, calculate its small-signal gain.

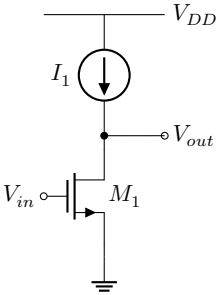

- Small-signal Analysis:

$$A_V = \frac{V_{out}}{V_{in}} = -gm_1 r_{o1} \tag{11}$$

- DC Analysis:

$$I_1 = \frac{1}{2}\mu_n C_{ox}\frac{W}{L}(V_{in} - V_{TH})^2(1 + \lambda V_{DS}) \tag{12}$$

Example

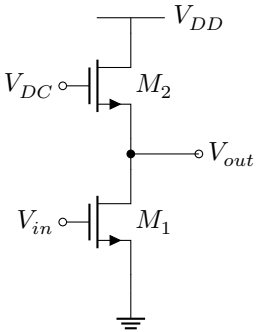

How to choose $V_{in,DC}$?

Example

Diode-Connected Load

DC Analysis

$\lambda = 0$

$\gamma \neq 0$

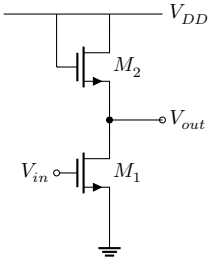

$$V_{out} = V_{in1} - V_{TH1}$$

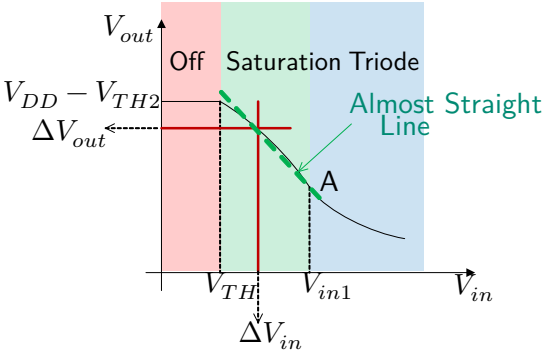

$$\frac{1}{2}\mu_n C_{ox}(\frac{W}{L})_1(V_{in} - V_{TH1})^2 = \frac{1}{2}\mu_n C_{ox}(\frac{W}{L})_2[V_{DD} - (V_{in1} - V_{TH1}) - V_{TH2}]^2 \quad (13)$$

Diode-Connected Load

- $V_{in1} > V_{in} > V_{TH} \rightarrow M_1$ in Saturation

$$\frac{1}{2}\mu_n C_{ox}(\frac{W}{L})_1(V_{in} - V_{TH1})^2 = \frac{1}{2}\mu_n C_{ox}(\frac{W}{L})_2[V_{DD} - V_{out} - V_{TH2}]^2 \tag{14}$$

$$\sqrt{(\frac{W}{L})_1}(V_{in} - V_{TH1}) = \sqrt{(\frac{W}{L})_2}(V_{DD} - V_{out} - V_{TH2}) \tag{15}$$

$$\sqrt{(\frac{W}{L})_1} = \sqrt{(\frac{W}{L})_2}(-\frac{\partial V_{out}}{\partial V_{in}} - \frac{\partial V_{TH2}}{\partial V_{in}}) \tag{16}$$

Diode-Connected Load

DC Analysis $\lambda = 0$, $\gamma \neq 0$

$$\sqrt{(\frac{W}{L})_1} = \sqrt{(\frac{W}{L})_2}(-\frac{\partial V_{out}}{\partial V_{in}} - \boxed{\frac{\partial V_{TH2}}{\partial V_{out}}}\frac{\partial V_{out}}{\partial V_{in}})$$

$$= \eta = \frac{\gamma}{2\sqrt{2\Phi_F} + V_{SB}}$$

$$A_V = \frac{\partial V_{out}}{\partial V_{in}} = -\sqrt{\frac{(W/L)_1}{(W/L)_2}}\frac{1}{1+\eta} \tag{17}$$

- η is a function of V_{SB}
- A_V is almost linear for M_1 in saturation

Diode-Connected Load

Small-signal Analysis

$\lambda = 0$

$\gamma \neq 0$

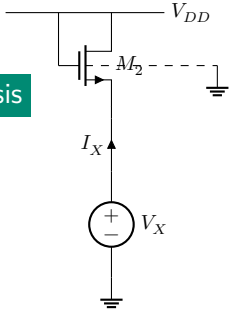

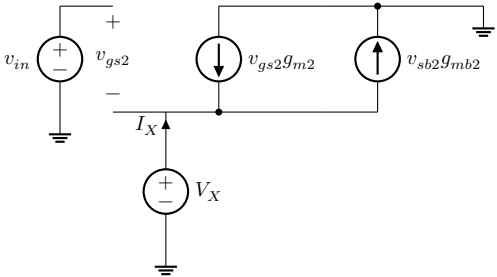

$$R_{in2} = \frac{V_x}{i_x} = \frac{1}{g_{m2} + g_{mb2}} \tag{18}$$

Diode-Connected Load

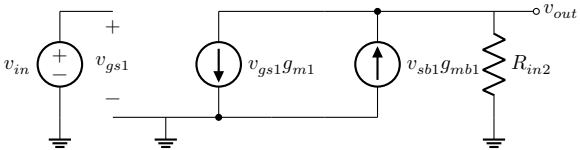

$$A_V = \frac{V_{out}}{V_{in}} = \frac{-g_{m1}}{g_{m2} + g_{mb2}} \tag{19}$$

$$= -\sqrt{\frac{(W/L)_1}{(W/L)_2}}\frac{1}{1+\eta} \tag{20}$$

- Small-signal analysis leads to the same result as DC analysis.

Diode-Connected Load

Small-signal Analysis

$\lambda \neq 0$

$\gamma \neq 0$

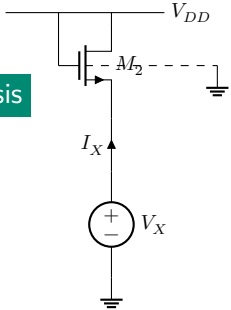

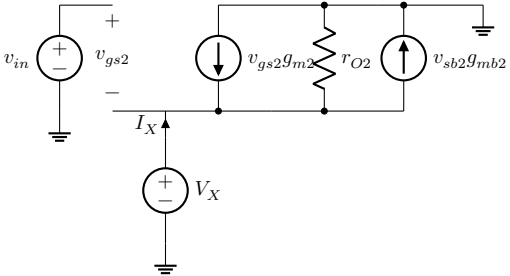

$$R_{in2} = \frac{V_x}{i_x} = \frac{1}{g_{m2}} \parallel \frac{1}{g_{mb2}} \parallel r_{o2} \tag{21}$$

Diode-Connected Load

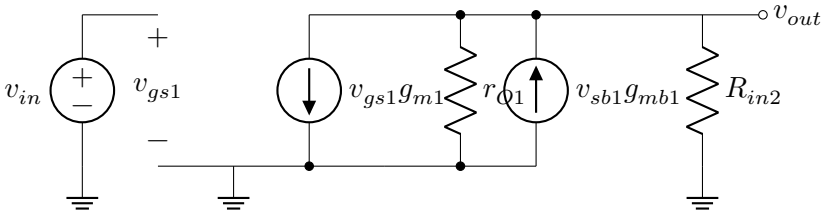

$$A_V = \frac{V_{out}}{V_{in}} = -g_{m1}\left(\frac{1}{g_{m2}} \parallel \frac{1}{g_{mb2}} \parallel r_{o2} \parallel r_{o1}\right) \tag{22}$$

Diode-Connected Load

M_2 has no body effect

Small-signal Analysis

$\lambda \neq 0$
$\gamma \neq 0$

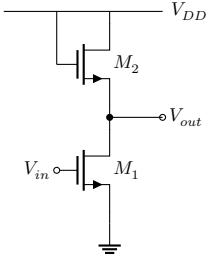

$$
\begin{aligned}
A_V &= \frac{V_{out}}{V_{in}} \\
&= -g_{m1}\left(\frac{1}{g_{m2}} \parallel \boxed{r_{o2} \parallel r_{o1}}\right) \approx -\frac{g_{m1}}{g_{m2}} \\
&= -\sqrt{\frac{\mu_n (W/L)_1}{\mu_p (W/L)_2}} \\
&= -\frac{V_{SG2} - V_{TH2}}{V_{GS1} - V_{TH1}}
\end{aligned}
\tag{23}
$$

$r_o >> 1/gm$

- For $A_V = 10$, $(\frac{W}{L})_1 >> (\frac{W}{L})_2 \rightarrow$ Disproportionally large transistor
- For $A_V = 10$, $(V_{SG2} - V_{TH2}) = 10(V_{GS1} - V_{TH1}) \rightarrow$ Limited output swing

Lecture 13

VE 311 Analog Circuits

Xuyang Lu
2023 Summer

上海交通大學
SHANGHAI JIAO TONG UNIVERSITY

Recap of Last Lecture

- MOSFET Circuits: Diode Connected Load

Topics to Be Covered

- MOSFET Circuits

Schedule

	Apr	May					Jun				Jul				Aug					Sep
Monday	24	1	8	15	22	29	5	12	19	26	3	10	17	24	31	7	14	21	28	4
Tuesday	25	2	9	16	23	30	6	13	20	27	4	11	18	25	1	8	15	22	29	5
Wednesday	26	3	10	17	24	31	7	14	21	28	5	12	19	26	2	9	16	23	30	6
Thursday	27	4	11	18	25*	1*	8*	15*	22	29*	6*	13*	20*	27*	3	10	17	24	31	7
Friday	28	5	12	19	26	2	9	16	23	30	7	14	21	28	4	11	18	25	1	8
Saturday	29	6	13	20	27	3	10	17	24	1	8	15	22	29	5	12	19	26	2	9
Sunday	30	7	14	21	28	4	11	18	25	2	9	16	23	30	6	13	20	27	3	10
JI Week			1	2	3	4	5	6	7	8	9	10	11	12	13					
JI Semester	**Spr.**	**Brk.**	**Summer Term**													**Summer Break**				
SJTU Week	11	12	13	14	15	16	17	18	1	2	3	4								
SJTU Semester	**Spring Term**								**Summer Term**				**Summer Break**							

- Midterm on 30th. It will focus on the fundamentals, semiconductors, Diodes, Op-amps, BJT, MOSFET DC biasing.
- No MOSFET SS analysis, only BJT SS models.

Sign of η

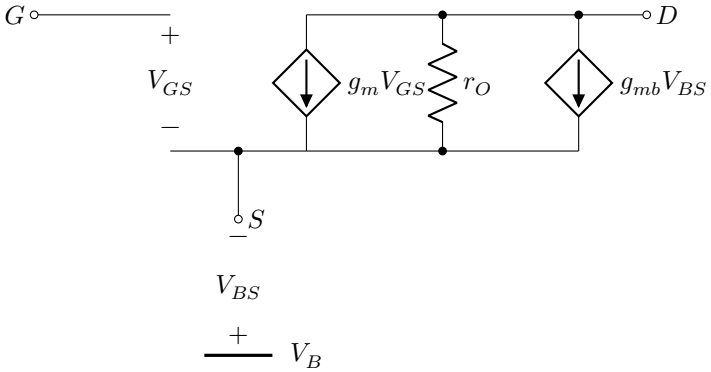

Sign of η

Razavi Textbook, equation 2.50

$$g_{mb} = \frac{\partial I_D}{\partial V_{SB}} = \frac{\partial I_D}{\partial V_{TH}} \cdot \frac{\partial V_{TH}}{\partial V_{SB}} = -\eta g_m \quad (1)$$

$$g_{mb} = \frac{\partial I_D}{\partial V_{SB}} \quad (2)$$

$$= \mu_n C_{ox} \frac{W}{L}(V_{GS} - V_{TH})\left(-\frac{\partial V_{TH}}{\partial V_{BS}}\right) \quad (3)$$

$$\frac{\partial V_{TH}}{\partial V_{BS}} = -\frac{\partial V_{TH}}{\partial V_{SB}} \quad (4)$$

$$= -\frac{\gamma}{2}(2\Phi_F + V_{SB})^{-1/2} \quad (5)$$

$$g_{mb} = g_m \frac{V}{2\sqrt{2\Phi_F + V_{SB}}} \quad (6)$$

$$= \eta g_m \quad (7)$$

Different Load

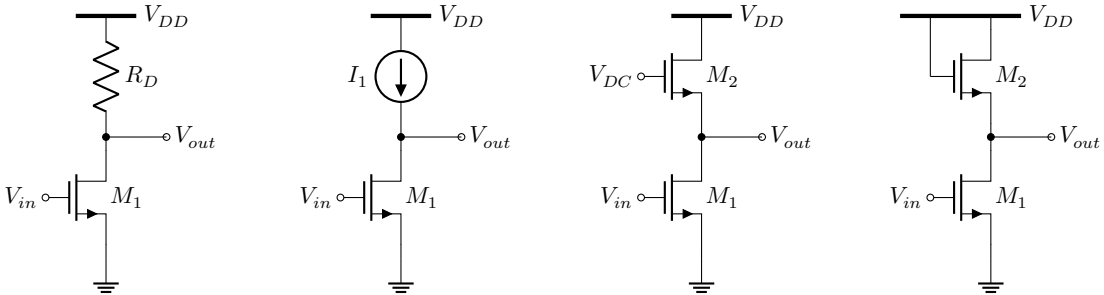

Different Load

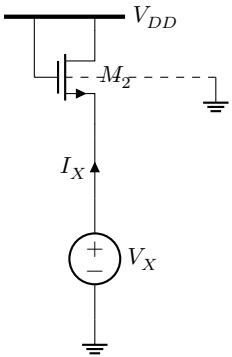

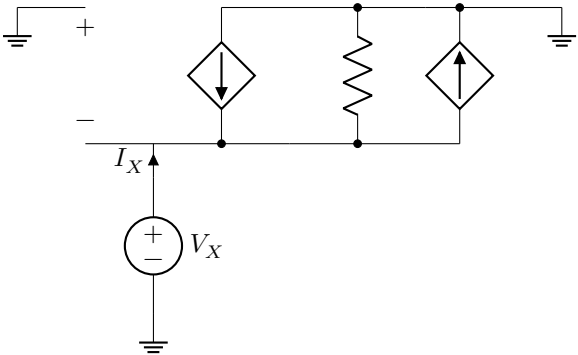

Example

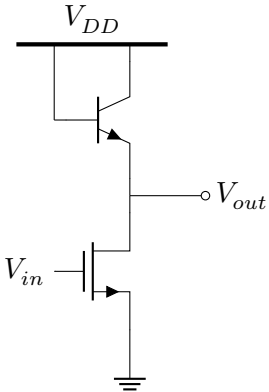

Example

M_1 in saturation and $I_S = 0.75 \times I_1$. How do the disadvantages of CS stage with diode-connected load get improved?

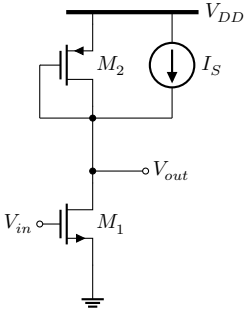

Solution: Small-signal Analysis ($\lambda = 0$):

$$A_v = \frac{V_{out}}{V_{in}} = -\frac{g_{m1}}{g_{m2}} = -\frac{\sqrt{2\mu_n C_{ox}\left(\frac{W}{L}\right)_1 I_{D1}}}{\sqrt{2\mu_p C_{ox}\left(\frac{W}{L}\right)_2 I_{D2}}} \quad (8)$$

$$= -\frac{\sqrt{4\mu_n\left(\frac{W}{L}\right)_1}}{\sqrt{\mu_p\left(\frac{W}{L}\right)_2}} = \frac{4\left(V_{SG2} - \mathrm{V}_{TH2}\right)}{\left(V_{GS1} - V_{TH1}\right)} \quad (9)$$

Example ($\lambda = \gamma = 0$)

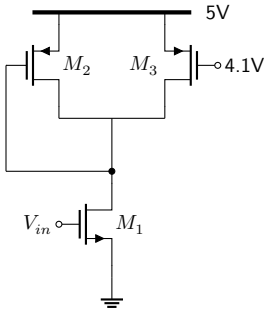

$$W_{drawn}/L_{drawn} = 10u/2u$$
$$V_{in} = 0.8V + 0.001\sin(2\pi 100t)$$

Example ($\lambda = \gamma = 0$)

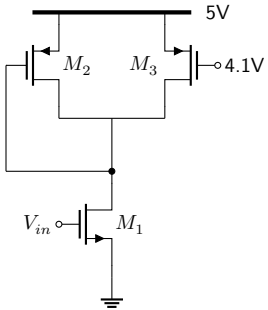

$$W_{drawn}/L_{drawn} = 10u/2u$$
$$V_{in} = 0.8V + 0.001\sin(2\pi 100t)$$

CS with Current-Source Load ($\lambda \neq 0$, $\gamma \neq 0$)

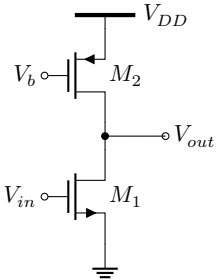

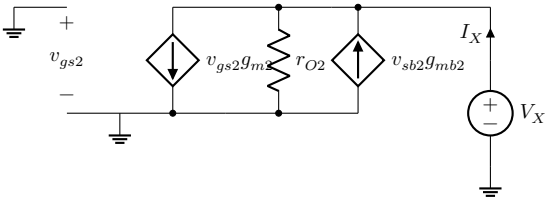

$$v_{sb2} = v_{gs2} = 0 \tag{10}$$

$$R_{in2} = \frac{V_x}{i_x} = r_{o2} \tag{11}$$

CS with Current-Source Load

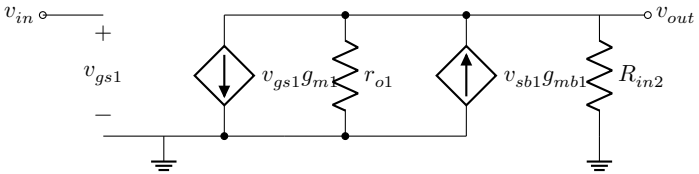

$$A_v = \frac{v_{out}}{v_{in}} \tag{12}$$

$$= -g_{m1}(r_{o2} \parallel r_{o1}) \tag{13}$$

- To achieve high A_v, the output swing is severely limited in the CS stages with resistive load and diode-connected load.
- Here $V_{out,max} = V_{DD} - (V_{SG2} - V_{TH2})$, which can be quite close to V_{DD}

CS with Current-Source Load

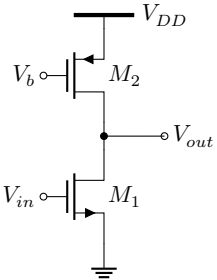

$$A_v = \frac{v_{out}}{v_{in}} \quad (14)$$

$$= -g_{m1}(r_{o2} \parallel r_{o1}) \quad (15)$$

$$r_o \approx \frac{1}{\lambda I_D} \quad (16)$$

$$V_{out,max} = V_{DD} - (V_{SG2} - V_{TH2}) \quad (17)$$

$$V_{out,min} = V_{GS1} - V_{TH1} \quad (18)$$

- For high g_{m1} and small $(V_{GS1} - V_{TH1})$, W of M_1 needs to be large.
- For high r_{o1} and r_{o2}, L of M_1 and M_2 need to be large and L of M_1 and M_2 needs to be increased proportionally. The cost is the large parasitic drain junction capacitance at the output.

Amplifier Equivalent Circuit

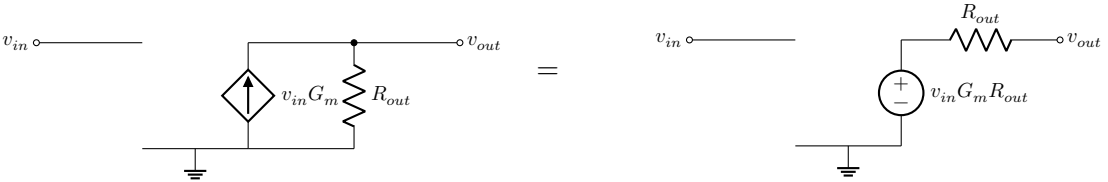

- How to calculate G_m? v_{out} shorted to ground. $G_m = i_{out}/v_{in}$
- How to calculate R_{out}? v_{in} shorted to ground and v_{out} connected to v_{test}. $R_{out} = v_{test}/i_{test}$

CS with Source Degradation

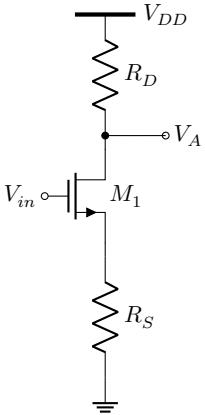

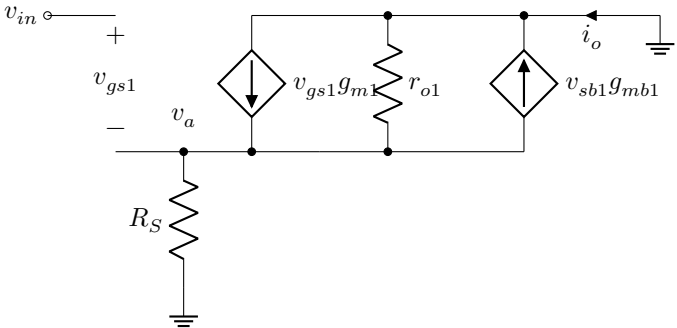

CS with Source Degradation

$$i_O = \frac{-v_a}{R_S} \tag{19}$$

$$(v_{in} - v_a)g_{m1} + i_O = \frac{v_a}{r_{o1}} + v_a g_{mb1} \tag{20}$$

$$G_m = \frac{i_O}{v_{in}} = \frac{-g_{m1}r_{o1}}{R_S + r_{o1} + (g_{m1} + g_{mb1})r_{o1}R_S} \approx -\frac{1}{R_S} \tag{21}$$

If $(g_{m1} + g_{mb1}r_{o1}R_S >> r_{o1}$ and R_S

CS with Source Degradation

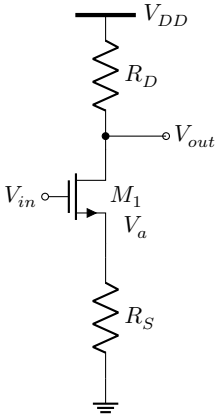

- At low V_{in} (g_m small), turn-on behavior of $R_S \neq 0$ is similar to that of $R_S = 0$.
- $V_{in} = 0V \rightarrow M_1$ off, no current flowing $\rightarrow$ $V_a = 0V$ and $V_{out} = V_{DD}$.

CS with Source Degradation

$R_S = 0$

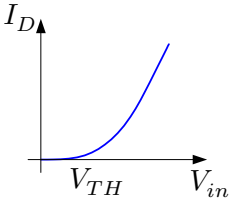

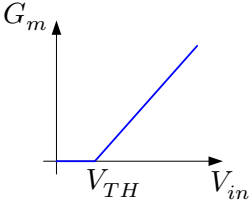

$R_S \neq 0$

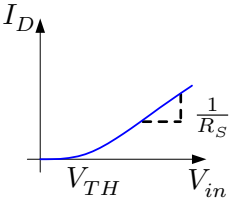

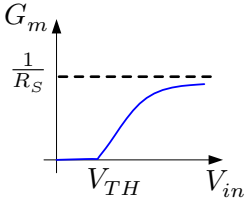

CS with Source Degradation ($\lambda \neq 0, \gamma \neq 0$)

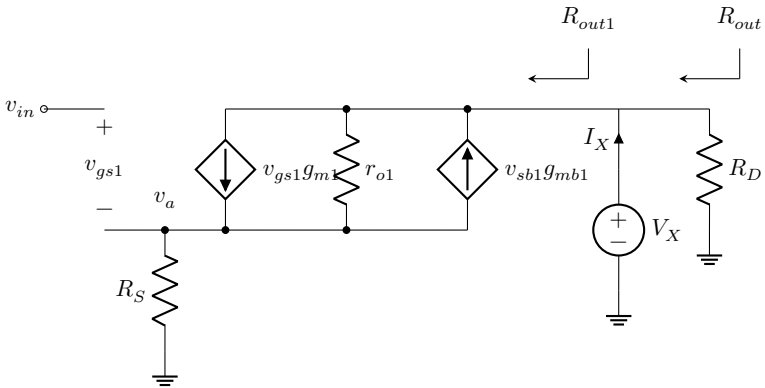

CS with Source Degradation

$$i_o = \frac{-v_a}{R_S} \tag{22}$$

$$v_a g_{m1} + v_a g_{mb1} + \frac{v_a - v_x}{r_o} + i_x = 0 \tag{23}$$

$$R_{out} = R_{out1} \parallel R_D = [R_S + r_{o1} + (g_{m1} + g_{mb1}) r_{o1} R_S] \parallel R_D \approx R_D \tag{24}$$

CS with Source Degradation

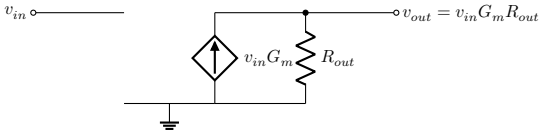

$$A_v = \frac{v_{out}}{v_{in}} = G_m R_{out} \tag{25}$$

$$= \frac{-g_{m1}r_{o1}}{R_S + r_{o1} + (g_{m1} + g_{mb1})r_{o1}R_S} \cdot \frac{[R_S + r_{o1} + (g_{m1} + g_{mb1})r_{o1}R_S]R_D}{[R_S + r_{o1} + (g_{m1} + g_{mb1})r_{o1}R_S] + R_D} \tag{26}$$

$$\approx -\frac{R_D}{R_S} \tag{27}$$

If $(g_{m1} + g_{mb1})r_{o1}$, the intrinsic gain is large.

Lecture 14

VE 311 Analog Circuits

Xuyang Lu
2023 Summer

上海交通大學
SHANGHAI JIAO TONG UNIVERSITY

Recap of Last Lecture

- MOSFET Circuits:
  - Diode Connected Load and its variations
  - Source degeneration

Topic to be covered

- Review for the midterm

Format of the Midterm

- 100 minutes, 4 sections in total.
- 1st section consists of several quick-response questions, each shall take several minutes.
- The following four questions are
  - Diode Circuit
  - MOSFET
  - BJT

Suggestions on the Midterm

Suggestions on the exam:

- During preparation, you shall get very familiar with the basic concepts. Remember most of the stuff or know precisely where to find it in your cheating sheet.
- The suggested amount of time (which also implies the credit) is shown. If you find a question difficult, you can come back and solve it.
- If you find a question not reasonable, state your reason for receiving credit.
- To receive partial credit, you must write something.
- The exam will be curved, show your best effort.

Review of the first-half of our course

How to make an amplifier.

1. What is amplification?
   concepts: DC+AC / Diff+Comm Gain
2. The big picture of amplifiers
   input/output impedance, non-ideal op-amp
3. Component required:
   Linear and non-linear components
   Diode, BJT, MOSFET
   Till this stage, we' ve only investigated Common Emitter/source.
4. To be discussed: Inside an op-amp.
   (Bias, circuit components, Gain boosting, bandwidth and frequency.)

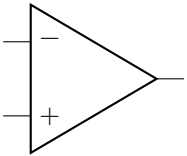

DC + AC Analysis

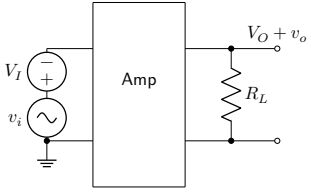

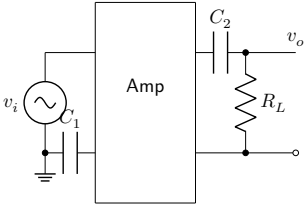

- DC sets the biasing condition.
- AC sets the gain at a specific frequency.

Small-Signal/Large-Signal

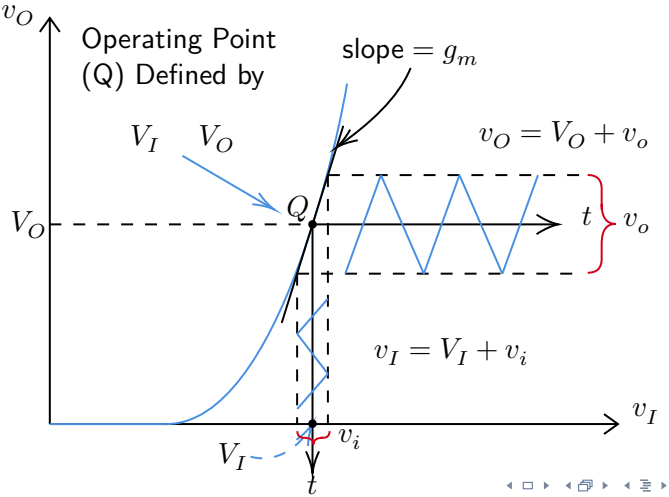

What is Amplification

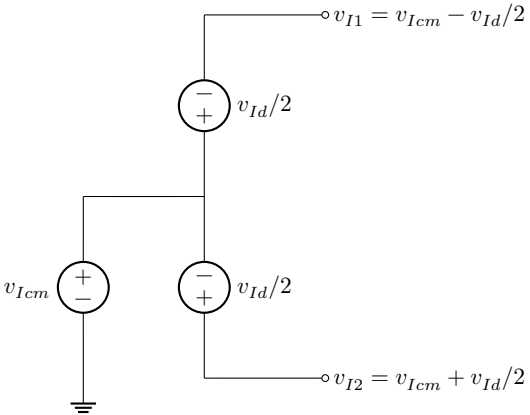

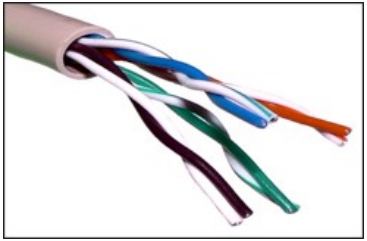

What is Amplification

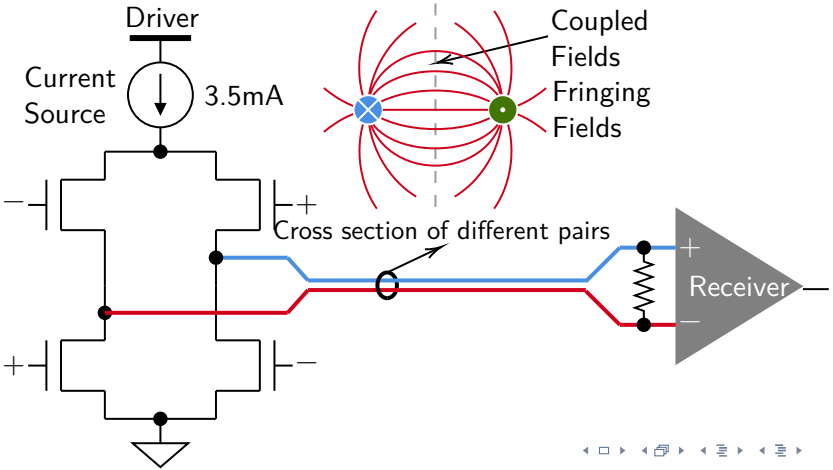

Non-Ideal Opamps

- Gain
- Rout
- Rin
- CMRR
- Offset voltage
- Clipping
- Bandwidth
- Slew rate

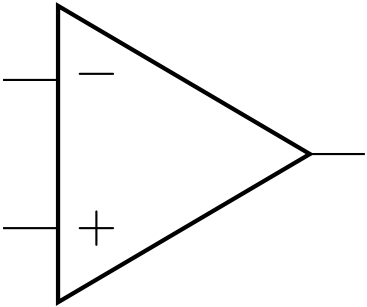

Non-Ideal Opamps

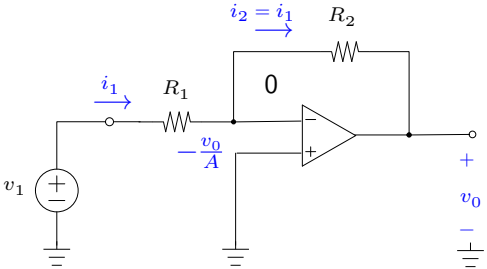

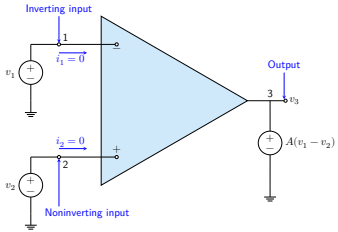

$$v_- - v_+ = -\frac{v_0}{A}$$

$$i_1 = \frac{v_i - (-v_o/A)}{R_1} = \frac{v_i + v_o/A}{R_1}$$

Output Impedance

Make sure you know how to find out output impedance.

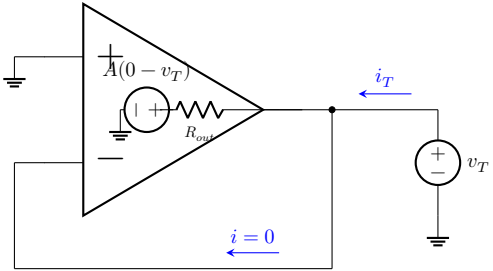

- How to find out the output impedance?
- Apply a test voltage and see what is V_T/i_T

In general, We want large input impedance and small output impedance.

Determining R_o

To find the output resistance, we follow the same procedure as we did for finding the Thevenin equivalent resistance.

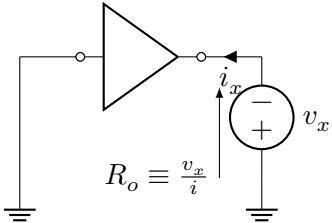

- Short the input terminal, since the input is an independent voltage source
- Apply a test source v_x
- Find i_x
- Find the ratio of $R_o = v_x/i_x$

Difference Amplifier

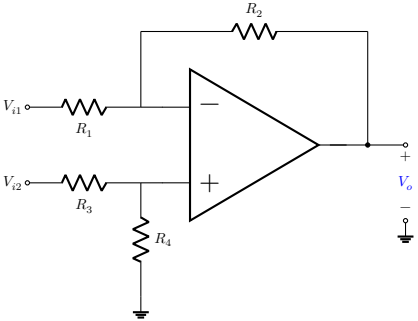

Cons: Input impedance is finite.
Gain is not high.

Difference Amplifier

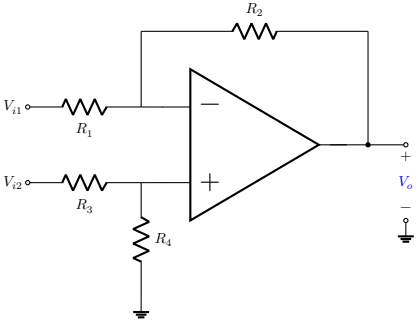

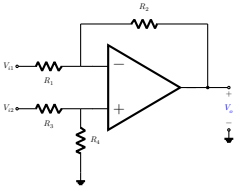

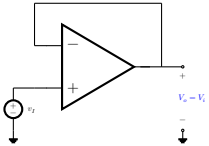

Use a unit gain buffer?

Impedance is fine. Gain is not.

Difference Amplifier

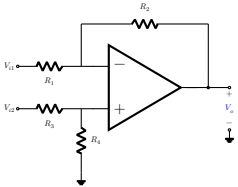

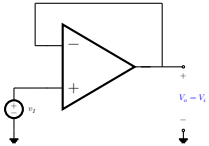

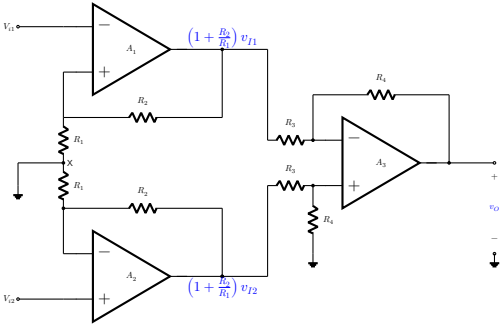

Cons: Possible op-amps saturation

Mismatch between branches

Instrumentation Amplifier

What defines a good amplifier? Common/ differential (CMRR ratio)

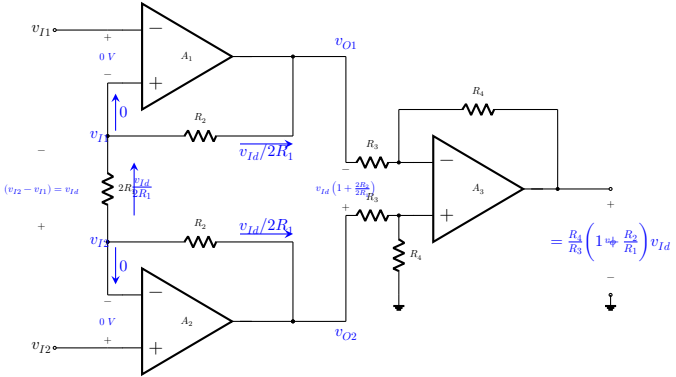

Instrumentation Amplifier

$$A_d \equiv \frac{v_O}{v_{Id}} = \frac{R_4}{R_3}\left(1 + \frac{R_2}{R_1}\right)$$

Common mode first stage gain $= 1$

Thevenin and Norton Model of Amps

Voltage Amp. Transimpedance Transconductance Current Amp.

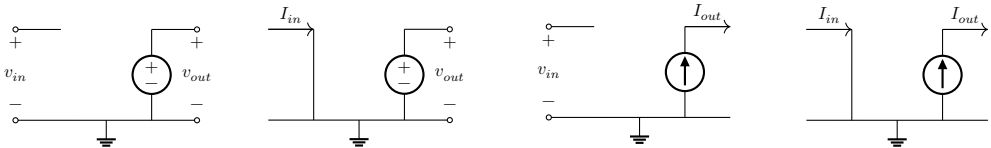

Do we want large or small input/output impedance?

Thevenin and Norton Model of Amps

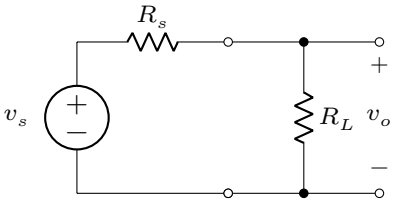

Do we want larger or smaller Rs to get the largest output voltage?

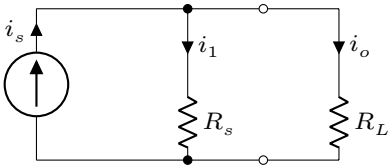

From a current perspective, do we want large or small Rs?

Review of the first-half of our course

How to make an amplifier.

1. What is amplification?
   concepts: DC+AC / Diff+Comm Gain
2. The big picture of amplifiers
   input/output impedance, non-ideal op-amp
3. Component required:
   Linear and non-linear components
   Diode, BJT, MOSFET
   Till this stage, we' ve only investigated Common Emitter/source.
4. To be discussed: Inside an op-amp.
   (Bias, circuit components, Gain boosting, bandwidth and frequency.)

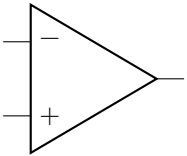

Electrons and Holes

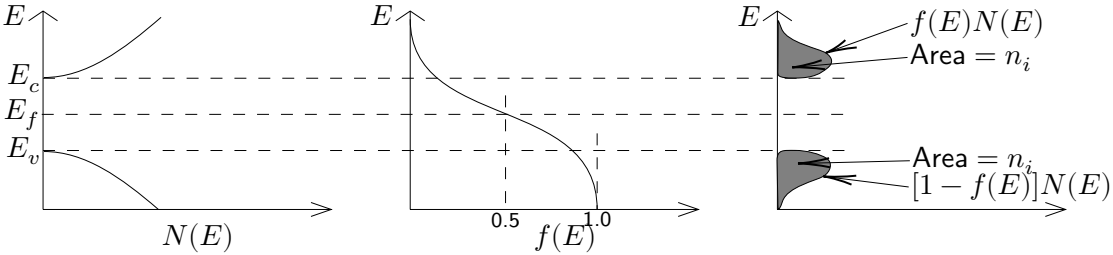

I will not ask you for any calculations on devices this time.

P-Type

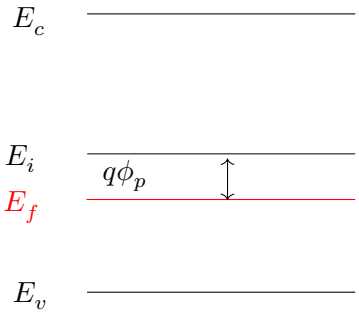

$$np = n_i^2 \tag{1}$$

$$p = N_a = n_i e^{\frac{E_i - E_f}{kT}} = n_i e^{\frac{q\phi_p}{kT}} \tag{2}$$

$$n = \frac{n_i^2}{N_a} = n_i e^{\frac{E_f - E_i}{kT}} = n_i e^{\frac{-q\phi_p}{kT}} \tag{3}$$

- Hu, Chenming. Modern semiconductor devices for integrated circuits.

N-Type

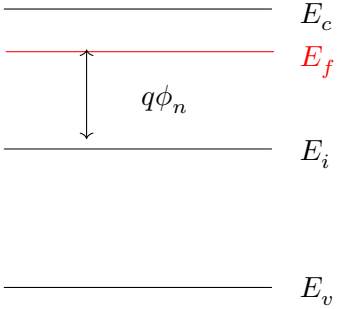

$$np = n_i^2 \tag{4}$$

$$n = N_d = n_i e^{\frac{E_f - E_i}{kT}} = n_i e^{\frac{q\phi_n}{kT}} \tag{5}$$

$$p = \frac{n_i^2}{N_d} = n_i e^{\frac{E_i - E_f}{kT}} = n_i e^{\frac{-q\phi_n}{kT}} \tag{6}$$

Diffusion

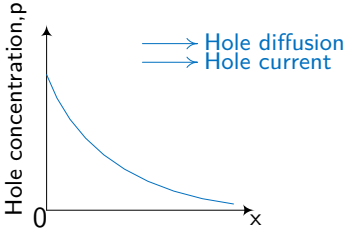

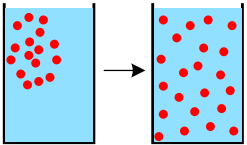

- Magnitude of the current at any point is proportional to the slope of the concentration profile, or the **concentration gradient** , at that point

$$J_{D,n} = qD_n \frac{dn(x)}{dx} \tag{7}$$

Drift Current

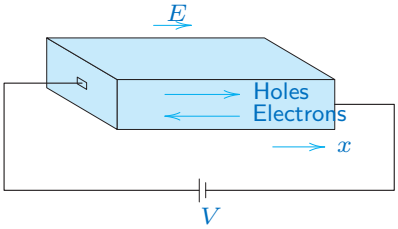

Drift current is independent of the value of the depletion-layer voltage V_0.

- The Junction Built-in Voltage

$$V_0 = V_T \ln\left(\frac{N_A N_D}{n_i^2}\right) \tag{8}$$

Forward Bias (When $V_a > 0$)

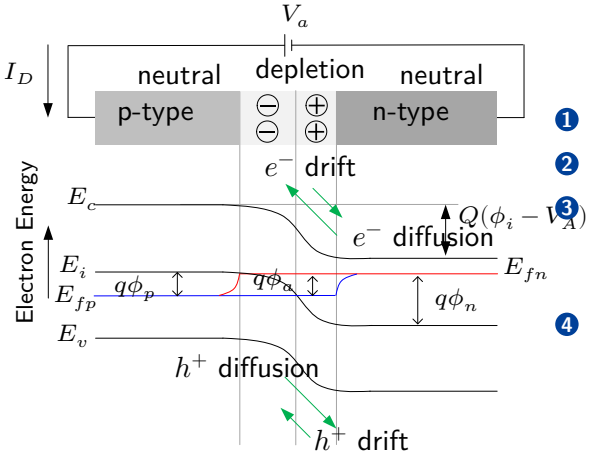

$$I_D = I_S\left(e^{\frac{qV_a}{kT}} - 1\right) > 0 \qquad (9)$$

1. $e^{\frac{qV_a}{kT}}$ is the diffusion current.
2. -1 stands for the drift current.
3. The energy barrier formed by the built-in electric field becomes smaller, $q(\phi_i - V_a)$.
4. Neamen, Donald A. Semiconductor Physics and Devices Basic Principles, chapter 8

Forward Bias (When $V_a > 0$)

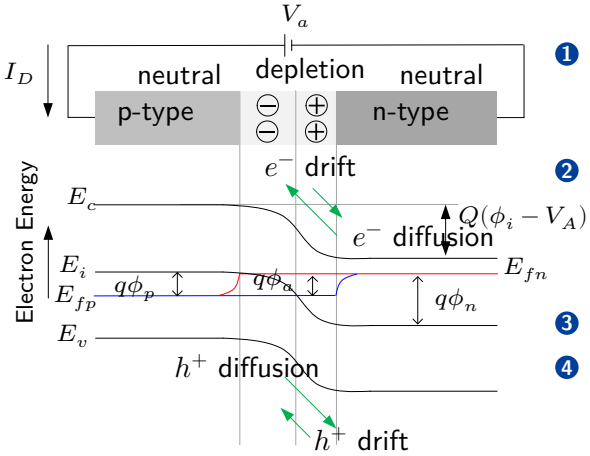

1. More electrons/holes diffuse to the opposite sides. → Diffusion current increases.
2. The drift current is limited by the number of minority carriers on either side of the p-n junction and is unchanged by the increased E-field.
3. There is (+) net current flowing.
4. The depletion width becomes narrower.

Reverse Bias ($V_a < 0$)

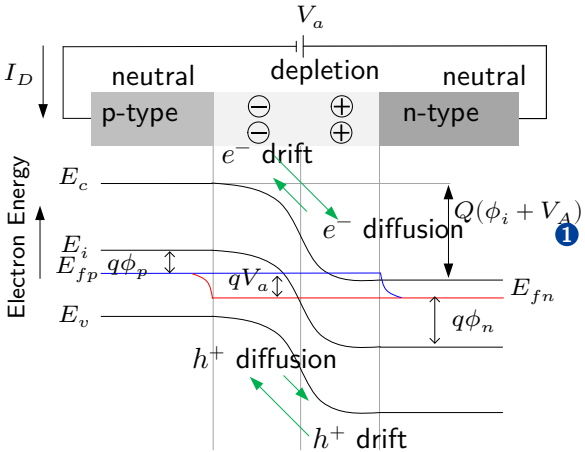

$$I_D = I_S\left(e^{\frac{qV_a}{kT}} - 1\right) < 0 \qquad (10)$$

1. The energy barrier formed by the built-in electric field becomes larger, $q(\phi_i + V_a)$.

Reverse Bias ($V_a < 0$)

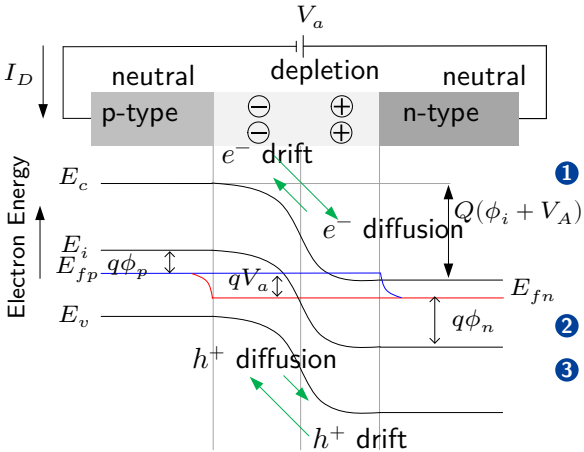

$$I_D = I_S\left(e^{\frac{qV_a}{kT}} - 1\right) < 0 \qquad (11)$$

1. Less electrons/holes diffuse to the opposite sides. → Diffusion current decreases, while drift current remains the same.
2. There is (-) net current flowing.
3. The depletion width becomes wider.

Diode model

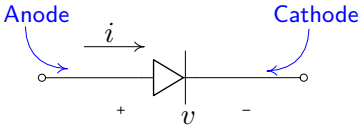

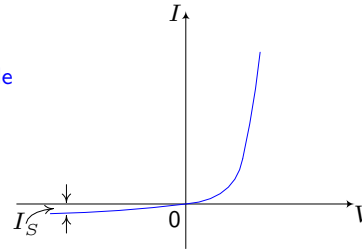

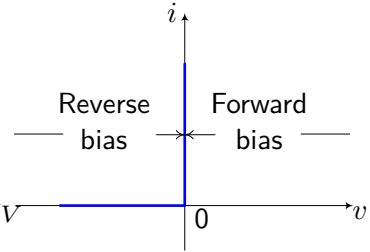

Remember the following equation

- $I = I_S\left(e^{V/V_T} - 1\right)$

Ideal model

Constant voltage model

I will ask you to solve a diode related circuit!

Application of Diodes

- Regulators
- Photodetectors
- Rectifiers

Regulator

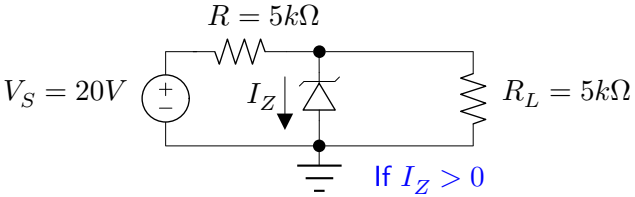

Rectifier

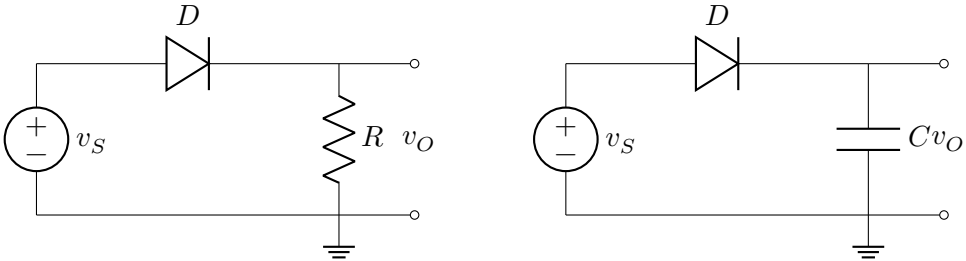

There is not going to be a difficult calculation on a full-wave rectifier. All caps are treated as ideal since we did not cover the frequency domain yet.

Full Wave Rectifier

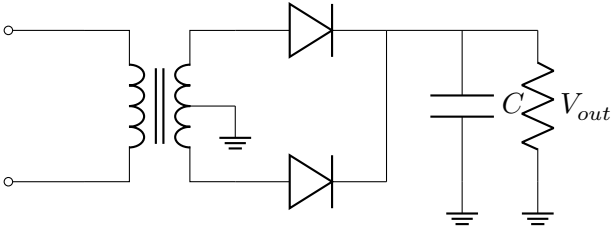

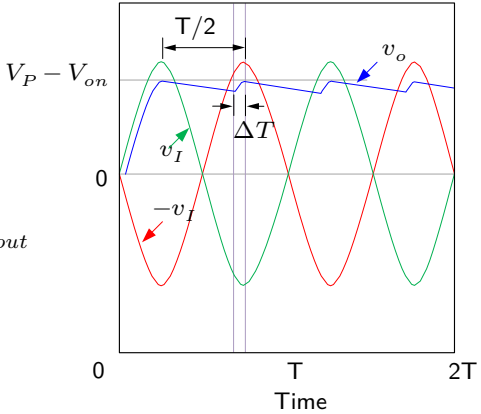

Full Wave Rectifier

$$V_{dc} = V_s - V_{on} \tag{12}$$

$$I_{dc} = \frac{V_{dc}}{R} \tag{13}$$

$$V_r = (V_s - V_{on})\left(1 - e^{-\frac{T/2-\Delta T}{RC}}\right) \tag{14}$$

$$\cong (V_s - V_{on})\left(\frac{T/2 - \Delta T}{RC}\right) \text{ if } \left(\frac{T}{2} - \Delta T\right) \ll RC \tag{15}$$

$$\cong (V_s - V_{on})\left(\frac{T}{2RC}\right) \text{ if } \Delta T \ll \frac{T}{2} \tag{16}$$

Diode-Based Full Wave Rectifier ($V > 2V_D$)

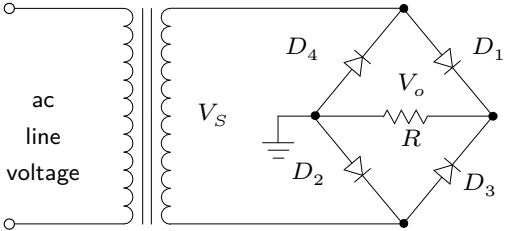

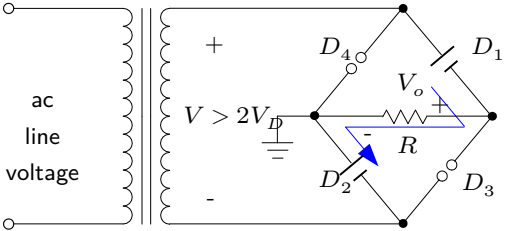

Ripple Voltage Derivation

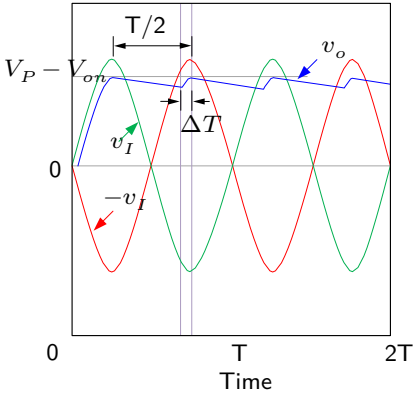

$$V_{dc} = V_s - V_{on} \tag{17}$$

$$I_{dc} = \frac{V_{dc}}{R} \tag{18}$$

$$V_r = (V_s - V_{on})\,(1 - e^{-\frac{T/2-\Delta T}{RC}}) \tag{19}$$

Ripple Voltage Derivation

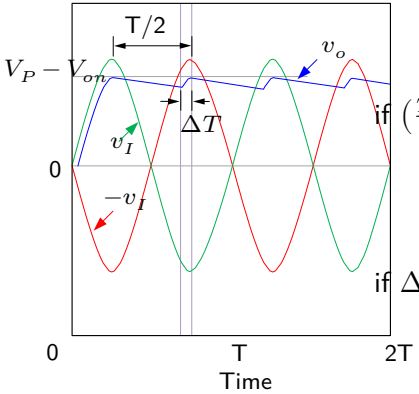

$$V_r = (V_s - V_{on})\left(1 - e^{-\frac{T/2-\Delta T}{RC}}\right) \tag{20}$$

if $\left(\frac{T}{2} - \Delta T\right) \ll RC$

$$\cong (V_s - V_{on})\left(\frac{T/2 - \Delta T}{RC}\right) \tag{21}$$

if $\Delta T \ll \frac{T}{2}$

$$\cong (V_s - V_{on})\left(\frac{T}{2RC}\right) \tag{22}$$

I-V Curve of Solar Cells

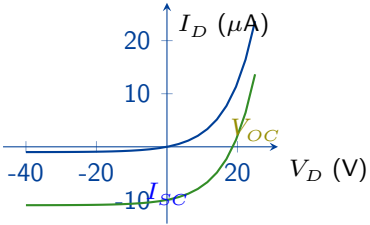

IV of Diodes vs. that of solar Cells

Blue:

$$I = I_S\left(\mathrm{e}^{\frac{\mathrm{qV}}{\mathrm{kT}}-1}\right)$$

Green:

$$I = I_S\left(\mathrm{e}^{\frac{\mathrm{qV}}{\mathrm{kT}}-1}\right) - I_{SC}$$

What are fill factor and power conversion efficiency?

npn BJT Transistors

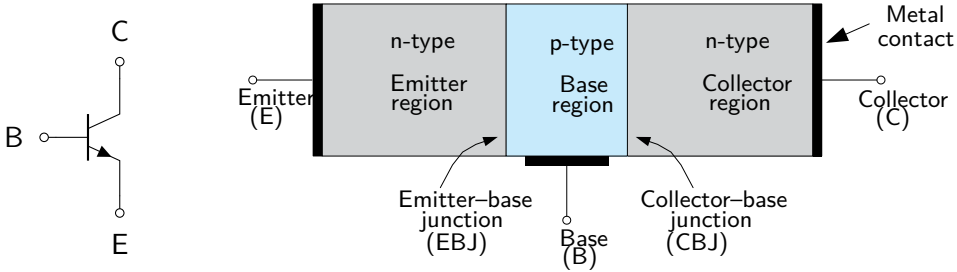

pnp BJT Transistors

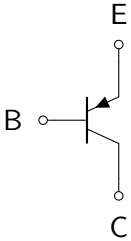

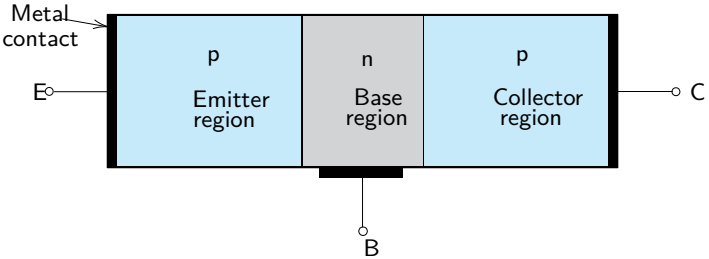

$V_{BE} > 0$ and $V_{CB} = 0$ ($N_{d1} \gg N_a$, W_B very short)

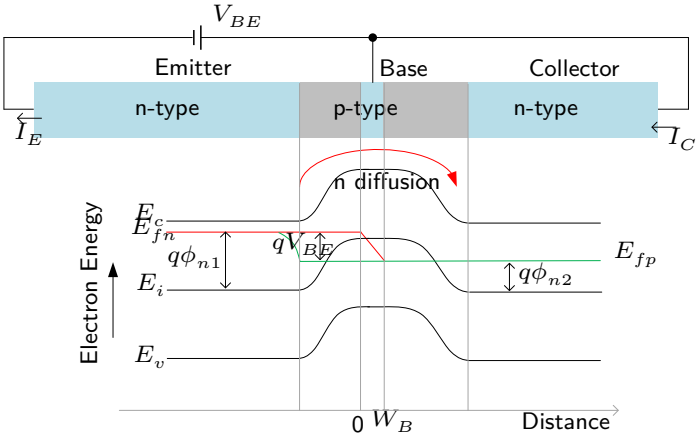

$$I_B \cong 0 \qquad (23)$$

$$I_C \cong I_E \qquad (24)$$

$$I_E = I_C + I_B \qquad (25)$$

$$\frac{I_C}{I_E} = \alpha \qquad (26)$$

$$\frac{I_C}{I_B} = \beta \qquad (27)$$

$V_{BE} > 0$ and $V_{CB} = 0$ ($N_{d1} \gg N_a$, W_B very short)

- The n (electron) diffusion is much larger than the p (hole) diffusion at the Base-Emitter junction.
- Nearly all the n (electron) diffusion from the Base-Emitter junction pass through the Base, enter into the depletion region of the Base-Collector junction, and are swept to the Collector side by the built-in electric field.

NPN & PNP BJT Transistors

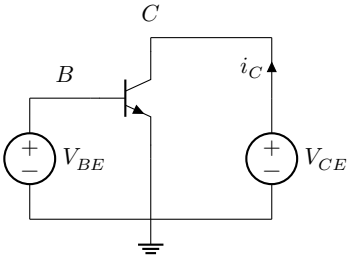

$$V_{CE} \geq V_{BE} \tag{28}$$

$$I_C = I_S \left(e^{\frac{qV}{BT}} - 1 \right) \tag{29}$$

$$\alpha = \frac{I_C}{I_E} \cong 1 \tag{30}$$

$$\beta = \frac{I_C}{I_B} = \frac{\alpha}{1-\alpha} \tag{31}$$

I_s is a constant in the spice model

Hybrid-π Model

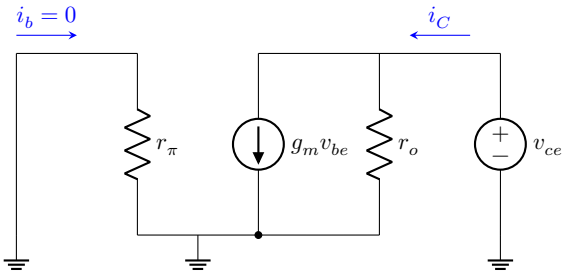

$$I_C = I_S\left(e^{\frac{qV_{BE}}{kT}} - 1\right)\left(1 + \frac{V_{CE}}{V_A}\right) \tag{32}$$

$$r_\pi = \frac{dV_{BE}}{dI_B} = \frac{1}{\frac{dI_C}{\beta dV_{BE}}} \tag{33}$$

$$= \frac{1}{\frac{g_m}{\beta}} = \frac{\beta}{g_m} \tag{34}$$

$$g_m = \frac{dI_C}{dV_{BE}} \simeq \frac{I_C}{kT/q} \tag{35}$$

$$r_o = \frac{1}{\frac{dI_C}{dV_{CE}}} \simeq \frac{V_A}{I_C} \tag{36}$$

Impedance Looking into Emitter

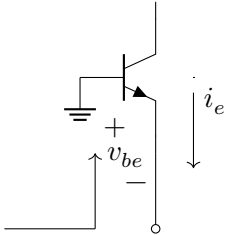

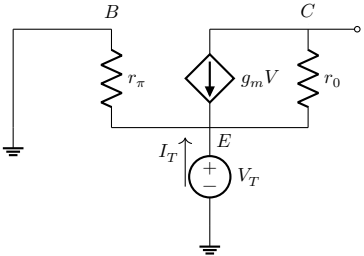

$$r_e = \frac{r_\pi}{(\beta+1)} \tag{37}$$

$$= \frac{1}{(\beta+1)}\frac{\beta}{g_m} = \frac{\alpha}{g_m} \cong \frac{1}{g_m} \tag{38}$$

Common Emitter With Degeneration

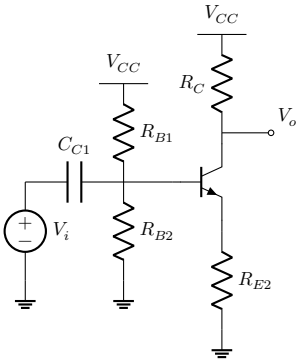

$$\frac{v_o}{v_i} \approx \frac{-g_m R_C}{1 + g_m R_E} \tag{39}$$

the gain has reduced by $1 + g_m R_E$

- If $g_m R_E \gg 1$ then the gain is:

$$\frac{v_o}{v_i} \approx \frac{-R_C}{R_E} \tag{40}$$

- This means the gain is independent of the BJT transistor

Lecture 15: MOSFET Review

VE311 Electronic Circuits

Xuyang Lu
2023 Summer

上海交通大學
SHANGHAI JIAO TONG UNIVERSITY

Recap of Last Lecture

- Review for the midterm

Topics to Be Covered

- Review for the midterm (MOSFET part)
- Source Follower

NMOS FET

Reading: Razavi Chapter 2.

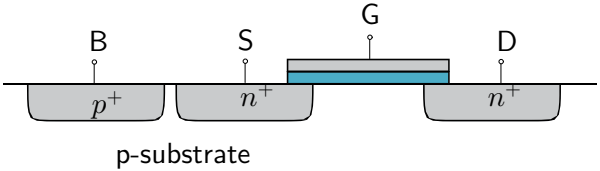

NMOS I-V Characteristics (Triode)

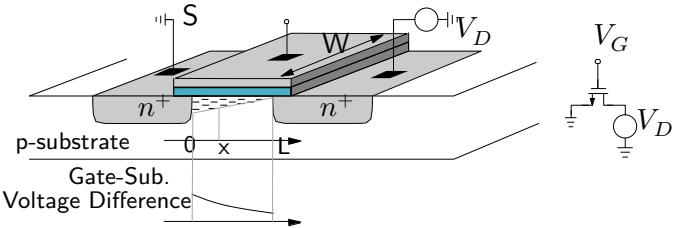

$$I_D = \mu_n C_{ox} \frac{W}{L_{eff}} \left[(V_{GS} - V_{TH}) V_{DS} - \frac{1}{2} V_{DS}^2 \right] \tag{1}$$

Saturation Region

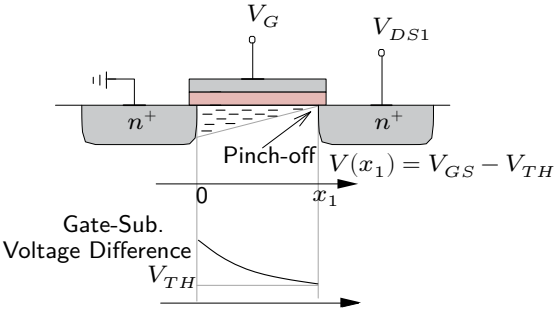

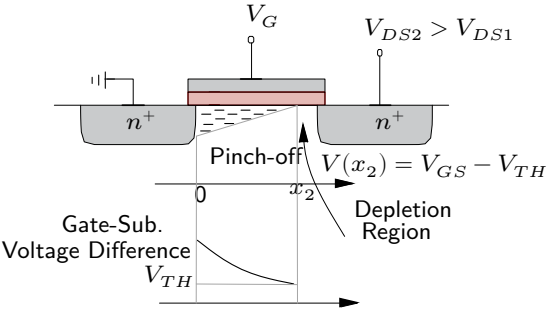

Saturation Region

$$I_D = \frac{1}{2}\mu_n C_{ox}\frac{W}{L'}\left(V_{GS} - V_{TH}\right)^2 \quad (2)$$

- I_D: constant along channel
- L': the point at which Q_d drops to zero
- V_{GS}–V_{TH}: the overdrive voltage

- Electron velocity ($v = I_D/Q_d$) becomes tremendously high at the pinch off point ($Q_d \to 0$), such that electrons shoot through the depletion region and arrive at the drain terminal.

Channel-Length Modulation

$$r_o = \frac{\partial V_{DS}}{\partial I_D} = 1/\frac{\partial I_D}{\partial V_{DS}} \tag{3}$$

$$= \frac{1}{\frac{1}{2}\mu_n C_{ox}\frac{W}{L}\left(V_{GS} - V_{TH}\right)^2 \cdot \lambda} \tag{4}$$

$$\approx \frac{1}{I_D \cdot \lambda} \tag{5}$$

Body Effect

$$V_{TH} = V_{TH0} + \gamma(\sqrt{|2\Phi_F + V_{SB}|} - \sqrt{|2\Phi_F|}) \tag{6}$$

$$\Phi_F = \frac{kT}{q} \ln \frac{N_{sub}}{n_i} \tag{7}$$

$$\gamma = \frac{\sqrt{2q\epsilon_{Si}N_{sub}}}{C_{ox}} \tag{8}$$

$$I_D = \frac{1}{2}\mu_n C_{ox} \frac{W}{L'} (V_{GS} - V_{TH})^2 \tag{9}$$

I will ask you how the body shall be connected.

NMOS Formula Table

NMOS Transistor Mathematical Model Summary

The following equations represent the complete model for the $i - v$ behavior of the NMOS transistor.

For all regions,

$$K_n = K_n' \frac{W}{L} \quad K_n' = \mu_n C_{ox}'' \quad i_G = 0 \quad i_B = 0 \tag{10}$$

Cut off region,

$$i_D = 0 \quad \text{for } v_{GS} \leq V_{TN} \tag{11}$$

Triode region,

$$i_D = K_n \left(v_{GS} - V_{TN} - \frac{v_{DS}}{2} \right) v_{DS} \quad \text{for } v_{GS} - V_{TN} \geq v_{DS} \geq 0 \tag{12}$$

NMOS Formula Table

Saturation region,

$$i_D = \frac{K_n}{2}\left(v_{GS} - V_{TN}\right)^2 \left(1 + \lambda v_{DS}\right) \quad \text{for } v_{DS} \geq \left(v_{GS} - V_{TN}\right) \geq 0 \tag{13}$$

Threshold voltage,

$$V_{TN} = V_{TO} + \gamma\left(\sqrt{v_{SB} + 2\phi_F} - \sqrt{2\phi_F}\right) \tag{14}$$

$V_{TN} > 0$ for enhancement-mode NMOS transistors.Depletion-mode NMOS devices can also be fabricated,and $I_{TN} \leq 0$ for these transistors.

PMOS Formula Table

NMOS Transistor Mathematical Model Summary

The following equations represent the complete model for the $i - v$ behavior of the NMOS transistor.

For all regions,

$$K_p = K_p' \frac{W}{L} \quad K_p' = \mu_p C_{ox}'' \quad i_G = 0 \quad i_B = 0 \tag{15}$$

Cut off region,

$$i_D = 0 \quad \text{for } V_{GS} \geq V_{TP} \tag{16}$$

Triode region,

$$i_D = K_p \left(v_{GS} - V_{TP} - \frac{v_{DS}}{2} \right) v_{DS} \quad \text{for } 0 \leq |v_{DS}| \leq |v_{GS} - V_{TP}| \tag{17}$$

PMOS Formula Table

Saturation region,

$$i_D = \frac{K_p}{2}\left(v_{GS} - V_{TP}\right)^2 \left(1 + \lambda |v_{DS}|\right) \quad \text{for } |v_{DS}| \geq |v_{GS} - V_{TP}| \geq 0 \tag{18}$$

Threshold voltage,

$$V_{TN} = V_{TO} + \gamma\left(\sqrt{v_{SB} + 2\phi_F} - \sqrt{2\phi_F}\right) \tag{19}$$

For the enhancement-mode PMOS transistor,$V_{TP} < 0$.Depletion-mode PMOS devices can also be fabricated;$I_{TP} \geq 0$ for these devices.

Small Signal Model

$$g_m = \mu_n C_{ox} \frac{W}{L} (V_{GS} - V_{TH}) (1 + \lambda V_{DS}) \quad (20)$$

$$r_o = \frac{\partial V_{DS}}{\partial I_D} = 1 / \frac{\partial I_D}{\partial V_{DS}} \approx \frac{1}{I_D \cdot \lambda} \quad (21)$$

SS of NMOS = SS of PMOS

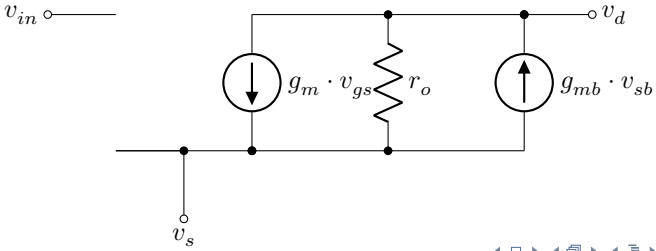

Common-Source

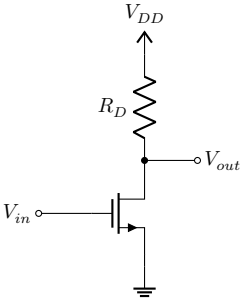

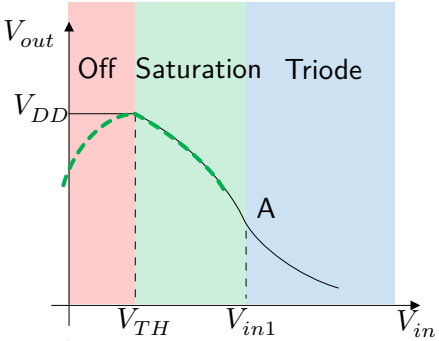

I will ask you how to determine the DC operation region.

For example, What is the value of V_{in1}

Common-Source and its Derivations

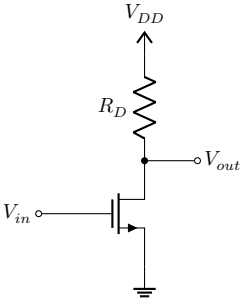

- Gain, bias, and small-signal model
- Input and output impedance
- Advantages:
  - Large input impedance
  - Large gain
  - Widely used
  - No current through Gate, easily biased.

Of course, there is going to be a question related to a common source amplifier and its derivations.

Common-Source and its Derivations

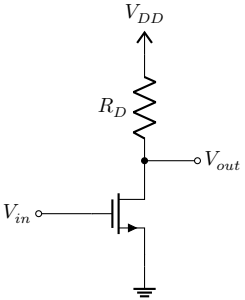

- Cons:
  - R_D and M_1 process variation
  - (Operating condition?) Swing limited by R_D
  - Output DC voltage cannot be chosen arbitrarily
  - Output impedance and gain tradeoff

Of course, there is going to be a question related to a common source amplifier and its derivations.

Common-Source and its Derivations

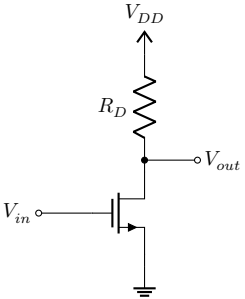

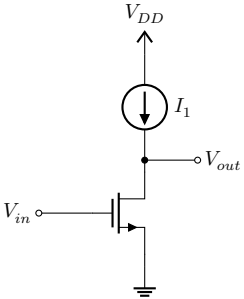

- Current Source, provide high impedance
- Problem: there is no ideal current source in the world.

Common-Source and its Derivations

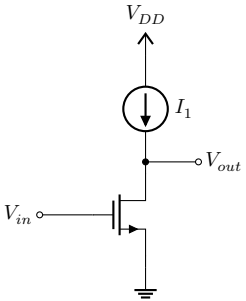

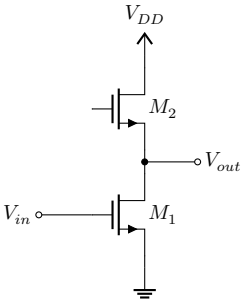

- DC biased NMOS Load: Good approximation of current source.
- Pros: Less process variation.
- Cons: Additional Bias to be generated, Body effect and therefore Linearity problem.

Common-Source and its Derivations

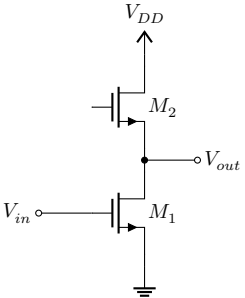

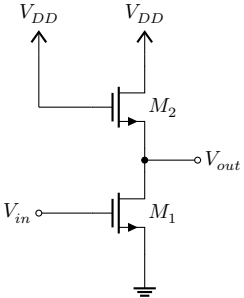

- No need to generate an additional voltage. M_2 is always in saturation.
- Still, output impedance and linearity

Common-Source and its Derivations

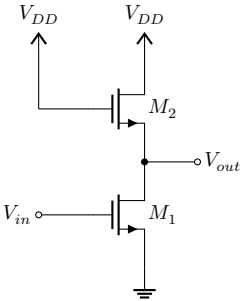

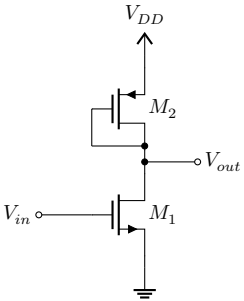

- PMOS to improve linearity
- No more body effect.
- Cons: Now how is the DC defined? Limited output swing.
- Large input capacitance.

Common-Source and its Derivations

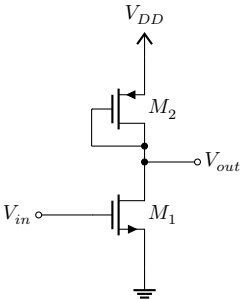

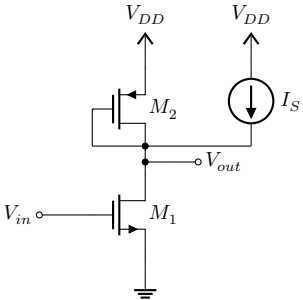

- Additional Current path
- Pros: Improve voltage swing, reduce input cap size.

Common-Source and its Derivations

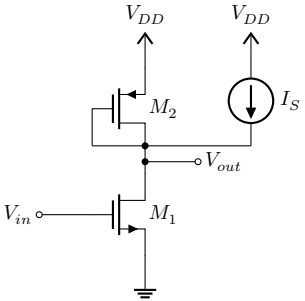

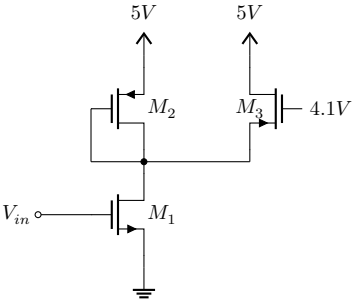

Common-Source and its Derivations

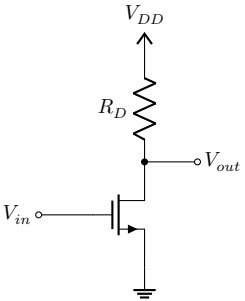

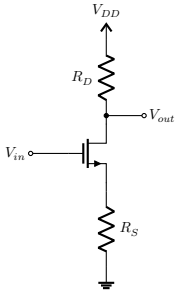

- Pros: Linearity
- Cons: Gain

$$Gain = G_m \cdot R_{out} \tag{22}$$

CS with Source Degradation

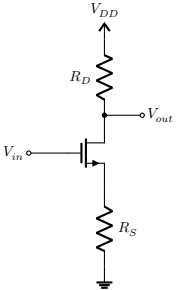

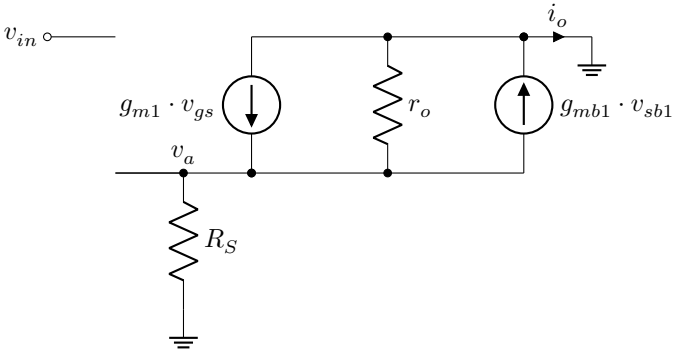

CS with Source Degradation

$$i_o = \frac{-v_a}{R_S} \tag{23}$$

$$(v_{in} - v_a)\, gm_1 + i_o = \frac{v_a}{r_{o1}} + v_a gmb_1 \tag{24}$$

$$G_m = \frac{i_o}{v_{in}} = \frac{-gm_1 r_{o1}}{R_S + r_{o1} + (g_{m1} + g_{mb1})\, r_{o1} R_S} \approx -\frac{1}{R_S} \tag{25}$$

If,

$$(gm_1 + gmb_1)\, r_{01} R_S \gg r_{01} \text{ and } R_S \tag{26}$$

CS with Source Degradation

$$\lambda \neq 0, \gamma \neq 0 \tag{27}$$

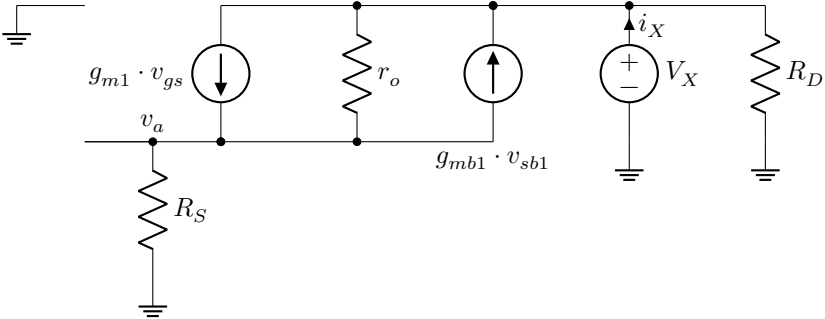

CS with Source Degradation

$$i_x = \frac{v_a}{R_S} \tag{28}$$

$$v_a gm_1 + v_a gmb_1 + \frac{v_a - v_x}{r_o} + i_x = 0 \tag{29}$$

$$R_{\text{out}} = R_{\text{out1 1}} \parallel R_D = \left[R_S + r_{o1} + \left(gm_1 + gmb_1\right) r_{o1} R_S\right] \parallel R_D \approx R_D \tag{30}$$

CS with Source Degradation

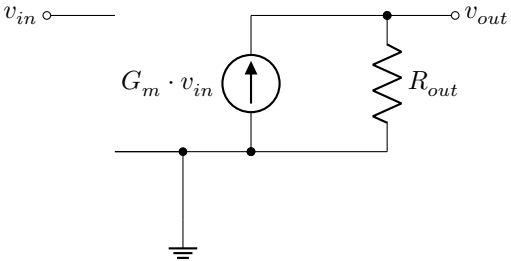

CS with Source Degradation

$$A_v = \frac{v_{\text{out}}}{v_{\text{in}}} = G_m R_{\text{out}} \tag{31}$$

$$= \frac{-gm_1 r_{o1}}{R_S + r_{o1} + (gm_1 + gmb_1)\, r_{o1} R_S} \cdot \frac{[R_S + r_{o1} + (gm_1 + gmb_1)\, r_{o1} R_S]\, R_D}{[R_S + r_{o1} + (gm_1 + gmb_1)\, r_{o1} R_S] + R_D} \tag{32}$$

$$\approx -\frac{R_D}{R_S} \quad \text{If } (gm_1 + gmb_1)\, r_{01}\text{, the intrinsic gain, is large.} \tag{33}$$

Example

Assuming $\lambda = \gamma = 0$, calculate the small signal voltage gain of the circuit below.

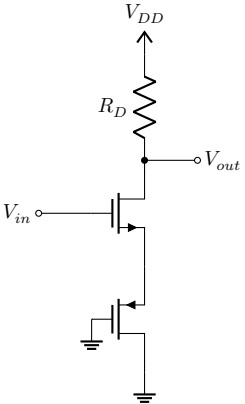

$$G_m = -\frac{1}{\frac{1}{gm_1} + \frac{1}{gm_2}} \tag{34}$$

$$R_{\text{out}} = R_D \tag{35}$$

$$A_v = G_m R_{out} \tag{36}$$

Example

Calculate the small signal voltage gain of the circuit below.

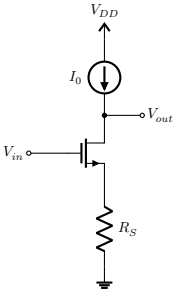

$$G_m = \frac{-gm_1 r_{01}}{r_{01} + R_S + (gm_1 + gmb_1)\, r_{01} R_S} \tag{37}$$

$$R_{out} = r_{o1} + R_S + (gm_1 + gmb_1)\, r_{o1} R_S \tag{38}$$

$$A_v = G_m R_{out} = -gm_1 r_{o1} \tag{39}$$

- I_0 is ideal current source $\rightarrow$ Voltage across R_S is constant $\rightarrow$ M_1 source shorted to ground
- R_D replaced by current source $\rightarrow$ Nonlinearity issue arises again

Ideal Amplifier

- For driving a low impedance load, source follower, as a buffer, provides no gain but large input impedance and low output impedance.

Source Follower

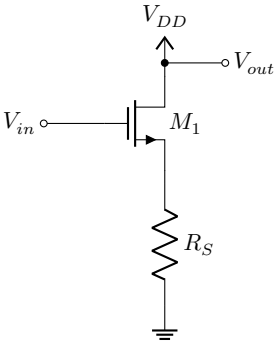

$$V_{DD} - V_{\text{out}} = V_{\text{in1}} - V_{\text{out}} - V_{TH} \quad (40)$$

$$\rightarrow V_{in1} = V_{DD} + V_{TH} \quad (41)$$

Source Follower

$$\mathbf{V}_{\text{in}} < \mathbf{V}_{TH} \rightarrow M_1 \text{ Off} \tag{42}$$

$$V_{out} = 0 \tag{43}$$

$$V_{\text{in } 1} > V_{\text{in}} > V_{TH} \rightarrow M_1 \text{ in Saturation} \tag{44}$$

$$R_S \frac{1}{2} \mu_n C_{ox} \frac{W}{L} \left(V_{in} - V_{out} - V_{TH}\right)^2 = V_{out} \tag{45}$$

$$V_{\text{in}} > V_{\text{in } 1} \rightarrow M_1 \text{ in Triode} \tag{46}$$

$$R_S \mu_n C_{\text{ox}} \frac{W}{L} \left[\left(V_{\text{in}} - V_{\text{out}} - V_{TH}\right) \left(V_{DD} - V_{\text{out}}\right) - \frac{1}{2} \left(V_{DD} - V_{\text{out}} \right)^2 \right] = V_{\text{out}} \tag{47}$$

Source Follower

$$V_{\text{in1}} > V_{\text{in}} > V_{TH} \rightarrow M_1 \text{ in Saturation} \tag{48}$$

$$R_S \frac{1}{2}\mu_n C_{ox}\frac{W}{L}\left(V_{\text{in}} - V_{\text{out}} - V_{TH}\right)^2 = V_{\text{out}} \tag{49}$$

$$R_S \frac{1}{2}\mu_n C_{ox}\frac{W}{L} 2\left(V_{in} - V_{out} - V_{TH}\right)\left(1 - \frac{\partial V_{out}}{\partial V_{in}} - \frac{\partial V_{TH}}{\partial V_{in}}\right) = \frac{\partial V_{out}}{\partial V_{in}} \tag{50}$$

$$R_S \mu_n C_{ox}\frac{W}{L}\left(V_{\text{in}} - V_{\text{out}} - V_{TH}\right)\left(1 - \frac{\partial V_{\text{out}}}{\partial V_{\text{in}}} - \frac{\partial V_{TH}}{\partial V_{\text{out}}}\frac{\partial V_{\text{out}}}{\partial V_{\text{in}}}\right) = \frac{\partial V_{\text{out}}}{\partial V_{\text{in}}} \tag{51}$$

$$A_v = \frac{g_m R_S}{1 + g_m R_S(1+\eta)} = \frac{g_m R_S}{1 + (g_m + g_{mb})R_S} \approx \frac{1}{1+\eta} \tag{52}$$

Source Follower

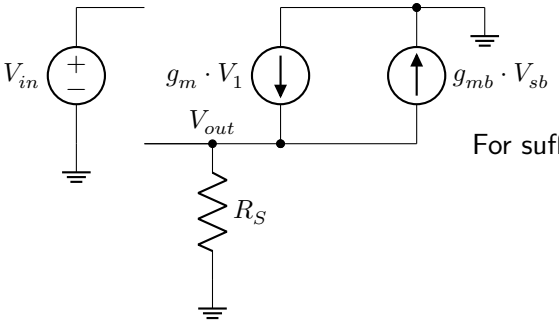

For sufficiently large V_{in}, I_D and thus g_m.

Source Follower

$$G_m = g_m \tag{53}$$

$$R_{out} = R_S \parallel \left(\frac{1}{gm + g_{mb}} \right) \tag{54}$$

$$A_v = \frac{gmR_S}{1 + (gm + g_{mb})R_S} \approx \frac{1}{1 + \eta} \tag{55}$$

$$\text{If } (g_m + g_{mb})R_S \gg 1$$

Source Follower

$$\lambda \neq 0, \gamma \neq 0 \tag{56}$$

$$G_m = g_m \tag{57}$$

$$R_{out} = r_o \parallel R_S \parallel \left(\frac{1}{gm + g_{mb}} \right) \tag{58}$$

$$A_V = \frac{g_m r_o R_S}{r_o + R_S + (g_m + g_{mb}) r_o R_S} \approx \frac{1}{1+\eta} \tag{59}$$

If $(g_m + g_{mb}) r_0 R_S \gg r_0$ and R_S

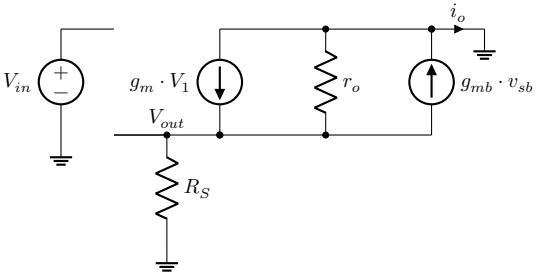

SF with Current Source

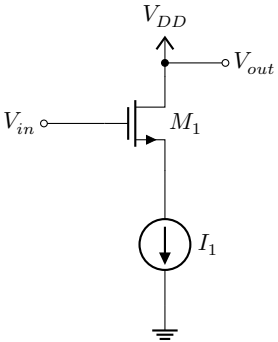

$$A_v = \frac{1}{1+\eta} \tag{60}$$

If $\gamma = 0, A_v = 1$

SF with Current Source

$$\frac{1}{2}\mu_n C_{ox}\frac{W}{L}\left(V_{\text{in}} - V_{\text{out}} - V_{TH}\right)^2 = I_1 \tag{61}$$

$$\frac{1}{2}\mu_n C_{\text{ox}}\frac{W}{L}2\left(V_{\text{in}} - V_{\text{out}} - V_{TH}\right)\left(1 - \frac{\partial V_{\text{out}}}{\partial V_{\text{in}}} - \frac{\partial V_{TH}}{\partial V_{\text{in}}}\right) = 0 \tag{62}$$

$$\mu_n C_{\text{ox}}\frac{W}{L}\left(V_{\text{in}} - V_{\text{out}} - V_{TH}\right)\left(1 - \frac{\partial V_{\text{out}}}{\partial V_{\text{in}}} - \frac{\partial V_{TH}}{\partial V_{\text{out}}}\frac{\partial V_{\text{out}}}{\partial V_{\text{in}}}\right) = 0 \tag{63}$$

SF with Current Source

$$G_m = g_m \tag{64}$$

$$R_{out} = \frac{1}{g_m + g_{mb}} \tag{65}$$

$$A_v = \frac{1}{1+\eta} \quad \text{If } \gamma = 0, A_v = 1 \tag{66}$$

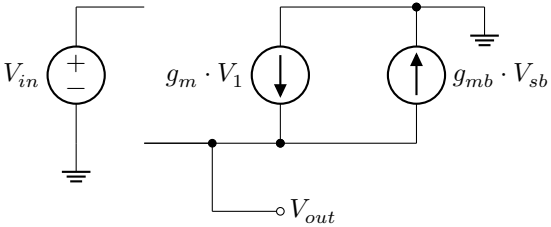

SF with Current Source

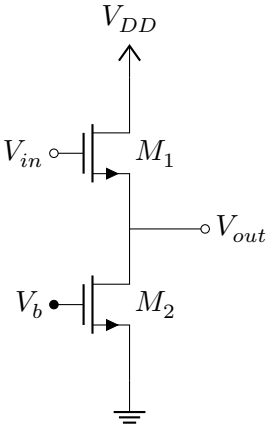

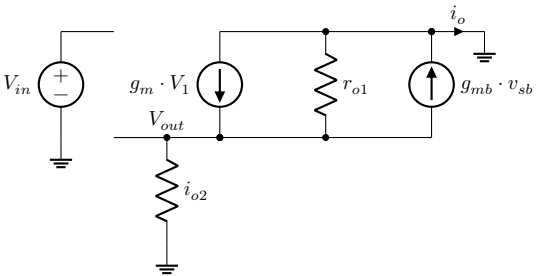

SF with Current Source

$$G_m = g_{m1} \tag{67}$$

$$R_{out} = r_{o1} \parallel r_{o2} \parallel \left(\frac{1}{g_{m_1} + g_{mb_1}} \right) \tag{68}$$

$$A_v = \frac{g_m r_{o1} r_{o2}}{r_{o1} + r_{o2} + (g_m + g_{mb}) r_{o1} r_{o2}} \tag{69}$$

If r_{o1} and r_{o2} large, A_v is linear.

SF with Current Source ($V_{SB} = 0$)

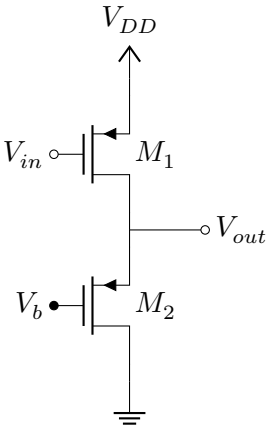

SF with Current Source ($V_{SB} = 0$)

$$G_m = g_{m1} \tag{70}$$

$$R_{out} = r_{o1} \parallel r_{o2} \parallel \frac{1}{g_{m1}} \tag{71}$$

$$A_V = \frac{g_{m1} r_{o1} r_{o2}}{r_{o1} + r_{o2} + g_{m1} r_{o1} r_{o2}} \tag{72}$$

- The sacrifice here is the higher output impedance due to smaller mobility of holes relative to electrons.

Lecture 16: Analog Circuits

VE311 Electronic Circuits

Xuyang Lu
2023 Fall

上海交通大學
SHANGHAI JIAO TONG UNIVERSITY

Recap of Last Lecture

- Source Follower

Topic to be covered

- Source Follower
- Emitter Follower
- Common Gate

CS + Source Follower

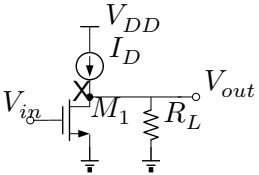

$$A_v = -gm_1 \left(r_{o1} \parallel R_L \right)$$

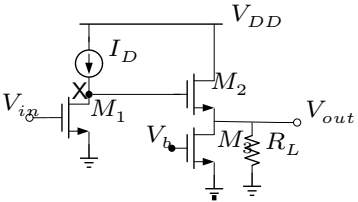

- Voltage gain severely reduced when R_L very small

$$A_v = -gm_1 r_{o1} \times gm_2 \left(r_{o2} \parallel \frac{1}{gm_2 + g_{mb2}} \parallel r_{o3} \parallel R_L \right) \quad (1)$$

- Voltage gain maintained when R_L very small

Source Follower Example

$$(W/L)_1 = 20/0.5, I_D = 0.2\ mA,\ V_{\text{THO}} = 0.6\ V, 2\Phi_F = 0.7\ V, \mu_n C_{ox} = 50\mu A/V^2, \gamma = 0.4\ V^{1/2} \text{ and } \lambda = 0$$

(a) Calculate V_{out} for $V_{in} = 1.2V$.

$$I_D = \frac{1}{2}\mu_n C_{\text{ox}} \frac{W}{L} (V_{\text{in}} - V_{\text{out}} - V_{THO})^2 \quad (2)$$

$$\rightarrow V_{\text{out}} = 0.153\ V \quad (3)$$

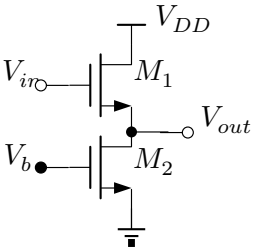

Source Follower Example

$$V_{TH1} = V_{THO} + \gamma\left(\sqrt{2\Phi_F + V_{\text{out}}} - \sqrt{2\Phi_F}\right) = 0.635\ V \quad (4)$$

$$\rightarrow V_{\text{out}} \approx 0.118\ V \quad (5)$$

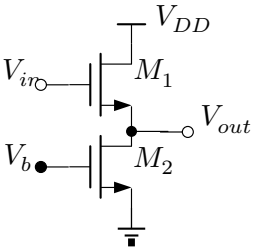

Source Follower Example

(b) Minimum $(W/L)_2$ for which M_2 remains saturated.

$$V_{\text{out}} = 0.118\ V \geq V_{GS2} - V_{TH2} \tag{6}$$

$$I_D = \frac{1}{2}\mu_n C_{ox}\frac{W}{L}\left(V_{GS2} - V_{TH2}\right)^2 \rightarrow \left(\frac{W}{L}\right)_2 \geq \frac{283}{0.5} \tag{7}$$

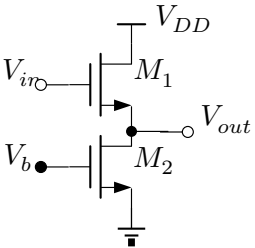

Source Follower Example

Calculate the small signal voltage gain of the circuit below.

$$G_m = g_{m1} \tag{8}$$

$$R_{out} = \frac{1}{gm_1 + gmb_1} \parallel r_{o1} \parallel \frac{1}{gm_2 + gmb_2} \parallel r_{o2} \tag{9}$$

$$A_v = G_m R_{out} \tag{10}$$

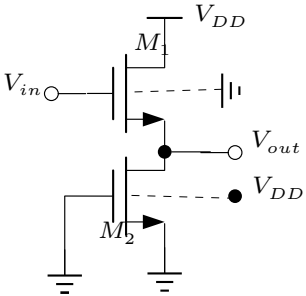

Emitter Follower

Common Collector

Reading: Sedra & Smith, 8th Ed.: 7.3 (BJT CC)

Current Amplifier

Transconductance Amplifier

Transresistance Amplifier

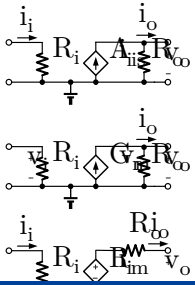

Short-Circuit Current Gain

$$A_{ix} \equiv \frac{i_o}{i_i}|_{v_o=0}(\ A/A)$$

Short-Circuit Transconductance

$$G_m \equiv \frac{i_o}{v_i}|_{v_o=0}(\ A/V)$$

Short-Circuit

$R_i = 0$

$R_o = \infty$

$R_i = \infty$

$R_o = \infty$

$R_i = 0$

$R_o = 0$

Emitter Follower

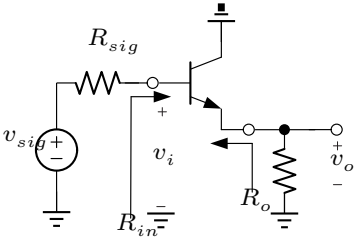

- Transistor is biased to be in the FAR using the same biasing technique for CE amplifier.

Emitter Follower impedance

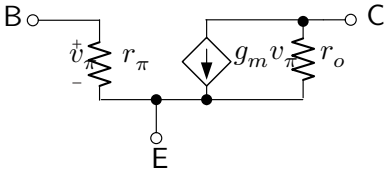

Textbook Pi-model

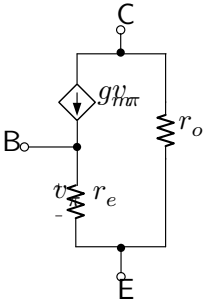

Textbook T-model

$$g_m = \frac{\alpha}{r_e} r_\pi = (\beta + 1) r_e$$

Emitter Follower impedance

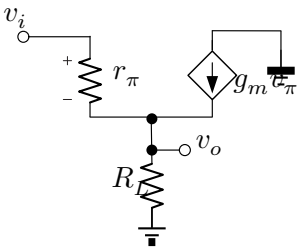

$$R_{\text{in}} = r_\pi + (\beta + 1)R_L \tag{11}$$

$$R_{\text{out}} = r_\pi \parallel (1/gm) \tag{12}$$

Emitter Follower gain

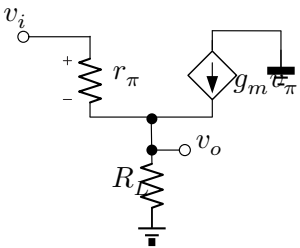

$$\frac{v_o}{v_i} = \frac{R_L}{\frac{1}{g_m + 1/r_\pi} + R_L} \tag{13}$$

CC Amplifier with Biasing Circuit

- No collector resistor
- no bypass capacitor
- Biasing scheme remains the same.
- Output taken out at the emitter.

CC Amplifier with Biasing Circuit

CC Amplifier with Biasing Circuit

Use the current relationship of i_b and i_c

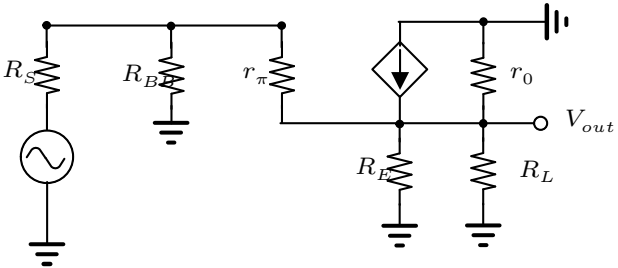

CC Amplifier with Biasing Circuit

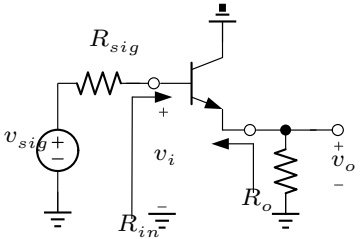

$$\frac{v_i}{v_{\text{sig}}} = \frac{R_{in}}{R_{in} + R_{sig}} = \frac{(\beta+1)(r_e + R_L)}{(\beta+1)(r_e + R_L) + R_{sig}} \tag{14}$$

$$G_v \equiv \frac{v_o}{v_{\text{sig}}} = \frac{v_i}{v_{\text{sig}}} \times A_v \tag{15}$$

$$G_v = \frac{(\beta+1)R_L}{(\beta+1)R_L + (\beta+1)r_e + R_{sig}} \tag{16}$$

CC Amplifier Swing

- Assume output is a sinusoid with peak voltage of V_P

CC Amplifier Swing

- Emitter voltage can get to within V_{CESAT} of the supply voltage before transistor enters saturation, therefore the maximum output voltage is $V_{CC} - V_{CESAT} - V_{EQ}$.

CC Amplifier Swing

Total emitter current is given by:

$$i_E = \frac{V_{EQ}}{R_E} + \frac{v_p}{R_E} + \frac{v_p}{R_L}$$

$$i_E = \frac{V_{EQ}}{R_E} - \frac{V_P}{R_E} - \frac{V_P}{R_L} = 0$$

$$\frac{V_{EQ}}{R_E} - \frac{V_P\left(R_L + R_E\right)}{R_L R_E} = 0$$

$$V_P = \frac{V_{EQ}\left(R_L\right)}{R_L + R_E}$$

$$= V_{EQ} / \left(1 + \frac{R_E}{R_L}\right)$$

$$V_{E\,\min} = V_{EQ} - V_P = \frac{V_{EQ}\left(R_E\right)}{R_L + R_E} = V_{EQ} / \left(1 + \frac{R_L}{R_E}\right)$$

Ideal Amplifier

Voltage Amp.

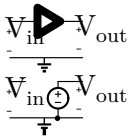

Transimpedance Amp.

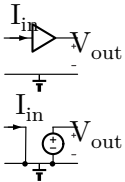

Transconductance Amp.

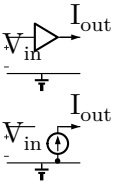

Current Amp.

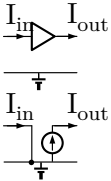

- For converting and amplifying small-signal current to voltages, common-gate provides low input impedance and moderate gain, but relatively large output impedance.

Common-Gate ($\lambda = 0, \gamma \neq 0$)

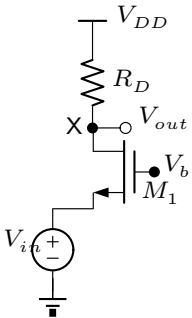

- $V_{\text{in}} > V_b - V_{TH} \rightarrow M_1$ Off
- $V_{\text{out}} = V_{DD}$
- $V_b - V_{TH} > V_{\text{in}} > V_{\text{in }1} \rightarrow M_1$ in Saturation

$$V_{\text{out}} = V_{DD} - R_D \frac{1}{2} \mu_n C_{ox} \frac{w}{L} \left(V_b - V_{\text{in}} - V_{TH}\right)^2 \quad (17)$$

Common-Gate

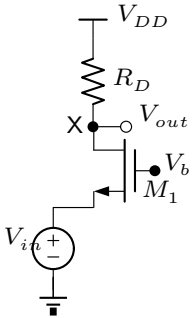

At the boundary of triode/saturation:

$$V_{\text{out}} = V_b - V_{TH} \tag{18}$$

$$= V_{DD} - R_D \frac{1}{2} \mu_n C_{ox} \frac{W}{L} \left(V_b - V_{in1} - V_{TH}\right)^2 \tag{19}$$

$$V_{\text{in}} < V_{\text{in 1}} \rightarrow M_1 \text{ in Triode} \tag{20}$$

Triode region equation as follows:

$$V_{\text{out}} = V_{DD} - R_D \mu_n C_{ox} \frac{W}{L} \left[\left(V_b - V_{in} - V_{TH}\right) \left(V_{\text{out}} - V_{in}\right) - \frac{1}{2} \left(V_{\text{out}} - V_{in}\right)^2 \right] \tag{21}$$

Common-Gate ($\lambda = 0, \gamma \neq 0$)

$$V_b - V_{TH} > V_{in} > V_{in1} \rightarrow M_1 \text{ in Saturation} \tag{22}$$

$$V_{\text{out}} = V_{DD} - R_D \frac{1}{2} \mu_n C_{ox} \frac{W}{L} \left(V_b - V_{\text{in}} - V_{TH}\right)^2 \tag{23}$$

$$\frac{\partial V_{\text{out}}}{\partial V_{\text{in}}} = -R_D \frac{1}{2} \mu_n C_{ox} \frac{W}{L} 2 \left(V_b - V_{in} - V_{TH}\right) \left(-1 - \frac{\partial V_{TH}}{\partial V_{in}}\right) \tag{24}$$

$$= R_D \mu_n C_{ox} \frac{W}{L} \left(V_b - V_{in} - V_{TH}\right) \left(1 + \frac{\partial V_{TH}}{\partial V_{\text{in}}}\right) \tag{25}$$

$$A_v = \frac{\partial V_{\text{out}}}{\partial V_{\text{in}}} = R_D g\ m(1 + \eta) \tag{26}$$

- g_m is a function of I_D and η is a function of V_{SB}.
- A_v is not quite linear.

Common-Gate ($\lambda = 0, \gamma \neq 0$ Small-signal)

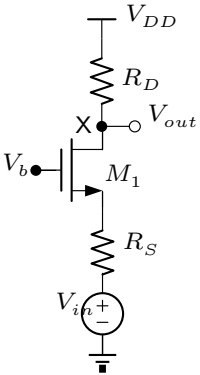

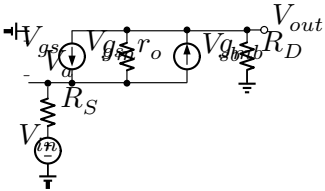

$$G_m = \frac{(gm + gmb)r_o + 1}{r_o + R_S + (gm + gmb)r_o R_S}$$

$$R_{\text{out}} = R_D \parallel [r_o + R_S + (gm + gmb)r_o R_S]$$

$$A_v = \frac{(g_m + g_{mb})r_o + 1}{r_o + R_S + (g_m + g_{mb})r_o R_S + R_D} R_D \approx R_D g_m (1 + \eta)$$

Common-Gate ($\lambda = 0, \gamma \neq 0$ Small-signal)

Common-Gate SS gain

Transconductance gain: use Norton equivalent

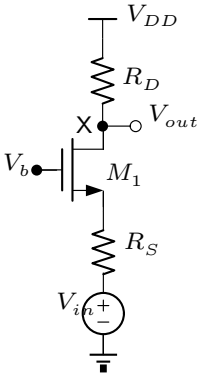

Common-Gate SS gain

Output Impedance: SS model

Lecture 17

VE 311 Analog Circuits

Xuyang Lu
2023 Summer

上海交通大學
SHANGHAI JIAO TONG UNIVERSITY

Recap of Last Lecture

- Source Follower
- Emitter Follower
- Common Gate

Topics to be Covered

- Common Gate
- Cascode
- Differential amplifier

CG Input Impedance Small-signal Analysis ($\lambda \neq 0$, $\gamma \neq 0$)

上海交通大学 SHANGHAI JIAO TONG UNIVERSITY

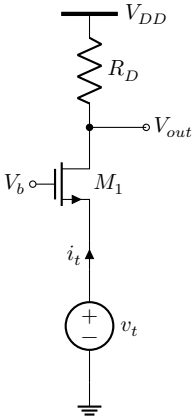

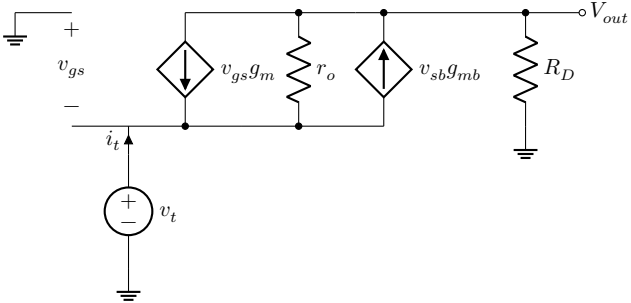

CG Input Impedance ($\lambda \neq 0$, $\gamma \neq 0$)

$$i_t = v_t(g_m + g_{mb}) + \frac{v_t - v_{out}}{r_O} \tag{1}$$

$$V_{out} = R_D i_t \tag{2}$$

$$R_{in} = \frac{R_D + r_o}{1 + (g_m + g_{mb})r_o} \begin{cases} \text{If } R_D = 0 & R_{in} = r_o \parallel \frac{1}{g_m} \parallel \frac{1}{g_{mb}} \\ \text{If } R_D = \infty & R_{in} = \infty \end{cases} \tag{3}$$

CG Output Impedance ($\lambda \neq 0$, $\gamma \neq 0$)

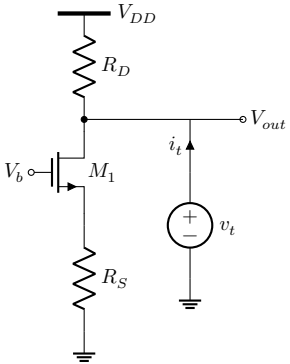

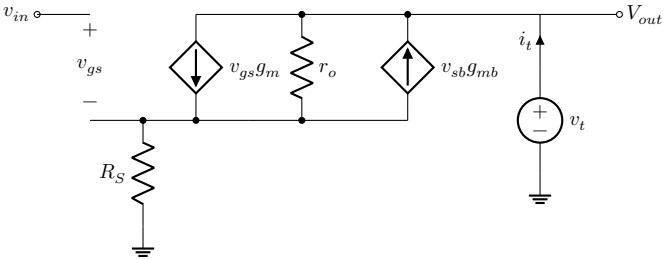

Same as CS with source degradation

$$R_{out} = [R_S + r_{o1} + (g_{m1} + g_{mb1})r_{o1}R_S] \parallel R_D \tag{4}$$

Applications of CG

Calculate the small-signal voltage gain at low frequencies of the circuits below. To minimize wave reflection at point X, the input impedance must be equal to 50Ω.

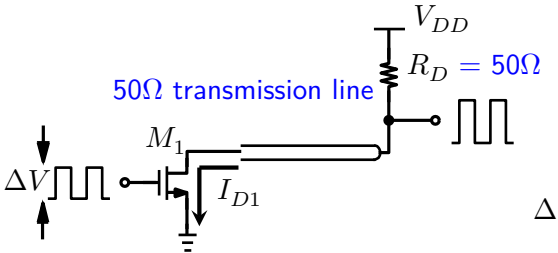

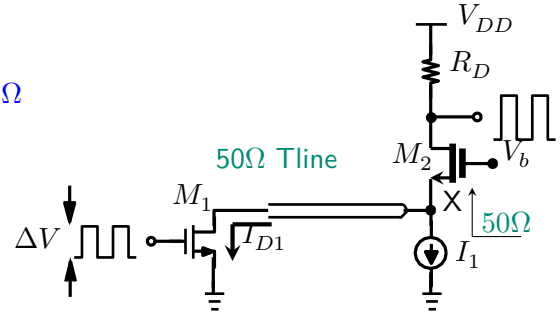

Applications of CG

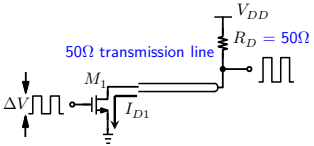

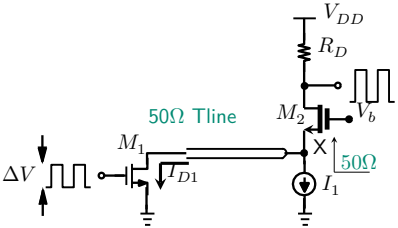

$$A_v = -g_{m1}R_D \tag{6}$$

$$A_v = -g_{m1}R_D \tag{5}$$

R_D can be much larger than 50Ω, so as to achieve a much higher gain.

$$R_{in} = \frac{R_D + r_{o2}}{1 + (g_{m2} + g_{mb2})\, r_{o2}} = 50\Omega \tag{7}$$

CG Example

Calculate the small-signal voltage gain of the circuit below. $(\lambda \neq 0, \gamma \neq 0)$

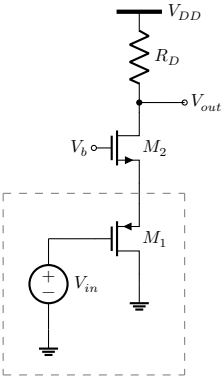

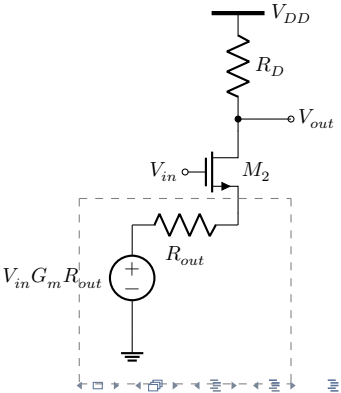

CG Example

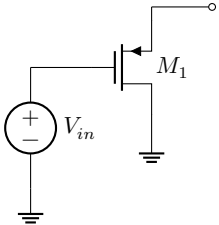

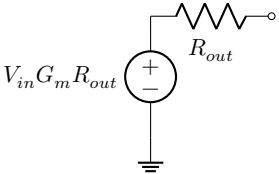

$$\begin{cases} G_m = & g_{m1} \\ R_{out} = & r_{o1} \parallel \frac{1}{g_{m1}} \parallel \frac{1}{g_{mb1}} \end{cases} \tag{8}$$

Example

Calculate the small-signal voltage gain of the circuit below. $(\lambda \neq 0, \gamma \neq 0)$

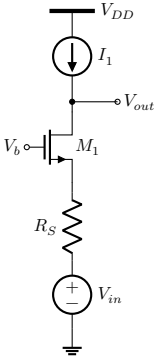

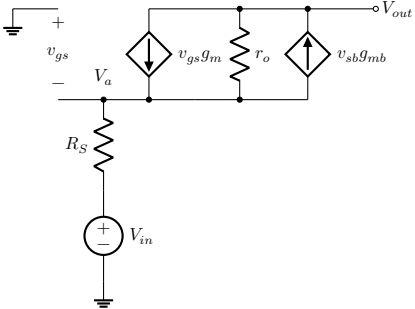

Since no current flowing in R_S, $V_a = V_{in}$

Example

$$V_{out} - V_{in}(g_m + g_{mb})r_o = V_{in} \tag{9}$$

$$A_v = \frac{V_{out}}{V_{in}} = 1 + (g_m + g_{mb})r_o \tag{10}$$

Example

Calculate the small-signal trans-impedance gain of the circuit below. $(\lambda \neq 0, \gamma \neq 0)$

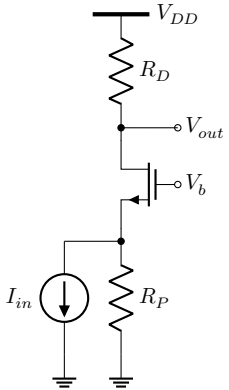

$$R_{in} = \frac{R_D + r_o}{1 + (g_m + g_{mb})r_o} \tag{11}$$

$$-i_{in}\frac{R_P}{R_{in} + R_P}R_D = V_{out} \tag{12}$$

$$\frac{V_{out}}{i_{in}} = -\frac{R_P}{R_{in} + R_P}R_D \tag{13}$$

$$= \frac{-R_P R_D[1 + (g_m + g_{mb})r_o]}{R_D + r_o + R_P + (g_m + g_{mb})r_o R_P} \tag{14}$$

Cascode

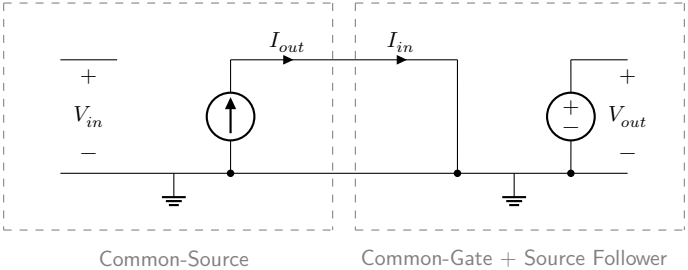

Cascode is a common gate on top of a common source.

CS + CG with Resistive Load ($\lambda \neq 0$, $\gamma \neq 0$)

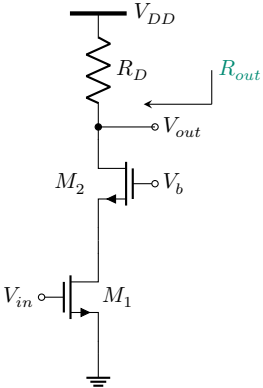

$$G_m = -g_{m1}\frac{r_{o1}}{r_{o1} + \left(r_{o2} \parallel \frac{1}{g_{m2}+g_{mb2}}\right)} \tag{15}$$

$$R_{out} = [r_{o1} + r_{o2} + (g_{m2} + g_{mb2})r_{o2}r_{o1}] \parallel R_D \tag{16}$$

CS + CG with Resistive Load ($\lambda \neq 0$, $\gamma \neq 0$)

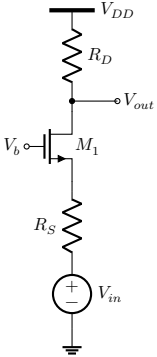

$$G_m = \frac{(g_m + g_{mb})r_{o1} + 1}{r_{o1} + R_S + (g_m + g_{mb})r_{o1}R_S} \tag{17}$$

CS + CG with Resistive Load ($\lambda \neq 0$, $\gamma \neq 0$)

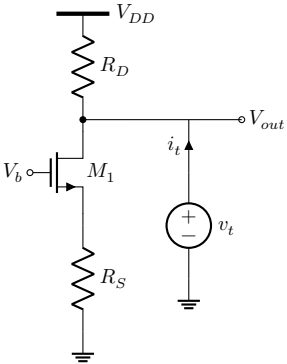

$$R_{out} = [R_S + r_{o1} + (g_{m1} + g_{mb1})r_{o1}R_S] \parallel R_D \tag{18}$$

CS + CG with Resistive Load ($\lambda \neq 0$, $\gamma \neq 0$)

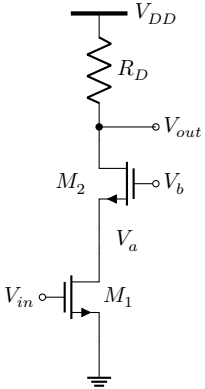

$$A_v = G_m R_{out} \tag{19}$$

$$V_a \geqq V_{in} - V_{TH1} \tag{20}$$

$$V_b - V_{GS2} \geqq V_{in} - V_{TH1} \tag{21}$$

$$V_b \geqq V_{in} - V_{TH1} + V_{GS2} \tag{22}$$

$$V_{out} \geqq V_b - V_{TH2} \geqq (V_{in} - V_{TH1}) + (V_{GS2} - V_{TH2}) \tag{23}$$

CS + CG with Ideal Current Source ($\lambda \neq 0$, $\gamma \neq 0$)

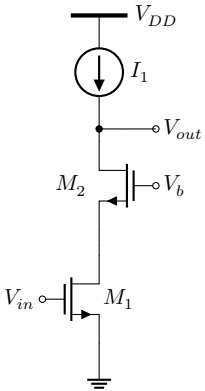

$$V_{DD} \geqq V_{out} \geqq V_{ov1} + V_{ov2} \tag{24}$$

$$G_m = -g_{m1} \frac{r_{o1}}{r_{o1} + \left(r_{o2} \parallel \frac{1}{g_{m2}+g_{mb2}}\right)} \tag{25}$$

$$R_{out} = r_{o1} + r_{o2} + (g_{m2} + g_{mb2}) r_{o2} r_{o1} \tag{26}$$

$$A_v = G_m R_{out} \tag{27}$$

CS + CG with Ideal Current Source ($\lambda \neq 0$, $\gamma \neq 0$)

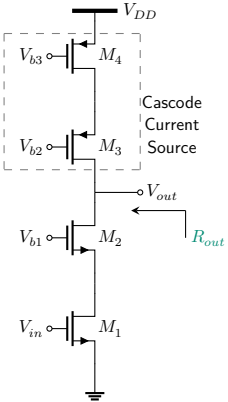

$$G_m = -g_{m1}\frac{r_{o1}}{r_{o1} + (r_{o2} \parallel \frac{1}{g_{m2}g_{mb2}})} \tag{28}$$

$$R_{out} = [r_{o1} + r_{o2} + (g_{m2} + g_{mb2})r_{o2}r_{o1}] \parallel [r_{o3} + r_{o4} + (g_{m3} + g_{mb3})r_{o3}r_{o4}] \tag{29}$$

$$A_v = G_m R_{out} \tag{30}$$

$$V_{DD} - V_{ov3} - V_{ov4} \geqq V_{out} \geqq V_{ov1} + V_{ov2} \tag{31}$$

CS + CG with Ideal Current Source

Can we cascode more to get higher gain?
Problems:

1. Headroom
2. nA of current makes it sensitive towards leakage, PVT, noise
3. Because how output impedance scales, you will only see triple cascode in MOSFET but not in BJT.

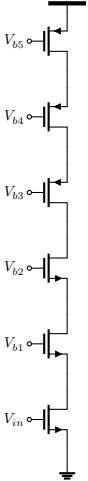

Folded Cascode ($\lambda \neq 0$, $\gamma \neq 0$)

We don't care about M_3's non-ideality.

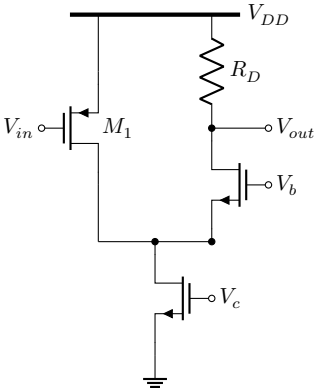

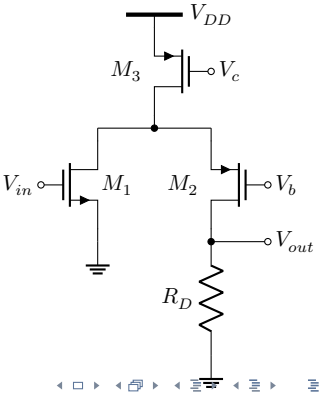

Folded Cascode ($\lambda \neq 0$, $\gamma \neq 0$)

$$G_m = -g_{m1} \frac{(r_{o1} \parallel r_{o3})}{(r_{o1} \parallel r_{o3}) + \left(r_{o2} \parallel \frac{1}{g_{m2}+g_{mb2}}\right)} \tag{32}$$

$$R_{out} = [(r_{o1} \parallel r_{o3}) + r_{o2} + (g_{m2} + g_{mb2}) r_{o2} (r_{o1} \parallel r_{o3})] \parallel R_D \tag{33}$$

$$A_v = G_m R_{out} \tag{34}$$

Single-Ended vs Differential Signals

Single-ended

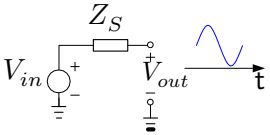

Differential

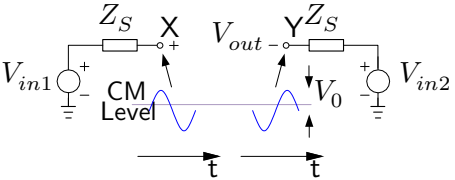

- $B - C = A$ (matters)
- $(B + C)/2 =$ common-mode level (doesn't matter)
- Single-ended signal: a voltage signal measured with respect to ground
- Differential signal: a voltage signal measured between two nodes, each having equal amplitude and opposite phase around a common-mode (CM) level

Common-Mode Noise Rejection

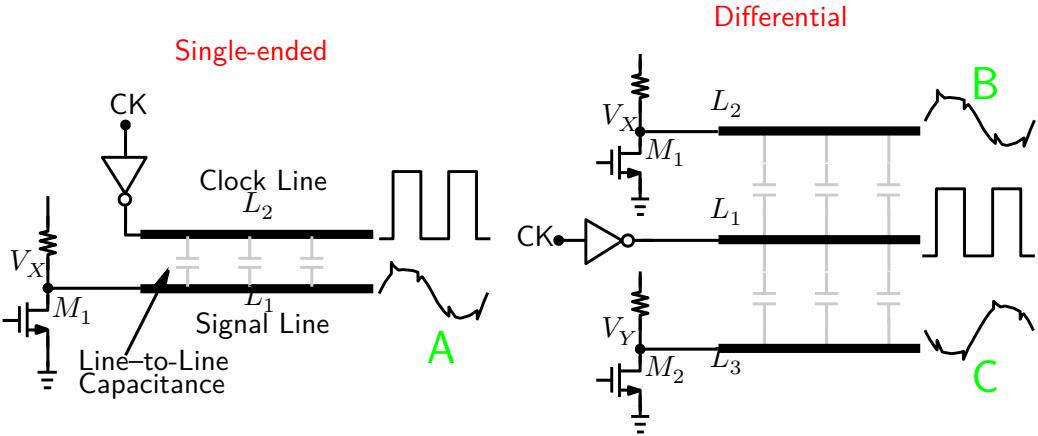

Common-Mode Noise Rejection

- A corrupted; B corrupted; C corrupted
- $(B + C)/2 =$ CM corrupted
- $(B - C)$ not corrupted

Increased Output Swing

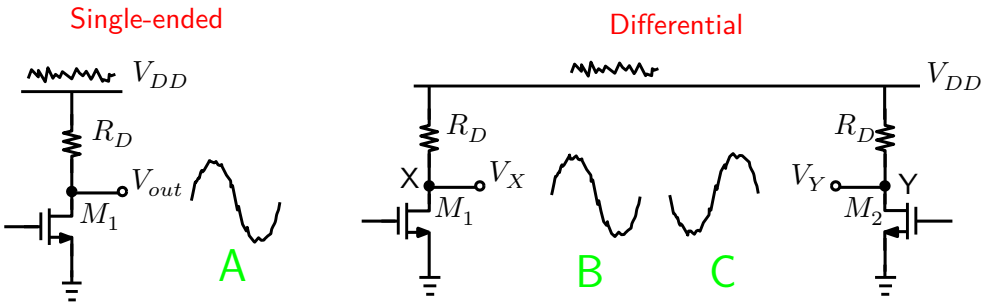

- $(V_{GS1} - V_{TH1}) \leq A \leq V_{DD}$
- $(V_{GS1,2} - V_{TH1,2}) - V_{DD} \leq (B - C) \leq V_{DD} - (V_{GS1,2} - V_{TH1,2})$

$V_{in,CM}$ and $V_{out,CM}$

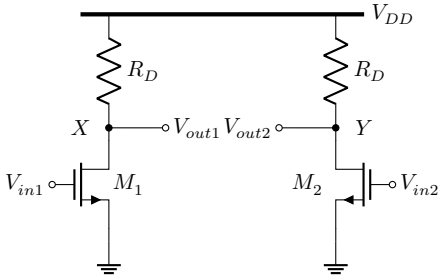

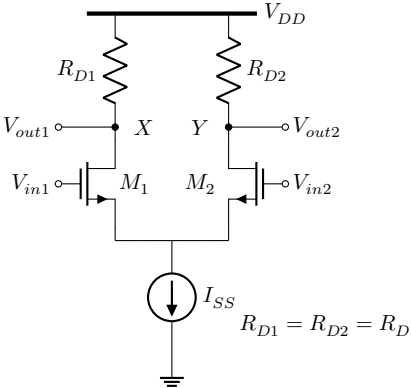

$V_{in,CM}$ and $V_{out,CM}$

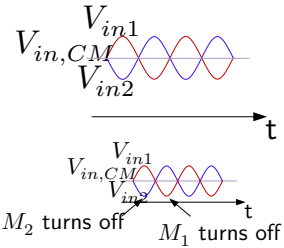

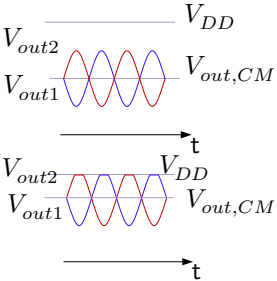

- $V_{out,CM}$ dependent on $V_{in,CM}$

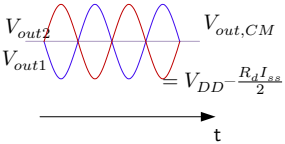

- $V_{out,CM}$ independent from $V_{in,CM}$
- Better design

Common-Mode + Differential-Mode

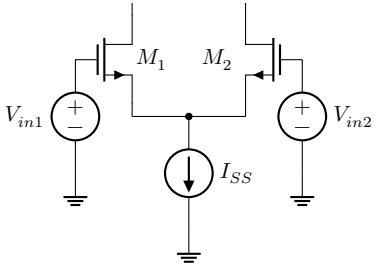

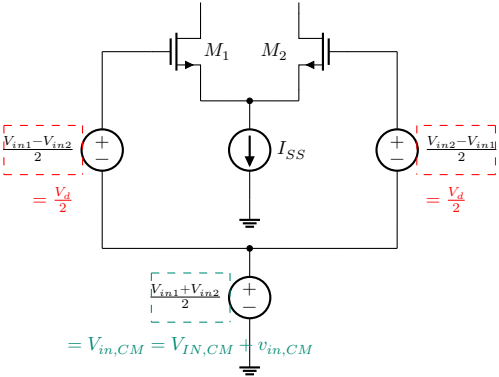

Not necessarily fully differential

Common-Mode + Differential-Mode

$$A_{DM} = \frac{V_{out1} - V_{out2}}{V_d} \quad (35)$$

$$A_{CM} = \frac{V_{out,CM}}{V_{in,CM}} \quad (36)$$

$$A_{CM-DM} = \frac{V_{out1} - V_{out2}}{V_{in,CM}} \quad (37)$$

$$CMRR = \left| \frac{A_{DM}}{A_{CM-DM}} \right| \quad (38)$$

Differential-Mode (Qualitative Analysis)

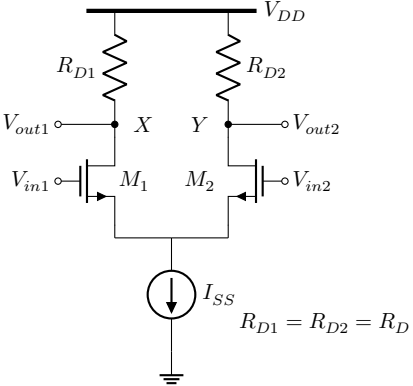

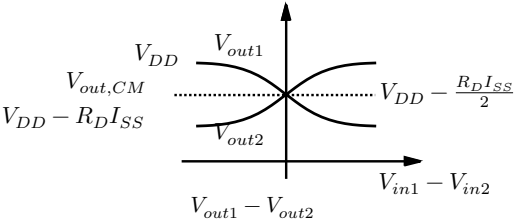

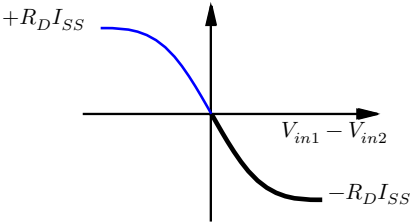

Differential-Mode (DC Analysis) ($\lambda = 0$, $\gamma = 0$)

$$V_{in1} - V_{GS1} = V_{in2} - V_{GS2} \tag{39}$$

$$V_{in1} - V_{in2} = V_{GS1} - V_{GS2} \tag{40}$$

$$= (V_{GS1} - V_{TH}) - (V_{GS2} - V_{TH}) \tag{41}$$

$$= \sqrt{\frac{2I_{D1}}{\mu_n C_{ox}\frac{W}{L}}} - \sqrt{\frac{2I_{D2}}{\mu_n C_{ox}\frac{W}{L}}} \tag{42}$$

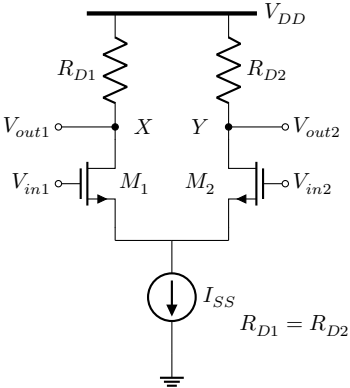

$R_{D1} = R_{D2} = R_D$

Differential-Mode (DC Analysis)

$$(V_{in1} - V_{in2})^2 \tag{43}$$

$$= \frac{2I_{D1}}{\mu_n C_{ox}\frac{W}{L}} + \frac{2I_{D2}}{\mu_n C_{ox}\frac{W}{L}} - 2\frac{\sqrt{4I_{D1}I_{D2}}}{\mu_n C_{ox}\frac{W}{L}} \tag{44}$$

$$\frac{2}{\mu_n C_{ox}\frac{W}{L}}\left(I_{SS} - 2\sqrt{I_{D1}I_{D2}}\right) \tag{45}$$

$$\frac{1}{2}\mu_n C_{ox}\frac{W}{L}(V_{in1} - V_{in2})^2 = I_{SS} - 2\sqrt{I_{D1}I_{D2}} \tag{46}$$

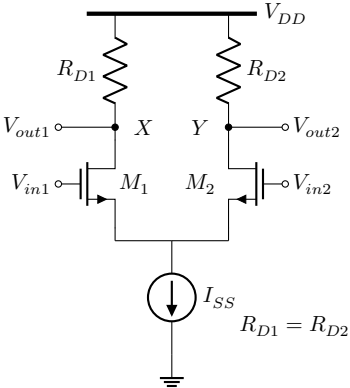

$R_{D1} = R_{D2} = R_D$

Differential-Mode (DC Analysis)

$$\frac{1}{2}\mu_n C_{ox}\frac{W}{L}(V_{in1}-V_{in2})^2 - I_{SS} = -2\sqrt{I_{D1}I_{D2}} \tag{47}$$

$$\frac{1}{4}(\mu_n C_{ox}\frac{W}{L})^2(V_{in1}-V_{in2})^4 + {I_{SS}}^2 - \mu_n C_{ox}\frac{W}{L}(V_{in1}-V_{in2})^2 I_{SS} = 4I_{D1}I_{D2} \tag{48}$$

$$\frac{1}{4}(\mu_n C_{ox}\frac{W}{L})^2(V_{in1}-V_{in2})^4 + I_{SS}^2 - \mu_n C_{ox}\frac{W}{L}(V_{in1}-V_{in2})^2 I_{SS} = I_{SS}^2 - (I_{D1}-I_{D2})^2 \tag{49}$$

$$\Delta I_D = \frac{1}{2}\mu_n C_{ox}\frac{W}{L}\Delta V_{in}\sqrt{\frac{4I_{SS}}{\mu_n C_{ox}\frac{W}{L}} - {\Delta V_{in}}^2} \tag{50}$$

Differential-Mode (DC Analysis)

$$\Delta I_D = \frac{1}{2}\mu_n C_{ox}\frac{W}{L}\Delta V_{in}\sqrt{\frac{4I_{SS}}{\mu_n C_{ox}\frac{W}{L}} - \Delta V_{in}{}^2} \tag{51}$$

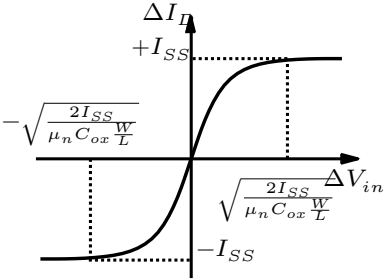

Differential-Mode (DC Analysis)

$$G_m = \frac{\partial \Delta I_D}{\partial \Delta V_{in}} \tag{52}$$

$$= \frac{1}{2}\mu_n C_{ox}\frac{W}{L}\frac{\frac{4I_{ss}}{\mu_n C_{ox}\frac{W}{L}} - 2\Delta V_{in}^2}{\sqrt{\frac{4I_{ss}}{\mu_n C_{ox}\frac{W}{L}} - \Delta V_{in}^2}} \tag{53}$$

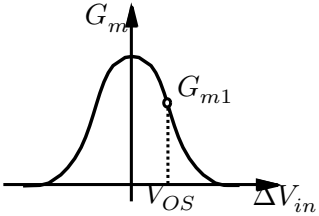

At $\Delta V_{in} = 0$,

$$A_{DM} = \frac{V_{out1} - V_{out2}}{\Delta V_{in}} = -g_{m1,2}R_D \tag{54}$$

- Larger I_{SS} leads to higher G_m and wider input range.
- Smaller W/L leads to lower G_m but wider input range.

Differential-Mode (Superposition)

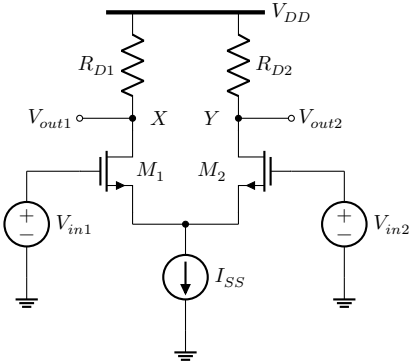

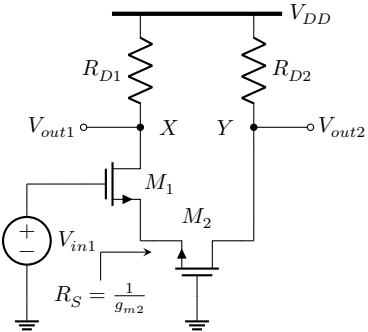

$$V_{out1} = -\frac{R_D}{\frac{1}{g_{m1}} + \frac{1}{g_{m2}}} V_{in1} \qquad (55)$$

Differential-Mode (Superposition)

Small-signal Analysis

$\lambda \neq 0$
$\gamma \neq 0$

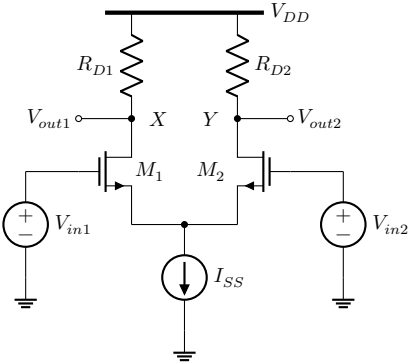

Differential-Mode (Superposition)

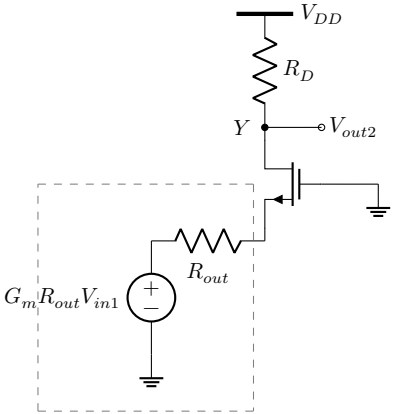

$$G_m = g_{m1} \tag{56}$$

$$R_{out} = \frac{1}{g_{m1}} \tag{57}$$

$$V_{out2} = -\frac{R_D}{\frac{1}{g_{m1}} + \frac{1}{g_{m2}}} V_{in1} \tag{58}$$

Differential-Mode (Superposition)

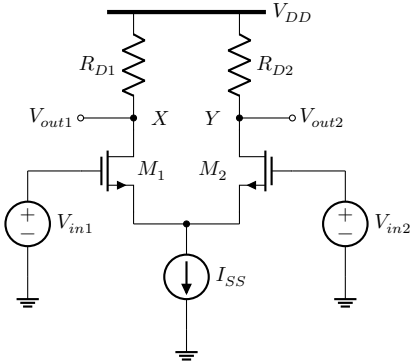

$$V_{out1} - V_{out2} = -\frac{2R_D}{\frac{1}{g_{m1}} + \frac{1}{g_{m2}}} V_{in1} \quad (59)$$

$$= -g_m R_D V_{in1} \quad (60)$$

$$V_{out1} - V_{out2} = -\frac{2R_D}{\frac{1}{g_{m1}} + \frac{1}{g_{m2}}} V_{in2} \quad (61)$$

$$= -g_m R_D V_{in2} \quad (62)$$

Differential-Mode (Superposition)

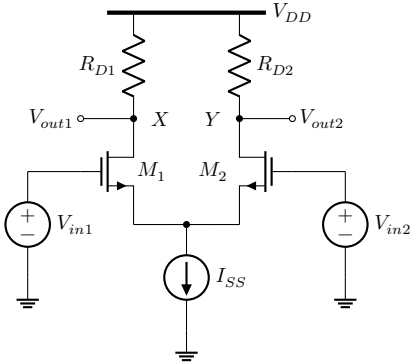

$$A_{DM} = \frac{V_{out1} - V_{out2}}{V_{in1} - V_{in2}} \tag{63}$$

$$= -g_m R_D \tag{64}$$

Differential pair

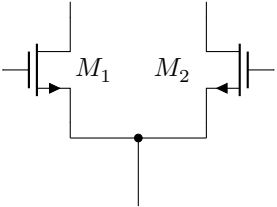

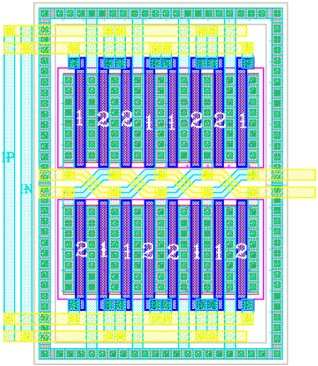

Example

Calculate the A_{DM} of the differential pair below if the biasing conditions of M_1 and M_2 are the same.

$$V_{out1} - V_{out2} = -\frac{2R_D}{\frac{1}{g_{m1}} + \frac{1}{g_{m2}}} V_{in1} = -\frac{4}{3} g_m R_D V_{in1} \quad (65)$$

$$V_{out1} - V_{out2} = -\frac{2R_D}{\frac{1}{g_{m1}} + \frac{1}{g_{m2}}} V_{in2} = -\frac{4}{3} g_m R_D V_{in2} \quad (66)$$

$$A_{DM} = \frac{V_{out1} - V_{out2}}{V_{in1} - V_{in2}} = -\frac{4}{3} g_m R_D \quad (67)$$

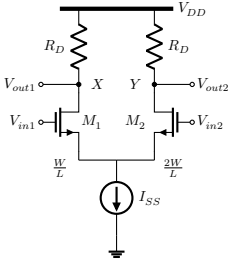

Small-Signal, Half-circuit ($\lambda \neq 0$, $\gamma \neq 0$)

- Assume the circuit is fully symmetric.
- For $i_{d1} + i_{d2} = 0$ and $g_{m1}\frac{v_d}{2} + g_{m2}(-\frac{v_d}{2}) = 0$, V_P must be a constant voltage in DC analysis and a virtual ground in small-signal analysis.

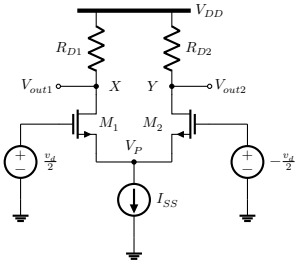

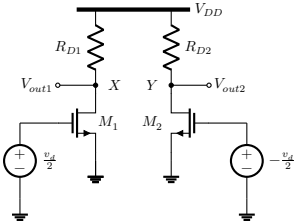

Small-Signal, Half-circuit ($\lambda \neq 0$, $\gamma \neq 0$)

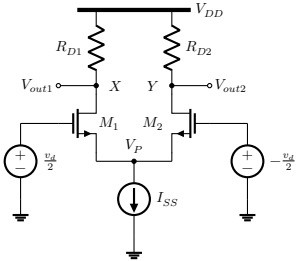

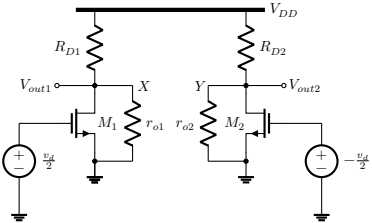

$$V_{out1} = -g_m(R_D \parallel r_o)\frac{v_d}{2} \tag{68}$$

$$V_{out2} = -g_m(R_D \parallel r_o)(-\frac{v_d}{2}) \tag{69}$$

$$A_{DM} = \frac{V_{out1} - V_{out2}}{v_d} = -g_m(R_D \parallel r_o) \tag{70}$$

Common-Mode Response ($\lambda \neq 0$, $\gamma \neq 0$)

If the circuit is fully symmetric,

$$A_{CM-DM} = \frac{V_{out1} - V_{out2}}{v_{in,CM}} = 0 \qquad (71)$$

$$CMRR = \left| \frac{A_{DM}}{A_{CM-DM}} \right| = \infty \qquad (72)$$

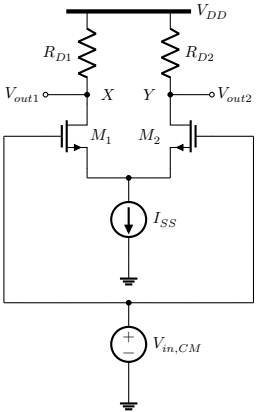

Common-Mode Response ($\lambda \neq 0$, $\gamma \neq 0$)

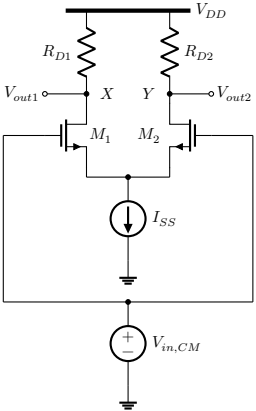

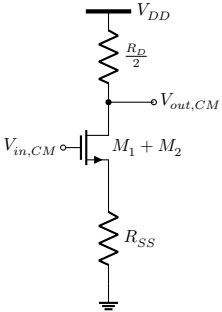

Perturbing biasing condition $\rightarrow$ Altering transconductance (g_m)

Common-Mode Response ($\lambda \neq 0$, $\gamma \neq 0$)

If the circuit is fully symmetric,

$$A_{CM} = \frac{V_{out,CM}}{V_{in,CM}} \tag{73}$$

$$= \frac{-2g_m \frac{r_o}{2}}{R_{SS} + \frac{r_o}{2} + (2g_m + 2g_{mb2})\frac{r_o}{2}R_{SS}} \cdot \frac{\left[R_{SS} + \frac{r_o}{2} + (2g_m + 2g_{mb})\frac{r_o}{2}R_{SS}\right]\frac{R_D}{2}}{\left[R_{SS} + \frac{r_o}{2} + (2g_m + 2g_{mb})\frac{r_o}{2}R_{SS}\right] + \frac{R_D}{2}} \tag{74}$$

$$= 0 \quad \text{if } R_{SS} = \infty \tag{75}$$

Nonzero R_{SS} ($\lambda = 0$, $\gamma = 0$)

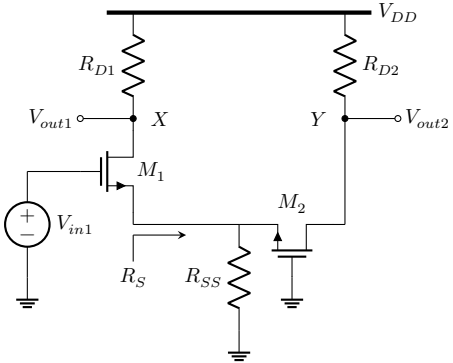

$$R_S = \frac{1}{g_{m2}} \parallel R_{SS} \tag{76}$$

Nonzero R_{SS} ($\lambda = 0$, $\gamma = 0$)

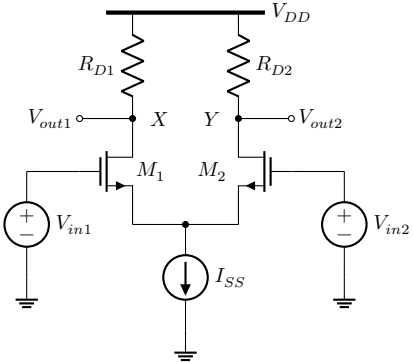

$$V_{out1} = -\frac{R_D}{\frac{1}{g_{m1}} + \left(\frac{1}{g_{m2}} \parallel R_{SS}\right)} V_{in1} \quad (77)$$

Nonzero R_{SS} ($\lambda = 0$, $\gamma = 0$)

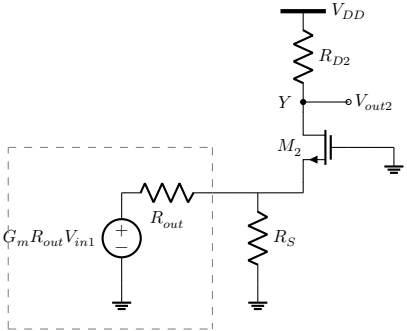

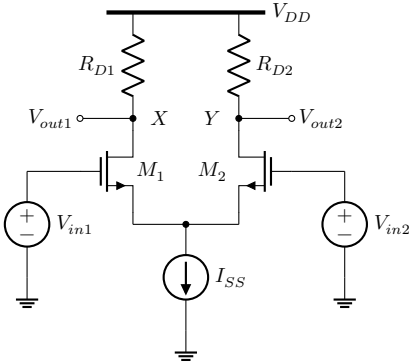

$$G_m = g_{m1} \tag{78}$$

$$R_{out} = \frac{1}{g_{m1}} \tag{79}$$

$$V_{out2} = -\frac{\frac{R_{SS}}{R_{SS}+\frac{1}{g_{m2}}} R_D}{\frac{1}{g_{m1}} + \left(\frac{1}{g_{m2}} \parallel R_{SS}\right)} V_{in1} \tag{80}$$

Nonzero R_{SS}

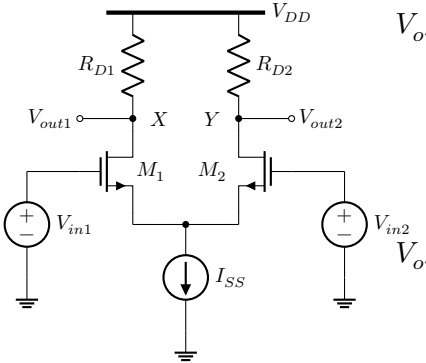

$$V_{out1} - V_{out2} = -\frac{(g_{m1} + 2R_{SS}g_{m1}g_{m2})R_D}{1 + (g_{m1} + g_{m2})R_{SS}} V_{in1} \quad (81)$$

$$= -g_m R_D V_{in1} \quad (82)$$

$$V_{out1} - V_{out2} = -\frac{(g_{m1} + 2R_{SS}g_{m1}g_{m2})R_D}{1 + (g_{m1} + g_{m2})R_{SS}} V_{in1} \quad (83)$$

$$= -g_m R_D V_{in2} \quad (84)$$

Nonzero R_{SS}

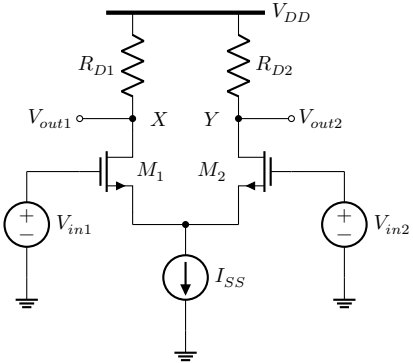

$$A_{DM} = \frac{V_{out1} - V_{out2}}{V_{in1} - V_{in2}} = -g_m R_D \qquad (85)$$

A_{DM} with MOS Loads ($\lambda \neq 0$, $\gamma \neq 0$)

Higher A_{DM}

- $\rightarrow$ Smaller $(W/L)_P$
- $\rightarrow$ Larger $(V_{SGP}–V_{THP})$
- $\rightarrow$ Smaller $V_{in,CM}$ headroom

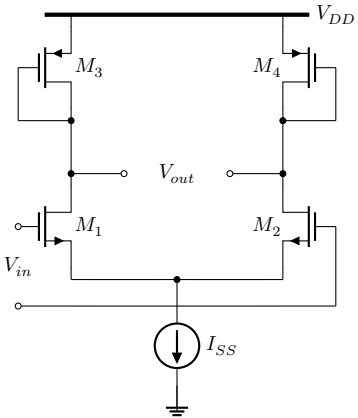

A_{DM} with MOS Loads ($\lambda \neq 0$, $\gamma \neq 0$)

$$V_{out1} = -g_{mN}(r_{oN} \parallel r_{oP} \parallel \frac{1}{g_{mP}})\frac{v_d}{2} \tag{86}$$

$$V_{out2} = -g_{mN}(r_{oN} \parallel r_{oP} \parallel \frac{1}{g_{mP}})(-\frac{v_d}{2}) \tag{87}$$

$$A_{DM} = \frac{V_{out1} - V_{out2}}{v_d} = -g_{mN}\left(r_{oN} \parallel r_{oP} \parallel \frac{1}{g_{mP}}\right) \tag{88}$$

$$\approx -\frac{g_{mN}}{g_{mP}} \approx -\sqrt{\frac{\mu_n (W/L)_N}{\mu_p (W/L)_P}} \tag{89}$$

A_{DM} with MOS Loads ($\lambda \neq 0$, $\gamma \neq 0$)

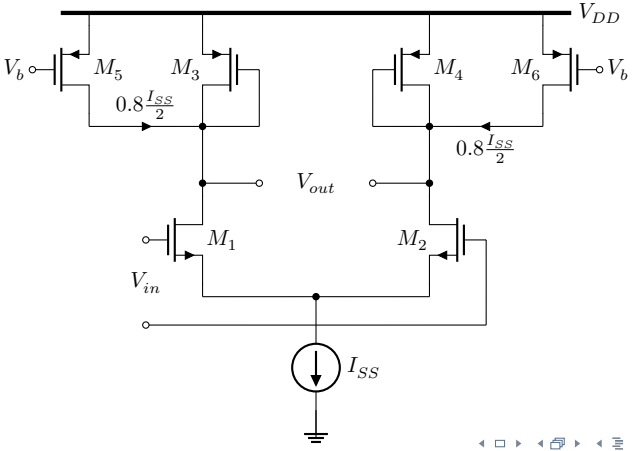

A_{DM} with MOS Loads

$$V_{out1} = -g_{m1,2}\left(r_{o1,2} \parallel r_{o3,4} \parallel \frac{1}{g_{m3,4}} \parallel r_{o5,6}\right)\frac{v_d}{2} \tag{90}$$

$$V_{out2} = -g_{m1,2}\left(r_{o1,2} \parallel r_{o3,4} \parallel \frac{1}{g_{m3,4}} \parallel r_{o5,6}\right)(-\frac{v_d}{2}) \tag{91}$$

$$A_{DM} = \frac{V_{out1} - V_{out2}}{v_d} \approx -\frac{g_{m1,2}}{g_{m3,4}} \approx -\sqrt{\frac{5\mu_n(W/L)_{1,2}}{\mu_p(W/L)_{3,4}}} \tag{92}$$

A_{DM} with MOS Loads ($\lambda \neq 0$, $\gamma \neq 0$)

$$V_{out1} = -g_{m1,2}(r_{o1,2} \parallel r_{o3,4})\frac{v_d}{2} \quad (93)$$

$$V_{out2} = -g_{m1,2}(r_{o1,2} \parallel r_{o3,4})(-\frac{v_d}{2}) \quad (94)$$

$$A_{DM} = \frac{V_{out1} - V_{out2}}{v_d} \quad (95)$$

$$= -g_{m1,2}(r_{o1,2} \parallel r_{o3,4}) \quad (96)$$

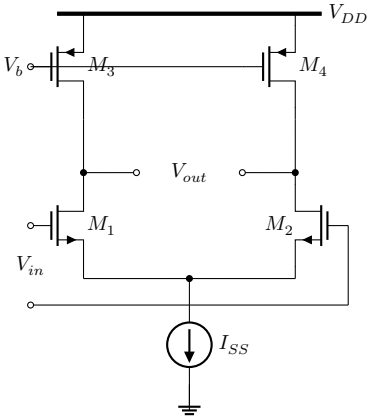

A_{DM} with MOS Loads ($\lambda \neq 0$, $\gamma \neq 0$)

Higher R_{out}
$\rightarrow$ High A_{DM}
$\rightarrow$ Small $V_{in,CM}$ headroom
Telescopic cascode

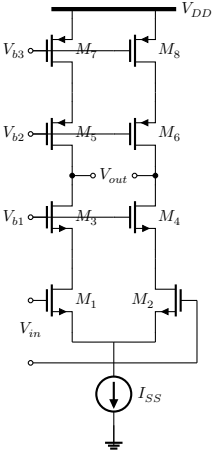

A_{DM} with MOS Loads ($\lambda \neq 0$, $\gamma \neq 0$)

$$V_{out1} \cong -g_{m1,2}\left\{[r_{o1,2} + r_{o3,4} + (g_{m3,4} + g_{mb3,4})r_{o3,4}r_{o1,2}] \parallel [r_{o7,8} + r_{o5,6} + (g_{m5,6} + g_{mb5,6})r_{o5,6}r_{o7,8}]\right\}\frac{v_d}{2} \tag{97}$$

$$V_{out2} \cong -g_{m1,2}\left\{[r_{o1,2} + r_{o3,4} + (g_{m3,4} + g_{mb3,4})r_{o3,4}r_{o1,2}] \parallel [r_{o7,8} + r_{o5,6} + (g_{m5,6} + g_{mb5,6})r_{o5,6}r_{o7,8}]\right\}(-\frac{v_d}{2}) \tag{98}$$

$$A_{DM} = \frac{V_{out1} - V_{out2}}{v_d} \cong -g_{m1,2}[(g_{m3,4} + gmb_{3,4})r_{o3,4}r_{o1,2} \parallel (g_{m5,6} + g_{mb5,6})r_{o5,6}r_{o7,8}] \tag{99}$$

Differential Pair with Active Load

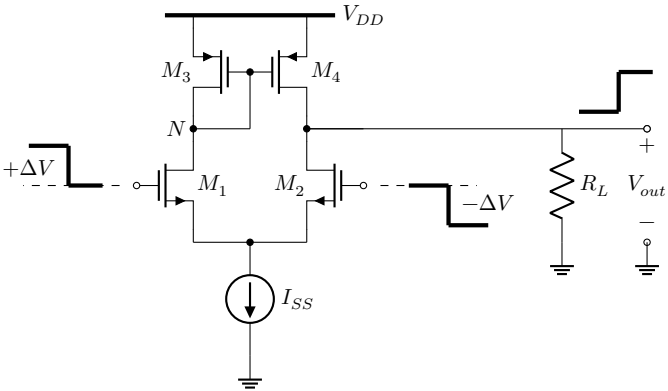

Asymmetric Differential Pair

Why N is not on the right branch?
Caveat: Because of the vastly different resistance magnitude at the drains of M_1 and M_2, the voltage swings at these two nodes are different and therefore node P cannot be viewed as a virtual ground when $V_{in2} = -V_{in1}$.

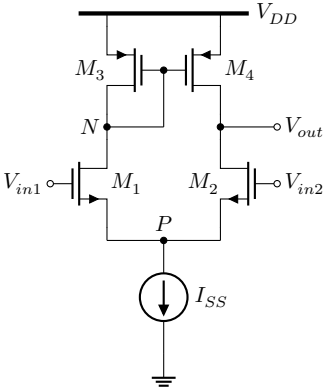

OPA Layout

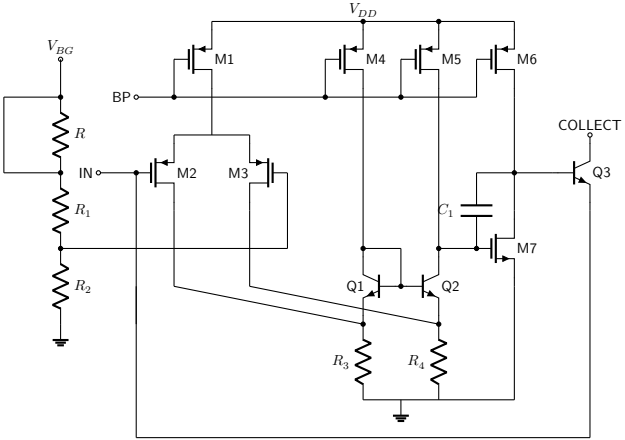

OPA Layout

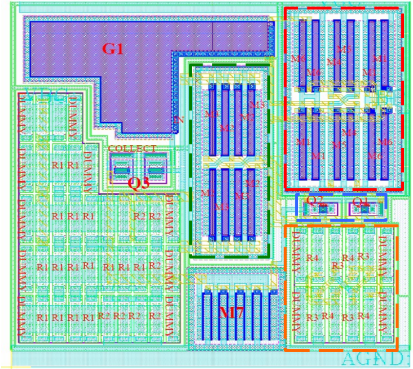

OPA Layout

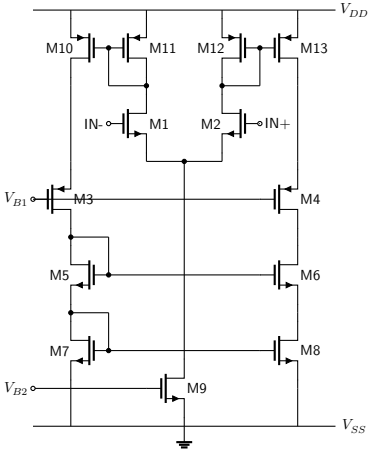

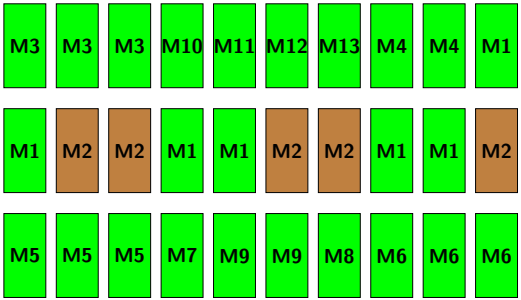

Floor Plan

Lecture 18

VE 311 Analog Circuits

Xuyang Lu
2023 Summer

上海交通大學
SHANGHAI JIAO TONG UNIVERSITY

Recap of Last Lecture

- Common Gate
- Cascode (Telescopic, Folded)
- Differential Amplifier (Current Equation, Superposition)

Midterm Statistics

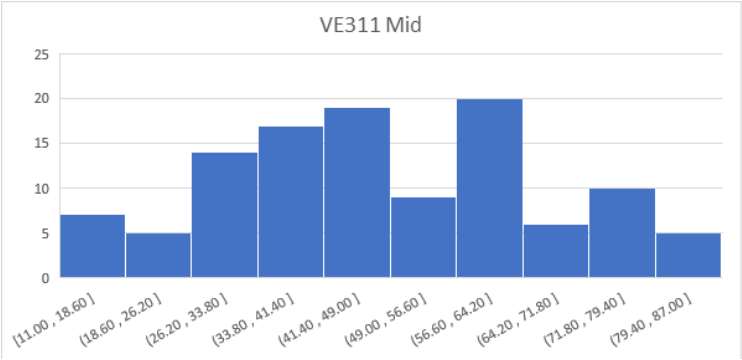

Q1=36, Q2=47, and Q3=61. Total mean=48.04, freshman and sophomore mean=59.56, junior mean=43.93, senior mean=42.61

Topics to be Covered

- Differential Amplifier (Half circuit method)
- More on differential amplifier topologies
- Current mirror

Folded Cascode ($\lambda \neq 0$, $\gamma \neq 0$)

We don't care about M_3's non-ideality.

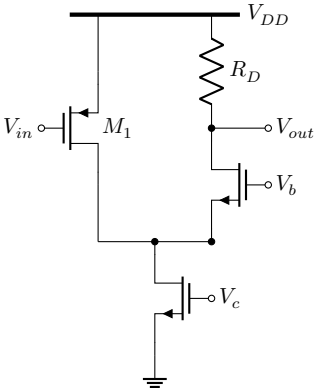

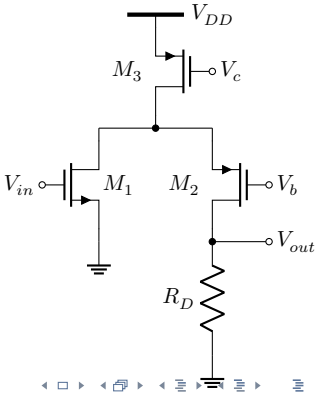

Folded Cascode ($\lambda \neq 0$, $\gamma \neq 0$)

$$G_m = -g_{m1} \frac{(r_{o1} \parallel r_{o3})}{(r_{o1} \parallel r_{o3}) + \left(r_{o2} \parallel \frac{1}{g_{m2}+g_{mb2}}\right)} \tag{1}$$

$$R_{out} = [(r_{o1} \parallel r_{o3}) + r_{o2} + (g_{m2} + g_{mb2}) r_{o2} (r_{o1} \parallel r_{o3})] \parallel R_D \tag{2}$$

$$A_v = G_m R_{out} \tag{3}$$

Differential-Mode (Superposition)

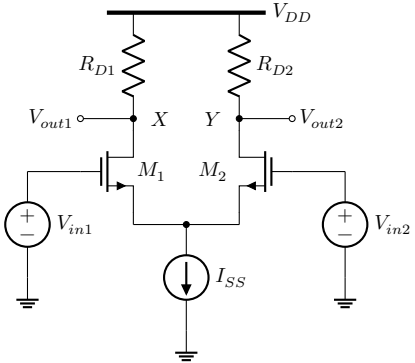

$$A_{DM} = \frac{V_{out1} - V_{out2}}{V_{in1} - V_{in2}} \quad (4)$$

$$= -g_m R_D \quad (5)$$

Small-Signal, Half-circuit ($\lambda \neq 0$, $\gamma \neq 0$)

- Assume the circuit is fully symmetric.
- For $i_{d1} + i_{d2} = 0$ and $g_{m1}\frac{v_d}{2} + g_{m2}(-\frac{v_d}{2}) = 0$, V_P must be a constant voltage in DC analysis and a virtual ground in small-signal analysis.

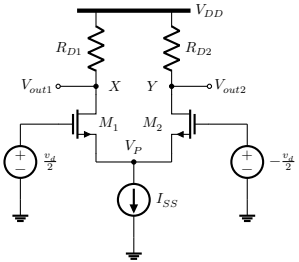

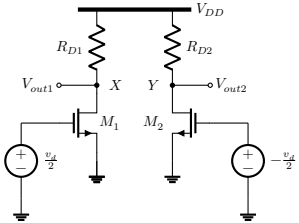

Small-Signal, Half-circuit ($\lambda \neq 0$, $\gamma \neq 0$)

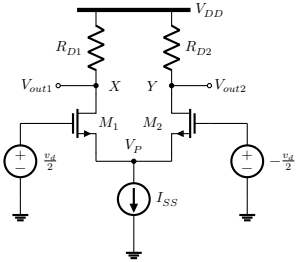

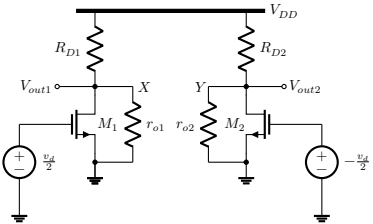

$$V_{out1} = -g_m(R_D \parallel r_o)\frac{v_d}{2} \tag{6}$$

$$V_{out2} = -g_m(R_D \parallel r_o)(-\frac{v_d}{2}) \tag{7}$$

$$A_{DM} = \frac{V_{out1} - V_{out2}}{v_d} = -g_m(R_D \parallel r_o) \tag{8}$$

Common-Mode Response ($\lambda \neq 0$, $\gamma \neq 0$)

If the circuit is fully symmetric,

$$A_{CM-DM} = \frac{V_{out1} - V_{out2}}{v_{in,CM}} = 0 \qquad (9)$$

$$CMRR = \left| \frac{A_{DM}}{A_{CM-DM}} \right| = \infty \qquad (10)$$

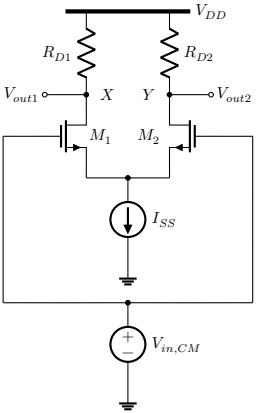

Common-Mode Response ($\lambda \neq 0$, $\gamma \neq 0$)

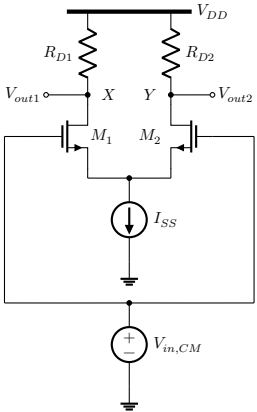

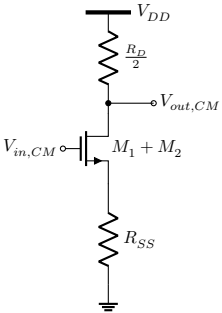

Perturbing biasing condition $\rightarrow$ Altering transconductance (g_m)

Common-Mode Response ($\lambda \neq 0$, $\gamma \neq 0$)

If the circuit is fully symmetric,

$$A_{CM} = \frac{V_{out,CM}}{V_{in,CM}} \tag{11}$$

$$= \frac{-2g_m \frac{r_o}{2}}{R_{SS} + \frac{r_o}{2} + (2g_m + 2g_{mb2})\frac{r_o}{2}R_{SS}} \cdot \frac{\left[R_{SS} + \frac{r_o}{2} + (2g_m + 2g_{mb})\frac{r_o}{2}R_{SS}\right]\frac{R_D}{2}}{\left[R_{SS} + \frac{r_o}{2} + (2g_m + 2g_{mb})\frac{r_o}{2}R_{SS}\right] + \frac{R_D}{2}} \tag{12}$$

$$= 0 \quad \text{if } R_{SS} = \infty \tag{13}$$

Nonzero R_{SS} ($\lambda = 0$, $\gamma = 0$)

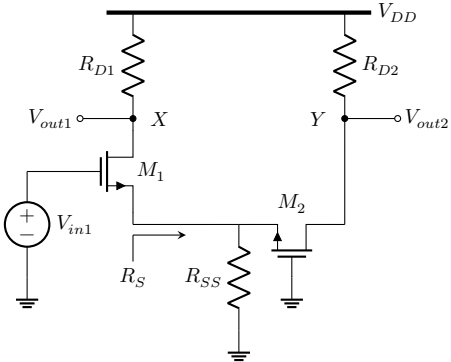

$$R_S = \frac{1}{g_{m2}} \parallel R_{SS} \qquad (14)$$

Nonzero R_{SS} ($\lambda = 0$, $\gamma = 0$)

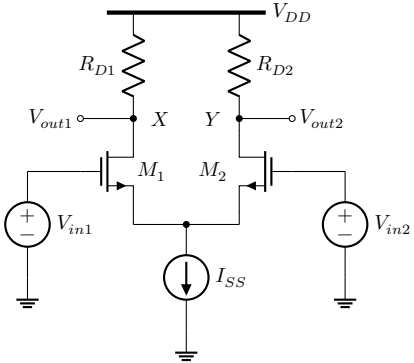

$$V_{out1} = -\frac{R_D}{\frac{1}{g_{m1}} + \left(\frac{1}{g_{m2}} \parallel R_{SS}\right)} V_{in1} \quad (15)$$

Nonzero R_{SS} ($\lambda = 0$, $\gamma = 0$)

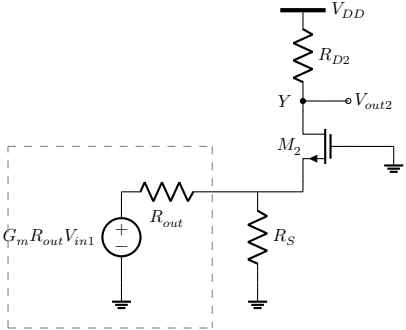

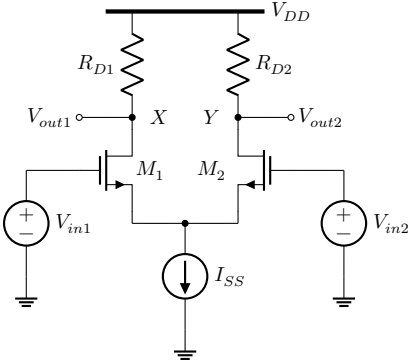

$$G_m = g_{m1} \tag{16}$$

$$R_{out} = \frac{1}{g_{m1}} \tag{17}$$

$$V_{out2} = -\frac{\frac{R_{SS}}{R_{SS}+\frac{1}{g_{m2}}} R_D}{\frac{1}{g_{m1}} + \left(\frac{1}{g_{m2}} \parallel R_{SS}\right)} V_{in1} \tag{18}$$

Nonzero R_{ss}

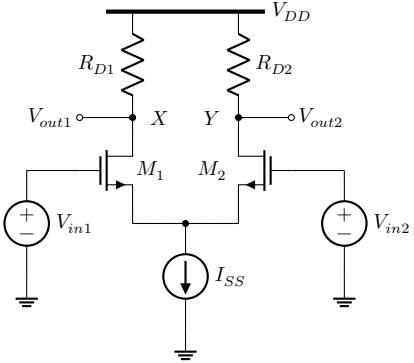

$$V_{out1} - V_{out2} = -\frac{(g_{m1} + 2R_{SS}g_{m1}g_{m2})R_D}{1 + (g_{m1} + g_{m2})R_{SS}} V_{in1} \quad (19)$$

$$= -g_m R_D V_{in1} \quad (20)$$

$$V_{out1} - V_{out2} = -\frac{(g_{m1} + 2R_{SS}g_{m1}g_{m2})R_D}{1 + (g_{m1} + g_{m2})R_{SS}} V_{in1} \quad (21)$$

$$= -g_m R_D V_{in2} \quad (22)$$

Nonzero R_{SS}

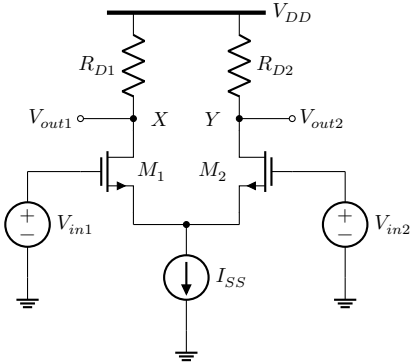

$$A_{DM} = \frac{V_{out1} - V_{out2}}{V_{in1} - V_{in2}} = -g_m R_D \qquad (23)$$

A_{DM} with MOS Loads ($\lambda \neq 0$, $\gamma \neq 0$)

Higher A_{DM}

- $\rightarrow$ Smaller $(W/L)_P$
- $\rightarrow$ Larger $(V_{SGP}–V_{THP})$
- $\rightarrow$ Smaller $V_{in,CM}$ headroom

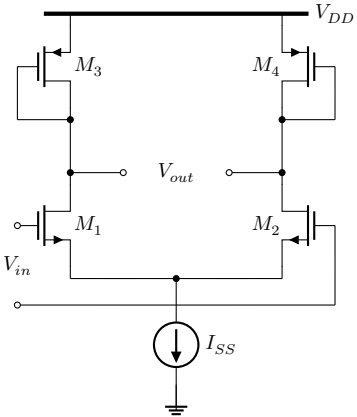

A_{DM} with MOS Loads ($\lambda \neq 0$, $\gamma \neq 0$)

$$V_{out1} = -g_{mN}(r_{oN} \parallel r_{oP} \parallel \frac{1}{g_{mP}})\frac{v_d}{2} \tag{24}$$

$$V_{out2} = -g_{mN}(r_{oN} \parallel r_{oP} \parallel \frac{1}{g_{mP}})(-\frac{v_d}{2}) \tag{25}$$

$$A_{DM} = \frac{V_{out1} - V_{out2}}{v_d} = -g_{mN}\left(r_{oN} \parallel r_{oP} \parallel \frac{1}{g_{mP}}\right) \tag{26}$$

$$\approx -\frac{g_{mN}}{g_{mP}} \approx -\sqrt{\frac{\mu_n (W/L)_N}{\mu_p (W/L)_P}} \tag{27}$$

A_{DM} with MOS Loads ($\lambda \neq 0$, $\gamma \neq 0$)

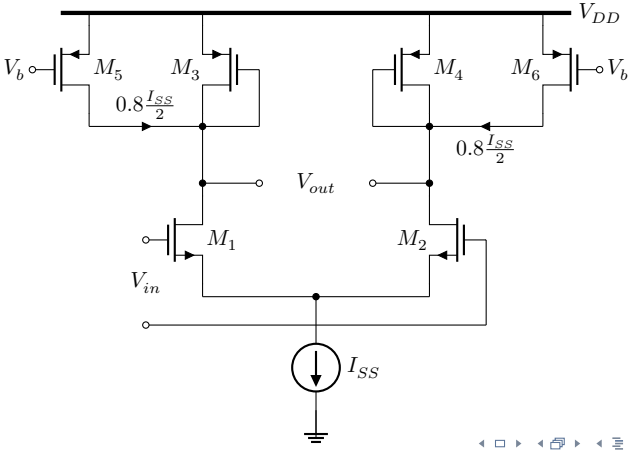

A_{DM} with MOS Loads

$$V_{out1} = -g_{m1,2}\left(r_{o1,2} \parallel r_{o3,4} \parallel \frac{1}{g_{m3,4}} \parallel r_{o5,6}\right)\frac{v_d}{2} \tag{28}$$

$$V_{out2} = -g_{m1,2}\left(r_{o1,2} \parallel r_{o3,4} \parallel \frac{1}{g_{m3,4}} \parallel r_{o5,6}\right)(-\frac{v_d}{2}) \tag{29}$$

$$A_{DM} = \frac{V_{out1} - V_{out2}}{v_d} \approx -\frac{g_{m1,2}}{g_{m3,4}} \approx -\sqrt{\frac{5\mu_n(W/L)_{1,2}}{\mu_p(W/L)_{3,4}}} \tag{30}$$

A_{DM} with MOS Loads ($\lambda \neq 0$, $\gamma \neq 0$)

$$V_{out1} = -g_{m1,2}(r_{o1,2} \parallel r_{o3,4})\frac{v_d}{2} \quad (31)$$

$$V_{out2} = -g_{m1,2}(r_{o1,2} \parallel r_{o3,4})(-\frac{v_d}{2}) \quad (32)$$

$$A_{DM} = \frac{V_{out1} - V_{out2}}{v_d} \quad (33)$$

$$= -g_{m1,2}(r_{o1,2} \parallel r_{o3,4}) \quad (34)$$

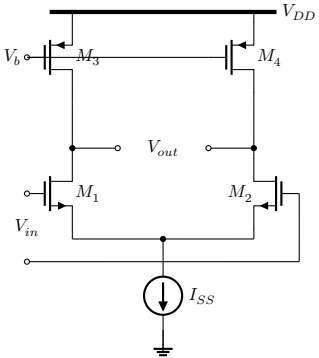

A_{DM} with MOS Loads ($\lambda \neq 0$, $\gamma \neq 0$)

Higher R_{out}
$\rightarrow$ High A_{DM}
$\rightarrow$ Small $V_{in,CM}$ headroom
Telescopic cascode

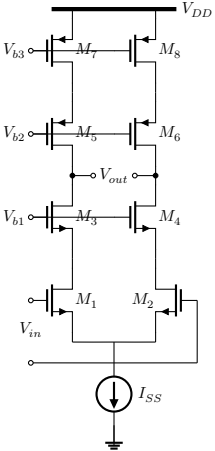

A_{DM} with MOS Loads ($\lambda \neq 0$, $\gamma \neq 0$)

$$V_{out1} \cong -g_{m1,2}\left\{[r_{o1,2} + r_{o3,4} + (g_{m3,4} + g_{mb3,4})r_{o3,4}r_{o1,2}] \parallel [r_{o7,8} + r_{o5,6} + (g_{m5,6} + g_{mb5,6})r_{o5,6}r_{o7,8}]\right\}\frac{v_d}{2} \tag{35}$$

$$V_{out2} \cong -g_{m1,2}\left\{[r_{o1,2} + r_{o3,4} + (g_{m3,4} + g_{mb3,4})r_{o3,4}r_{o1,2}] \parallel [r_{o7,8} + r_{o5,6} + (g_{m5,6} + g_{mb5,6})r_{o5,6}r_{o7,8}]\right\}(-\frac{v_d}{2}) \tag{36}$$

$$A_{DM} = \frac{V_{out1} - V_{out2}}{v_d} \cong -g_{m1,2}[(g_{m3,4} + gmb_{3,4})r_{o3,4}r_{o1,2} \parallel (g_{m5,6} + g_{mb5,6})r_{o5,6}r_{o7,8}] \tag{37}$$

A_{DM} with MOS Loads

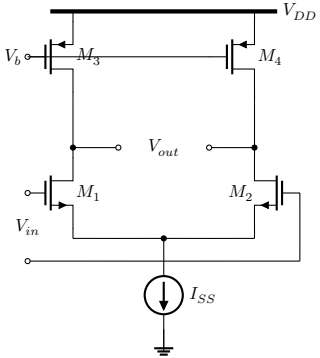

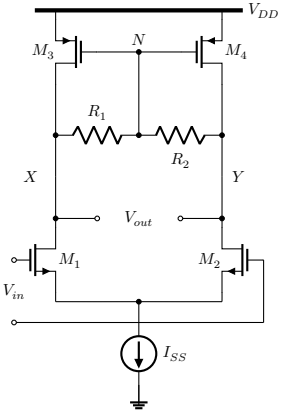

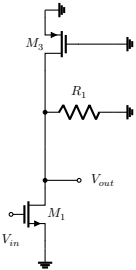

$$A_v = g_{mN} \parallel (r_{ON} r_{OP}) \quad (38)$$

$$| A_v | = g_{m1}(r_{O1} = \parallel R_1 \parallel r_{O3}) \quad (39)$$

Current Defined by Resistors

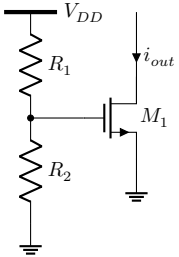

- I_{out} loosely defined.

If $\lambda = 0$

$$\mathrm{I_{out}} = \frac{1}{2}\mu_{\mathrm{n}}\mathrm{C_{ox}}\frac{\mathrm{W}}{\mathrm{L}}\left(\frac{\mathrm{R_2}}{\mathrm{R_1}+\mathrm{R_2}}\ \mathrm{V_{DD}} - \mathrm{V_{TH1}}\right)^2 \tag{40}$$

Variations by temperature: $\mu_{\mathrm{n}}, \mathrm{V_{TH1}}$
Variations by process: $\frac{\mathrm{R_2}}{\mathrm{R_1}+\mathrm{R_2}}, \mathrm{V_{TH1}}$

Current Mirror

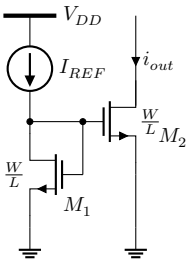

$$I_{out} = \frac{(W/L)_2}{(W/L)_1} I_{REF} \tag{41}$$

- μ_n and V_{TH} still vary with temperature, but are canceled out in ratio
- I_{out} precisely defined.

If $\lambda = 0$

$$\begin{aligned} I_{REF} &= \frac{1}{2}\mu_n C_{ox}\left(\frac{W}{L}\right)_1 (V_A - V_{TH1})^2 \\ I_{out} &= \frac{1}{2}\mu_n C_{ox}\left(\frac{W}{L}\right)_2 (V_A - V_{TH2})^2 \end{aligned} \tag{42}$$

$TH1, TH2$: Almost identical if two transistors are drawn close to each other in layout.

Current Mirror Examples

Calculate I_{out} in terms of I_{REF}

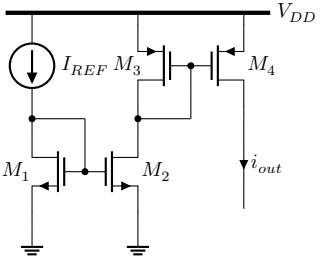

$$I_{out} = \frac{(W/L)_2}{(W/L)_1}\frac{(W/L)_4}{(W/L)_3}I_{REF} \tag{43}$$

- DC or small-signal current amplification or reduction can be achieved if transistors are properly ratioed.

DC Amplification by Current Mirror

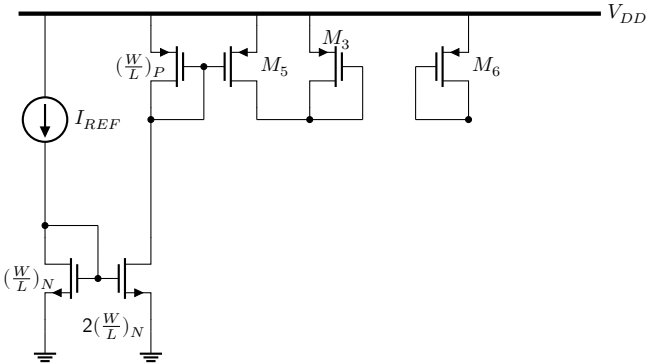

$$A_{\text{DM}} = \frac{v_{\text{out 1}} - v_{\text{out 2}}}{v_{\text{d}}} \approx -\frac{gm_{1,2}}{gm_{3,4}} \approx -\sqrt{\frac{5\mu_n (W/L)_{1,2}}{\mu_p (W/L)_{3,4}}} \tag{44}$$

Amplification by Current Mirror

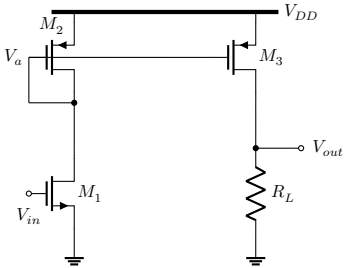

$$v_a = -v_{\text{in}}\, gm_1(r_{o1} \parallel r_{o2} \parallel \frac{1}{gm_2}) \quad (45)$$

$$v_{\text{out}} = -v_a gm_3(R_L \parallel r_{o3}) \quad (46)$$

$$\frac{v_{\text{out}}}{v_{\text{in}}} = gm_1(r_{o1} \parallel r_{o2} \parallel \frac{1}{gm_2}) gm_3(R_L \parallel r_{o3}) \quad (47)$$

If $\lambda = \gamma = 0$

$$\frac{v_{\text{out}}}{v_{\text{in}}} = gm_1 \frac{gm_3}{gm_2} R_L = gm_1 \frac{(W/L)_3}{(W/L)_2} R_L \quad (48)$$

Differential Pair with Current Mirror

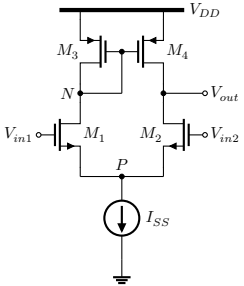

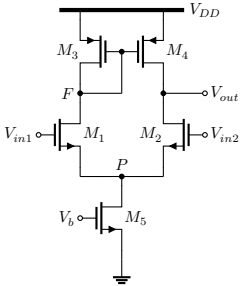

- V_{in} increases
- I_{D1}, I_{D3}, I_{D4} increases
- I_{D2} decreases
- V_{out} increases

- $V_{in1} > V_F + V_{TH1} \rightarrow M_1$ enters into triode
- For M_2 in saturation, $V_{out} \geq V_{in,CM} - V_{TH2}$

Differential Pair with Active Load

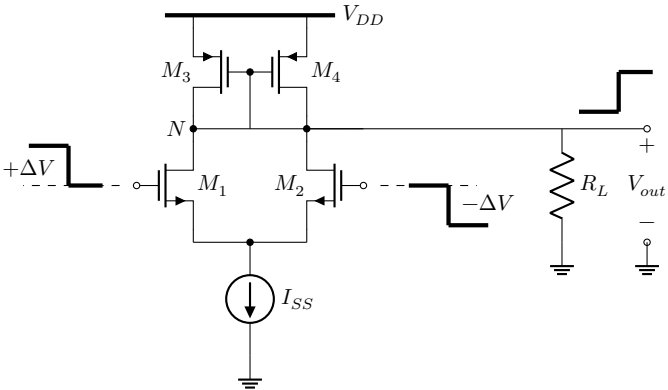

Asymmetric Differential Pair

Why N is not on the right branch?
Caveat: Because of the vastly different resistance magnitude at the drains of M_1 and M_2, the voltage swings at these two nodes are different and therefore node P cannot be viewed as a virtual ground when $V_{in2} = -V_{in1}$.

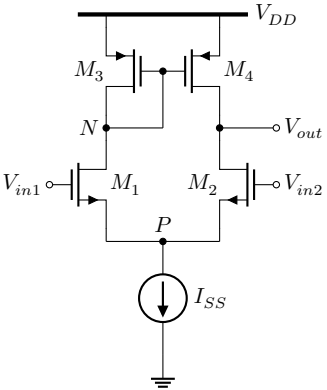

Lecture 19

EECS 311 Analog Circuits

Xuyang Lu

2023 Fall

上海交通大學
SHANGHAI JIAO TONG UNIVERSITY

Recap of Last Lecture

- Differential Amplifier (Half circuit method)
  1. Current Equation method
  2. Superposition method
  3. Half circuit method
- More on differential amplifier topologies
- Current mirror

Topics to Be Covered

- Differential amplifier topologies
- Frequency Response

Course Outline

- Frequency Response (L19, L20, L21, L22)
  Frequency Response will be another emphasis
  1. Transfer function and bode plot
  2. Estimation of transfer function of simple amplifiers
- Design Examples (Not going to be the focus of the exam, tentative)
  1. Revisit of Biasing (L23)
  2. Amplifier Design Examples (L24)
  3. VLSI Primer (Circuit and Programming) (L24)
- Course Review (L25, L26)

Current Mirror

Asymmetric Differential Pair

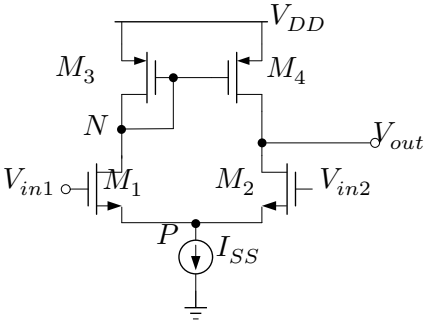

Why N is not on the right branch?

- Caveat: Because of the vastly different resistance magnitude at the drains of M_1 and M_2, the voltage swings at these two nodes are different and therefore node P cannot be viewed as a virtual ground when $V_{in2} = -V_{in1}$.

Differential Pair with Current Mirror

- Small-signal Analysis, Half-Circuit Method, Differential-Mode

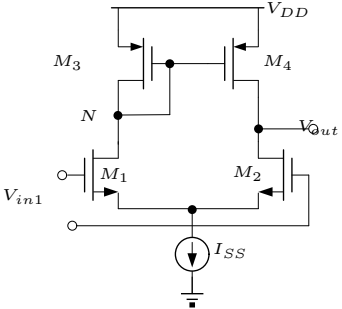

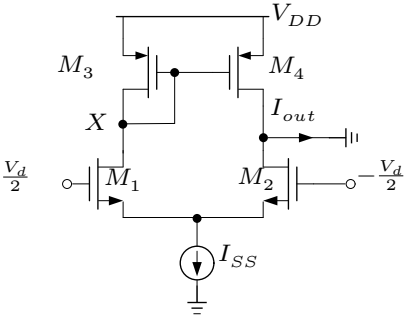

- Almost fully symmetric, we can still approximate

Differential Pair with Current Mirror

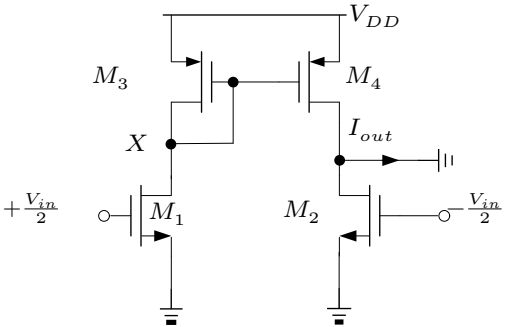

$$R_{in} = \frac{1}{g_{m3}} \parallel r_{o3} \quad \text{(small)} \tag{1}$$

$$i_{out} = g_{m1,2}\left(\frac{u_d}{2}\right) \times 2 \tag{2}$$

$$G_m = g_{m1,2} \tag{3}$$

Differential Pair with Current Mirror

Small-signal Analysis

Half-circuit method

Differential-Mode

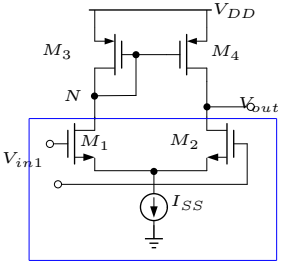

Fully Symmetric

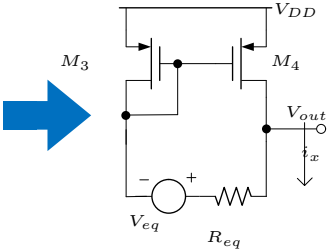

Differential Pair with Current Mirror

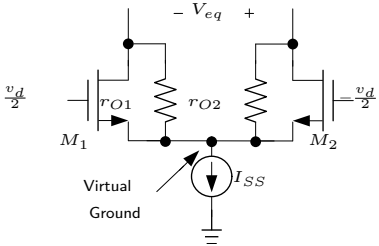

$$i_X = \frac{V_{out} - V_{eq}}{R_{eq} + \left(\frac{1}{g_{m3,4}} \parallel r_{o3,4}\right)} \tag{4}$$

$$2i_X + \frac{V_{out}}{r_{o3,4}} = 0 \tag{5}$$

$$A_v = \frac{V_{out}}{V_{in}} \approx g_{m1,2}(r_{o2} \parallel r_{o4}) \tag{6}$$

Differential Pair with Current Mirror

Small-signal Analysis

Half-circuit method

Differential-Mode

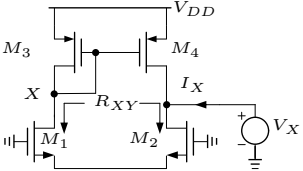

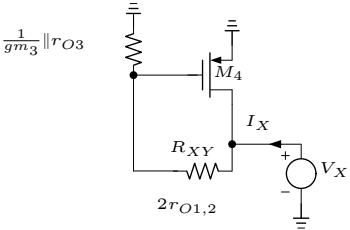

$$R_{out} \approx r_{o2} \parallel r_{o4} \tag{7}$$

$$I_X = \frac{V_X}{2r_{o1,2} + \frac{1}{g_{m3}} \parallel r_{o3}} \left[1 + \left(\frac{1}{g_{m3}} \parallel r_{O3}\right) g_{m4}\right] + \frac{V_X}{r_{o4}} \tag{8}$$

$$A_v = G_m R_{out} \approx g_{m1,2}(r_{o2} \parallel r_{o4}) \tag{9}$$

Differential Pair with Current Mirror

Small-signal Analysis

Common-Mode

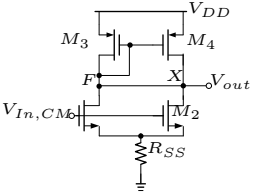

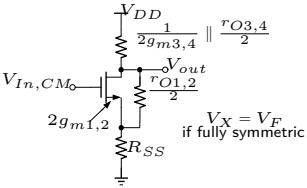

$$A_{CM} = \frac{-\left(2g_{m1,2}\right)\left(\frac{r_{o1,2}}{2}\right)\left(\frac{1}{2g_{m3,4}} \parallel \frac{r_{o3,4}}{2}\right)}{R_{SS} + \left(\frac{r_{o1,2}}{2}\right) + \left(2g_{m1,2} + 2g_{mb1,2}\right)\left(\frac{r_{o1,2}}{2}\right)R_{SS} + \left(\frac{1}{2g_{m3,4}} \parallel \frac{r_{o3,4}}{2}\right)} \approx \frac{-1}{2g_{m3,4}R_{SS}} \tag{10}$$

$$CMRR = \left| \frac{A_{DM}}{A_{CM}} \right| = g_{m1,2}\left(r_{o2} \parallel r_{o4}\right) 2g_{m3,4}R_{SS} \quad \text{(large)} \tag{11}$$

Simple Op-amp Topologies

Calculate the input voltage range and the closed-loop output impedance. Each transistor has a threshold voltage 0.7 V and an overdrive 0.3 V.

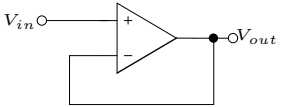

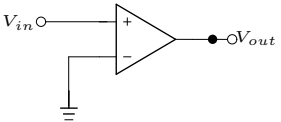

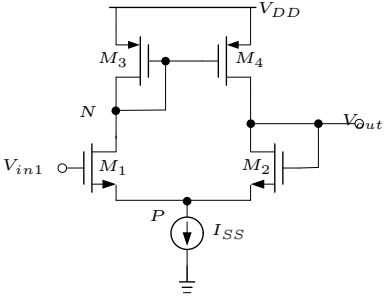

Simple Op-amp Topologies

If each device (including the current source) has a threshold voltage of 0.7 V and an overdrive of 0.3 V

$$\frac{v_{out}}{v_{in,open}} = g_{mN}(r_{oN} \parallel r_{oP}) \quad (12)$$

$$R_{out,open} = (r_{oN} \parallel r_{oP}) \quad (13)$$

$$V_{in,min} = 0.3V + (0.3V + 0.7V) \quad (14)$$

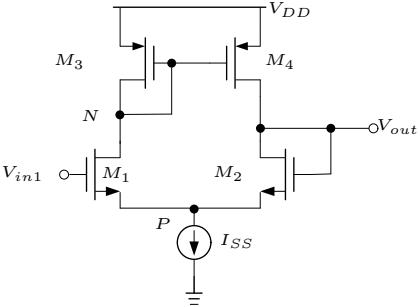

Simple Op-amp Topologies

$$V_{in,max} = V_{DD} - \mid V_{GS3} \mid + V_{TH1} \tag{15}$$

- When M_1 is in triode.

$$V_{in.max} = V_{DD} - (0.3V + 0.7V) + 0.7V \tag{16}$$

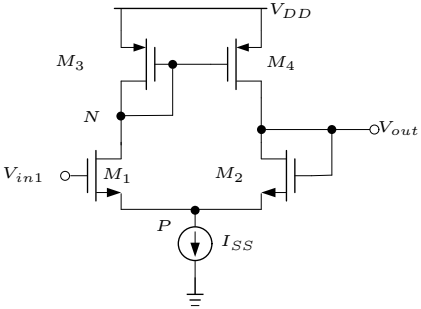

Simple Op-amp Topologies

$$\frac{v_{out}}{v_{in}}_{closed} = \frac{g_{mN}\left(r_{oN} \parallel r_{oP}\right)}{1 + g_{mN}\left(r_{oN} \parallel r_{oP}\right)} \tag{17}$$

$$R_{\text{out,close}} = \frac{\left(r_{ON} \parallel r_{OP}\right)}{1 + g_{mN}\left(r_{ON} \parallel r_{OP}\right)} \approx \frac{1}{g_{mN}} \tag{18}$$

- The closed-loop output impedance is relatively independent of the open-loop output impedance. Allowing the design high-gain op amps by increasing the open-loop output impedance while still achieving a relatively low closed-loop output impedance

Telescopic Cascode

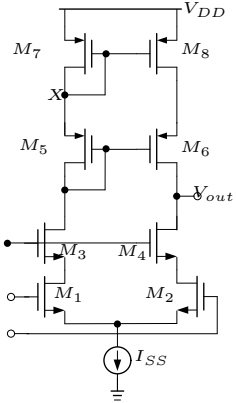

$$A_{\text{DM,open}} = \frac{v_{\text{out}}}{v_{\text{in1}} - v_{\text{in2}}} \approx g_{mN}\left(g_{mN} r_{oN} \parallel g_{mP} r_{oP}\right) \tag{19}$$

- Higher gain at the cost of voltage headroom

$$V_b - V_{TH4} \leq V_{\text{out}} \leq V_{DD} - V_{SG7} - V_{SG5} + V_{TH6} \tag{20}$$

$$V_{b,min} = V_{SS} + V_{ov2} + V_{GS4} \tag{21}$$

Telescopic Cascode

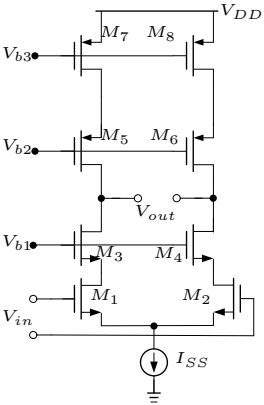

$$A_{\text{DM,open}} = \frac{v_{\text{out}} v_{\text{out1}} - v_{\text{out2}}}{v_{\text{in1}} - v_{\text{in2}}} \tag{22}$$

$$\approx g_{mN} \left(g_{mN} r_{oN} r_{oN} \parallel g_{mP} r_{oP} r_{oP} \right) \tag{23}$$

- Higher gain at the cost of voltage headroom
- Double output swing compared to single-ended

$$V_{b1} - V_{TH3,4} \leq V_{\text{out }1,2} \leq V_{b3} + V_{TH5,6} \tag{24}$$

Example

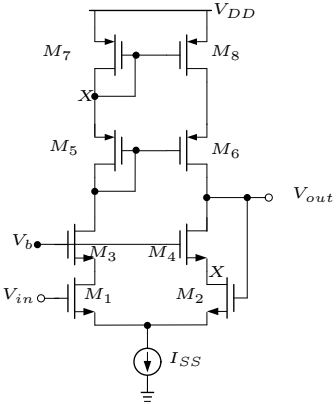

Due to feedback, $V_{out} \approx V_{in}$.

- Calculate the input voltage range.
- For M_4 in saturation, $V_{\text{out}} \geq V_b - V_{TH4}$
- For M_2 in saturation, $V_X = V_b - V_{GS4} \geq V_{\text{out}} - V_{TH2}$
- Input voltage range: $V_b - (V_{GS4} -$
- $V_{TH2}) \geq V_{\text{out}} \geq V_b - V_{TH4}$
- $(V_{GS4} - V_{TH2}) \leq V_{TH4}$
- $(V_{GS4} - V_{TH4}) \leq V_{TH2}$
- Make M_4 overdrive as small as possible to maximize the available range.

Folded Cascode

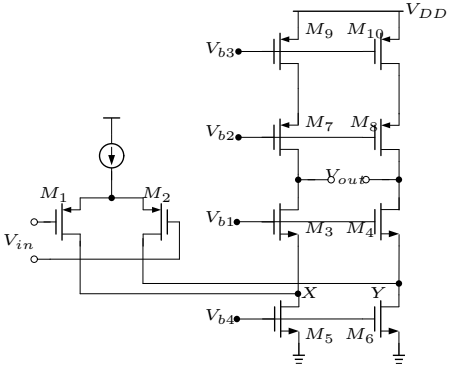

Fully symmetric
Fully differential

Half-circuit Method

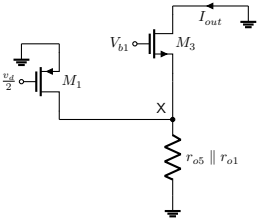

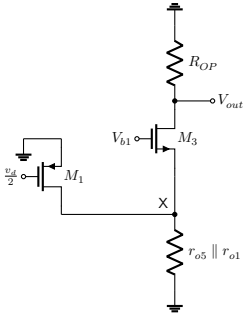

Folded Cascode

$$V_{b1} - V_{TH3,4} \leq V_{out1,2} \leq V_{b2} + V_{TH7,8}$$

- $G_m = \frac{i_{\text{out}}}{v_d/2} \approx -gm_1$
- $V_{b1} - V_{TH3,4} \leq V_{out1,2} \leq V_{b2} + V_{TH7,8}$
- $V_{b2,\max} = V_{DD} - V_{ov9,10} - V_{SG7,8}$
- $V_{b1,\min} = V_{ov5,6} + V_{GS3,4}$

Folded Cascode

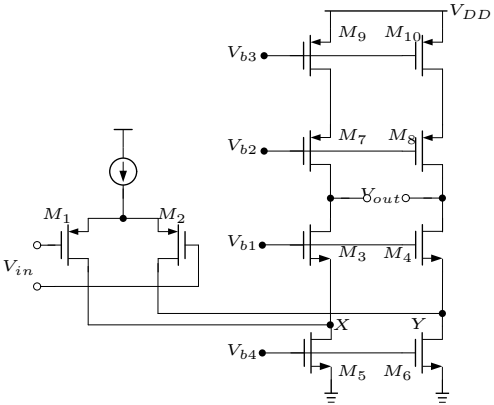

Folded Cascode

$$G_m R_{out} = \frac{v_{out1}}{v_d/2} \tag{25}$$

$$\approx -g_{m1}\left[\left(g_{m3}+g_{mb3}\right) r_{o3}\left(r_{o5} \parallel r_{o1}\right)\right] \parallel \left[\left(g_{m7}+g_{mb7}\right) r_{o7} r_{o9}\right] \tag{26}$$

$$A_{DM} = \frac{v_{out1} - v_{out2}}{v_d} \tag{27}$$

$$\approx -g_{m1,2}\left[\left(g_{m3,4}+g_{m3,4}\right) r_{o3,4}\left(r_{o,6,6} \parallel r_{o1,2}\right)\right] \parallel \left[\left(g_{m7,8}+g_{mb7,8}\right) r_{o7,8} r_{o,10}\right] \tag{28}$$

Implementation #1

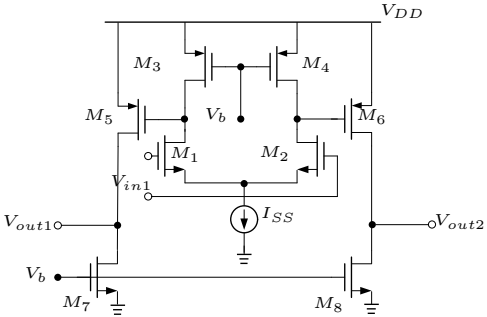

Implementation #1

$$A_{DM} = \frac{v_{out1} - v_{out2}}{v_{in1} - v_{in2}} = \frac{v_{out1} - v_{out2}}{v_d} \tag{29}$$

$$= g_{m1,2}\left(r_{o1,2} \parallel r_{o3,4}\right) \times g_{m5,6}\left(r_{o5,6} \parallel r_{o7,8}\right) \tag{30}$$

$$V_b - V_{TH7,8} \leq V_{out1,2} \leq V_{DD} - V_{ov5,6} \tag{31}$$

Implementation #2

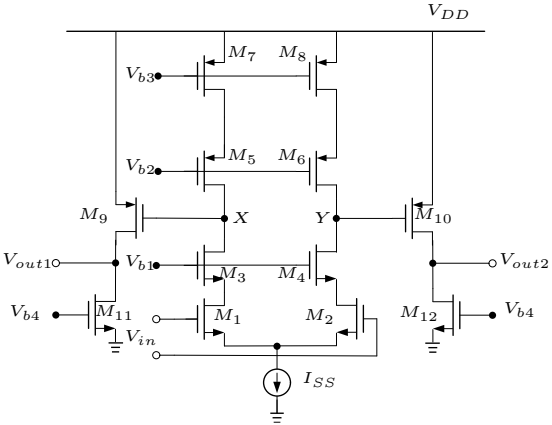

Implementation #2

$$
\begin{aligned}
A_{DM} &= \frac{v_{out1} - v_{out2}}{v_{in1} - v_{in2}} = \frac{v_{out1} - v_{out2}}{v_d} \\
&\cong \left\{ g_{m1,2} \left[\left(g_{m3,4} + g_{mb3,4} \right) r_{o3,4} r_{o1,2} \right] \parallel \left[\left(g_{m5,6} + g_{mb5,6} \right) r_{o5,6} r_{o7,8} \right] \right\} \\
&\times g_{m9,10} \left(r_{o9,10} \parallel r_{o11,12} \right)
\end{aligned} \tag{32}
$$

$$
V_{ov11,12} \leq V_{out1,2} \leq V_{DD} - V_{ov9,10} \tag{33}
$$

Implementation #3

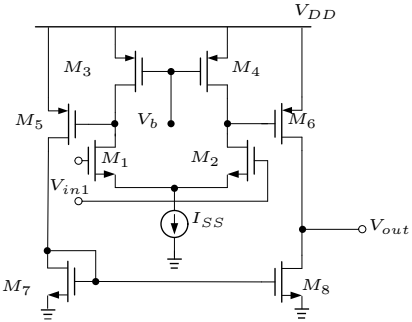

Implementation #3

$$
\begin{aligned}
A_{\text{DM}} &= \frac{v_{\text{out}}}{v_{\text{in1}} - v_{\text{in2}}} \\
&= -g_{m1,2}\left(r_{o1,2} \parallel r_{o3,4}\right) \times g_{m5,6}\left(r_{o5,6} \parallel r_{o7,8}\right)
\end{aligned} \tag{34}
$$

$$
V_{\text{ov8}} \leq V_{\text{out}} \leq V_{\text{DD}} - V_{\text{ov6}} \tag{35}
$$

OPA Layout

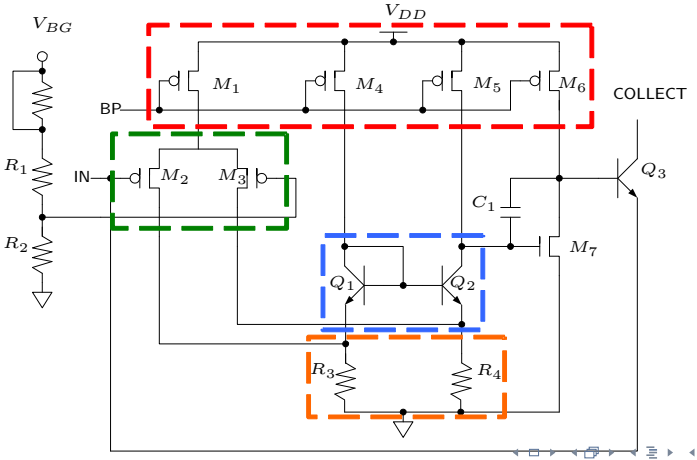

OPA Layout

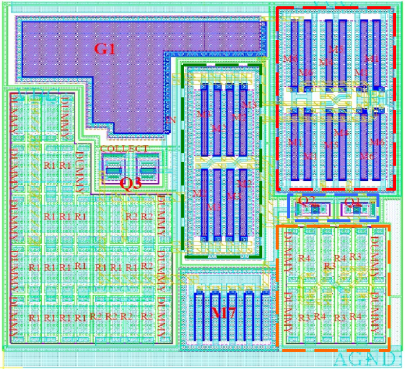

OPA Layout

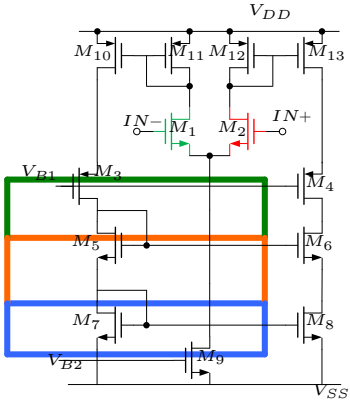

Schematic

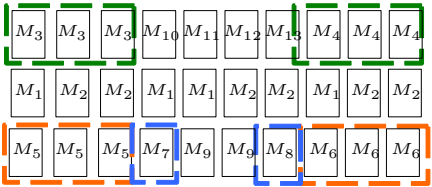

Floor Plan

Time and Frequency Domain

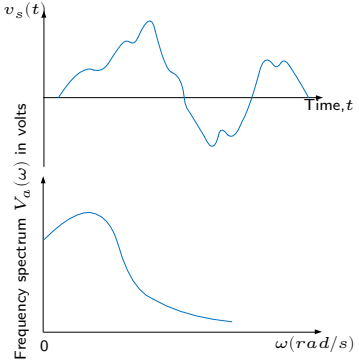

- Most signals of interest are time- varying (AC) signals, meaning their values change over time, such as an acoustic signals.
- For example, a voltage waveform as a function of time is shown to the right.

Time and Frequency Domain

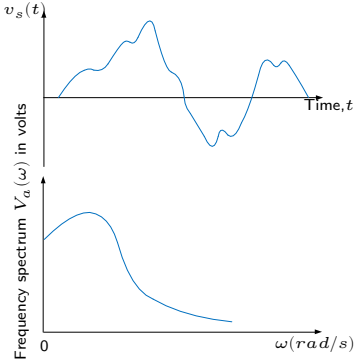

- These AC signals consist of different frequency components. We often need to analyze and manipulate signals to control what frequency components should be processed (amplified, filtered, digitized, etc.).
- Therefore, we often need to switch between time and frequency domains, and need to convert signals from one domain to the other.

Circuit Input-Output Relationships

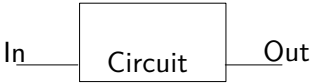

- We are interested in understanding how a circuit behaves in response to a specific type of signal. In so doing, we can also design circuits to deliver a specific behavior.
- There are several different kinds of responses we are interested in, and different ways that we can analyze these responses.

Time Domain $\Longleftrightarrow$ Frequency Domain

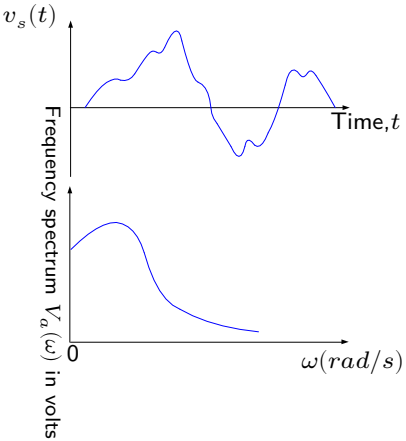

- Use Fourier and Laplace transform to convert signals between the two domains.
- Remember that any signal v(t) can be considered as a superposition (sum) of a number of sinusoids at given frequency.
- So we can analyze the response of a circuit to a sinusoid of a given frequency, and then obtain the complete response of a circuit to a signal v(t) by adding up all of the individual sinusoidal responses at frequency components that are contained within v(t).

Time Domain $\Longleftrightarrow$ Frequency Domain

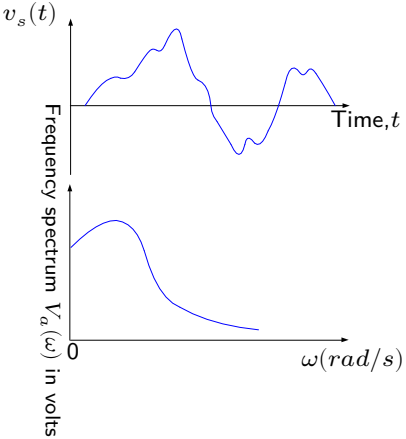

- So we need to be able to switch between time and frequency domains.
- In addition, it is much easier to analyze circuits containing energy soring components, such as L/C, in the frequency domain since we do not heed to solve complicated differential equations.

Use s-domain to Get Time Response

- Figure stuff out in the s-domain (frequency domain) $f(t) \Longleftrightarrow F(s)$
  ....Then go back to time domain

Time domain

$$L^{-1}\{F(s)\} = \frac{1}{2\pi}\int_{c-i\infty}^{c+i\infty} e^{ft}F(s)ds = f(t)$$

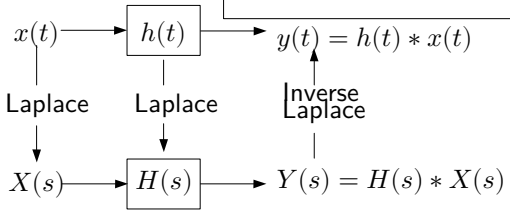

Frequency domain

$$L\{f\}(s) = \int_0^\infty f(t)e^{-st}dt$$

Example: Step Unit Function

Time- and Frequency Responses

- Analyze the circuit, which includes reactive components (L/C), in the frequency (s-domain).

$$H(s)=Y(s)/X(s)$$

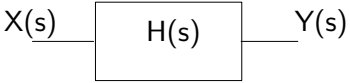

- Then revert back to the time domain, or continue to analyze in the s-domain to find the transfer function in the s-domain in response to a specific input X(s), and then use inverse transform to find the time domain response.
- Note that finding the time domain response to inputs like a step function is analytically difficult when circuits get complicated.
- But things get a lot easier in ther frequency s-domain as we will see.

Capacitors and Inductors

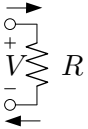

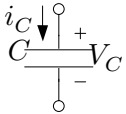

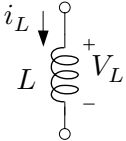

Time-Domain Frequency-Domain

Capacitors and Inductors

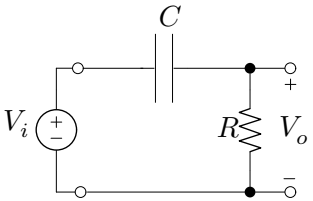

$$V_o = H(s)V_i(s) \tag{36}$$

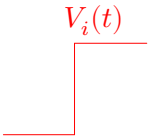

$$V(s) = \frac{sRC}{1 + sRC} \tag{37}$$

What would be the output?

Pole

- $A_v = \frac{1}{1+sRC}$
- $\omega_p = -\frac{1}{RC}$
  What happens at the poles?
- $A_v\left(w_p\right) = \frac{1}{1+j\omega_p CR}$
- $A_v\left(w_p\right) = \frac{1}{1+j\frac{1}{CR}CR} = \frac{1}{1+j}$
- $\mid A_v\left(w_p\right) \mid = \mid \frac{1}{1+j} \mid = \frac{1}{\sqrt{2}}$
- Gains drops by $\sqrt{2}$

Pole

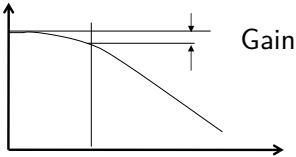

Gains drops by 3dB at ωp

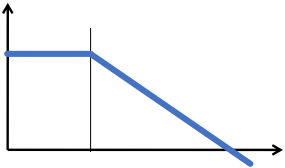

Useful Relationship

- Another important Laplace transform

$$\frac{K}{(s+\alpha)(s+\beta)} \Leftrightarrow \frac{K}{(\beta-\alpha)}\left(e^{-\alpha t}-e^{-\beta t}\right)u(t) \tag{38}$$

- For example

$$\frac{V_{\text{out}}}{V_{\text{in}}} = \frac{s}{\left(1+\frac{s}{10^3}\right)\left(1+\frac{s}{10^4}\right)} \tag{39}$$

- $v_{\text{out}}(t) = \frac{10^7}{10^4-10^3}\left(e^{-1000t}-e^{-10000t}\right)u(t)$

Frequency Response of Circuits

Clearly capacitors and inductors influence the time response of circuits, and they clearly influence the frequency response as well. As we just saw time-domain and frequency-domain responses are related. The transfer function of a linear dynamic circuit can be described using a generalized system function

$$H(s) = H_0 \frac{\prod_z (s - s_z)}{\prod_p (s - s_p)} = H_0' \frac{\prod_z (\tau_z s - 1)}{\prod_p (\tau_p s - 1)} \tag{40}$$

$$s_z = \frac{1}{\tau_z} \rightarrow \text{ zero at } s_z = \sigma_z + j\omega_z; \sigma_z = \mathrm{Re}\left(s_z\right), \omega_z = \mathrm{lm}\left(s_z\right) \tag{41}$$

$$s_p = \frac{1}{\tau_p} \rightarrow \text{ pole at } s_p = \sigma_p + j\omega_p; \sigma_p = \mathrm{Re}\left(s_p\right), \omega_p = \mathrm{Im}\left(s_p\right) \tag{42}$$

Frequency Response of Circuits

Because the zeros are the roots of the numerator polynomial,

$$|H(s_z)| = 0 \tag{43}$$

the poles are the roots of the denominator polynomial

$$|H(s_p)| = \infty \tag{44}$$

In physical systems singularities with

$$\mathrm{Im}(s) \neq 0 \tag{45}$$

always occur in complex conjugate pairs:

$$\mathrm{Re}(s_1) = \mathrm{Re}(s_2) \tag{46}$$

$$\mathrm{Im}(s_1) = -\mathrm{lm}(s_2). \tag{47}$$

Frequency Response of Circuits

It is of course possible to mathematically find the magnitude and angle of transfer function, but this could be complicated when there are multiple zeros and poles. Instead, we use complex plane and bode plot.
All Singularities (i.e., poles and zeros) are represented by positions in the complex plane, by vectors drawn from the point of interest in frequency domain to these poles and zeros.

- $G_{(s)} = \frac{s+2}{s^2+5s}$
- Zeros at $s = -2$, poles at $s = 0$ and $s = -5$.

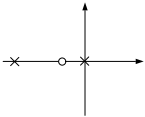

Representation of Poles and Zeros

- A system has a pair of complex conjugate poles $p_1, p_2 = -1 \pm j2$, a single real zero $z_1 = -4$, and a gain factor $K = 3$. Find the differential equation representing the system. The transfer function is
- The transfer function is

$$\begin{aligned} H(s) &= K\frac{s-z}{(s-p_1)(s-p_2)} \\ &= 3\frac{s-(-4)}{(s-(-1+j2))(s-(-1-j2))} \\ &= 3\frac{(s+4)}{s^2+2s+5} \end{aligned} \tag{48}$$

Representation of Poles and Zeros

$$H(s) = 3\frac{(s+4)}{s^2+2s+5} \qquad (49)$$

and the differential equation is

$$\frac{d^2y}{dt^2} + 2\frac{dy}{dt} + 5y = 3\frac{du}{dt} + 12u \qquad (50)$$

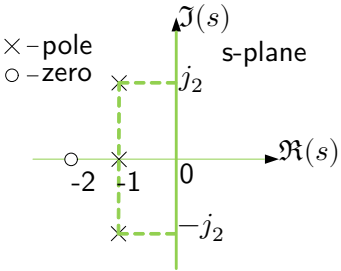

Time Domain vs. Poles and Zeros

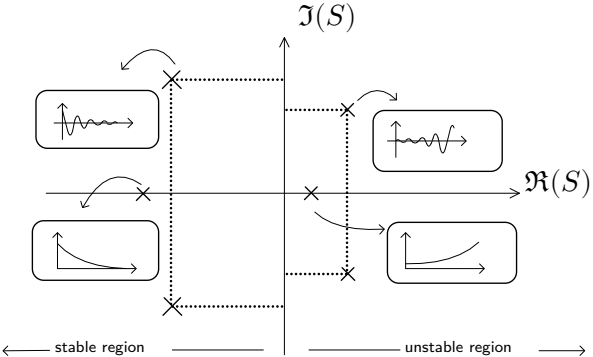

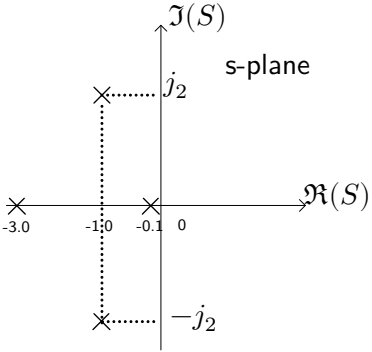

Time Domain vs. Poles and Zeros

$$y_h(t) = C_1 e^{-3t} + C_2 e^{-0.1t} + Ae^{-t}\sin(2t + \phi) \tag{51}$$

decays rapidly decays in approximately 4 seconds. (4τ)

Calculate τ and decays pretty much for 4-5 τ

Representation of Poles and Zeros

$$|H(s)| = K\frac{\prod_{i=1}^{m} |\,(s-z_i)\,|}{\prod_{i=1}^{n} |\,(s-p_i)\,|} \tag{52}$$

$$\angle H(s) = \sum_{i=1}^{m} \angle\,(s-z_i) - \sum_{i=1}^{n} \angle\,(s-p_i) \tag{53}$$

The magnitude of each of the component is the distance of the point s from the pole or zero on the s-plane.

Representation of Poles and Zeros

- if the vector from the pole pi to the point s on a pole-zero plot has a length qi and an angle i from the horizontal, and the vector from the zero zi to the point s has a length ri and an angle ϕ_1
- $|H(s)| = K\frac{r_1 \ldots r_m}{q_1 \ldots q_n}$
- $\angle H(s) = (\phi_1 + \ldots + \phi_m) - (\theta_1 + \ldots + \theta_n)$ The magnitude of the transfer function is proportional to the product of the geometric distances on the s-plane from each zero to the point s divided by the product of the distances from each pole to the point.

Representation of Poles and Zeros

The angle of the transfer function is the sum of the angles of the vectors associated with the zeros minus the sum of the angles of the vectors associated with the poles

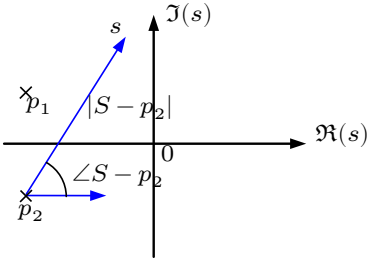

$$|H(s)| = K\frac{r}{q_1 q_2} \qquad (54)$$

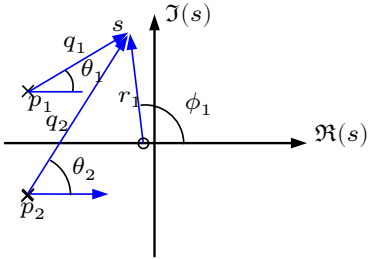

$$\angle H(s) = \phi_1 - \theta_1 - \theta_2 \qquad (55)$$

Representation of Poles and Zeros

- A second-order system has a pair of complex conjugate poles at $s = -2 \pm j3$ and a single zero at the origin of the s-plane. Find the transfer function and use the pole-zero plot to evaluate the transfer function at $s = 0 + j5$.

$$H(s) = K\frac{s}{(s-(-2+j3))(s-(-2-j3))} = K\frac{s}{s^2+4s+13} \tag{56}$$

Lecture 19

EECS 311 Analog Circuits

Xuyang Lu

2023 Fall

上海交通大學
SHANGHAI JIAO TONG UNIVERSITY

Representation of Poles and Zeros

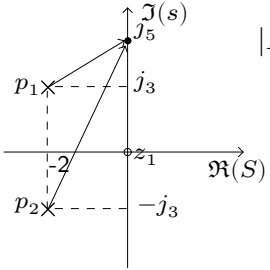

$$|H(s)| = K\frac{\sqrt{(0-5)^2}}{\sqrt{(0-(-2))^2+(5-3)^2}\sqrt{(0+2)^2+(5+3)^2}} = K\frac{5}{4\sqrt{34}} \quad (1)$$

$$\angle H(s) = \tan^{-1}(5/0) - \tan^{-1}(2/2) - \tan^{-1}(8/2) = -31^\circ \quad (2)$$

Frequency Response

y substituting $j\omega$ for s

$$H(j\omega) = K\frac{(j\omega - z_1)(j\omega - z_2)\ldots(j\omega - z_{m-1})(j\omega - z_m)}{(j\omega - p_1)(j\omega - p_2)\ldots(j\omega - p_{n-1})(j\omega - p_n)} \tag{3}$$

$$\mid j\omega - p_i \mid = \sqrt{\sigma_i^2 + (\omega - \omega_i)^2} \tag{4}$$

$$\angle(s - p_i) = \tan^{-1}\left(\frac{\omega - \omega_i}{-\sigma_i}\right) \tag{5}$$

Frequency Response Example

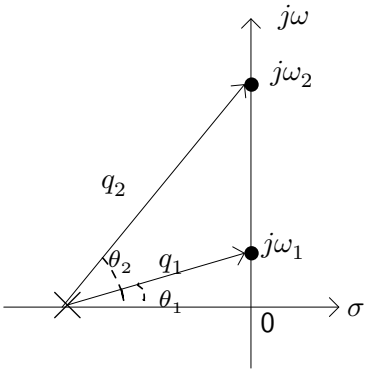

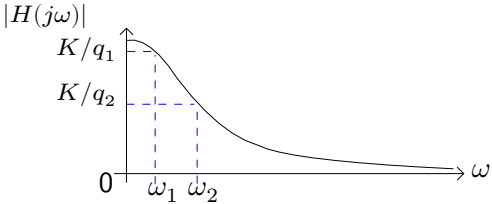

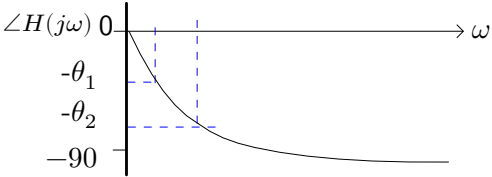

Frequency Response Example

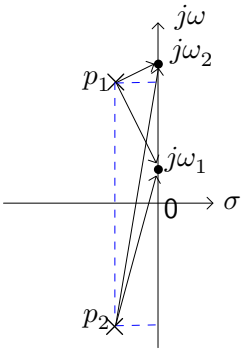

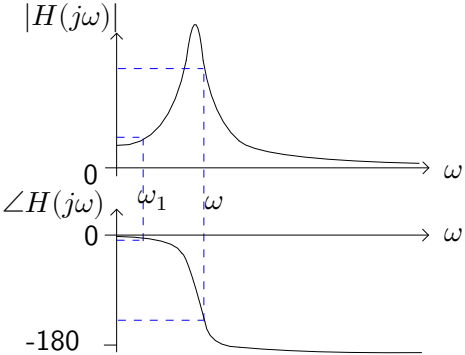

Frequency Response Example

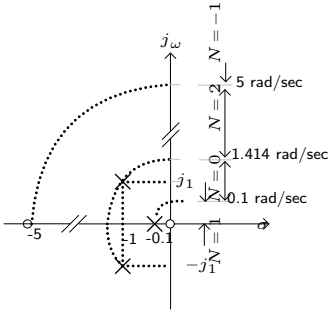

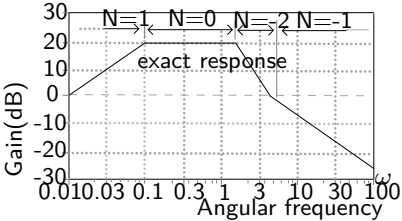

- Each pole or zero contributes a change in the slope of the asymptotic plot of $\pm$ 20 dB/decade above its break frequency. A complex conjugate pole or zero pair gives a total change in the slope of $\pm$ 40 dB/decade.

Constructing Magnitude Bode Plot

- For lefthand plane
  - Slope changes by –20 dB/decade
  - Phase decreases by 90°
- Zero
  - Slope changes by 20 dB/decade
  - Phase increase by 90°

Constructing Magnitude Bode Plot

- $H(s) = \frac{1}{s+1} \Rightarrow H(j\omega) = \frac{1}{j\omega+1}$
- $\angle H(j\omega) = -\tan^{-1}(\omega)$
- $\angle H(j\omega) = \begin{cases} 0^\circ & \omega \ll 1 \\ -90^\circ & \omega \gg 1 \end{cases}$

The behavior for a zero is similar. The phase increases by 90° and passes though the midpoint of 45° at the break point

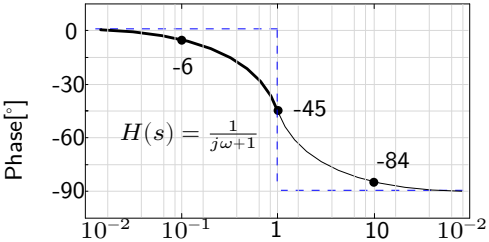

Constructing Magnitude Bode Plot

We can extend the results for simple repeated poles and zeroes as before using the more general function

$$H(s) = (s+a)^{\pm r} \Rightarrow H(j\omega) = (j\omega + a)^{\pm r} \tag{6}$$

$$\angle H(j\omega) = \begin{cases} 0^\circ & \omega \ll a \\ \pm r 90^\circ & \omega \gg a \end{cases} \tag{7}$$

$$\angle H(ja) = \pm r 45^\circ \tag{8}$$

Unstable (right half plane) poles and zeros have opposite behavior

Zero @ Origin

- $H(s) = s$
- $\mid H(j\omega) \mid = \omega \Rightarrow \omega = 1 \Rightarrow \log \mid H(j\omega) \mid = 0dB$
- Slope 20 dB/decade

Pole @ Origin

- $H(s) = \frac{1}{s}$ and $s = j\omega$
- $\angle H(j\omega) = -90^\circ$ Phase always at -90°
- $\mid H(j\omega) \mid = \frac{1}{\omega} \Rightarrow \omega = 1 \Rightarrow \log(1) = 0 \text{ dB}$
- Slope $-20 \text{ dB}/$ decade

Bode Plot Example

- $H(s) = \frac{s}{(1+\frac{s}{10})(1+\frac{s}{10^4})}$

Zero @ 0
Pole @ -10
Pole @ -10^4

Bode Plot Example

$$H(s) = \frac{1000}{s+100} = \frac{10}{1+\frac{s}{100}} \tag{9}$$

$$G_{DC} = 10 = 20\log 10 = 20 \text{ dB} \tag{10}$$

Pole at -100.

Finite Op-amp Bandwidth

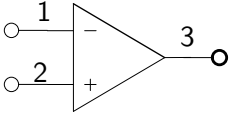

- Remember for a RC circuit
- $V_{\text{out}} = \frac{1}{1+j\omega CR} V_{in}$
- $\omega_p = -\frac{1}{RC} \Rightarrow$
- $Av(\omega) = \frac{1}{1+j\omega/\omega_p}$

- Ideal : Gain is Infinite
- Gain is finite, bandwidth infinite
- Gain is finite, bandwidth finite
- Assume single pole amplifier
- $A0$ is the DC gain,
- $A(j\omega) = \frac{Ao}{1+j\omega/\omega p}$

Finite Op-amp Bandwidth

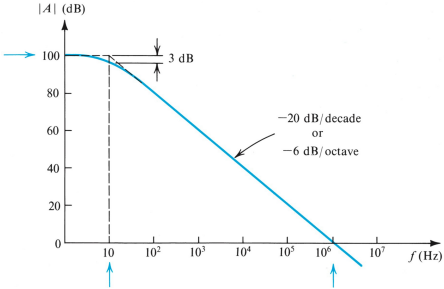

$$A(j\omega) = \frac{A_0}{1 + j\omega/\omega_p} \qquad (11)$$

Typical op-amps have every low 3dB bandwidth

Finite Op-amp Bandwidth

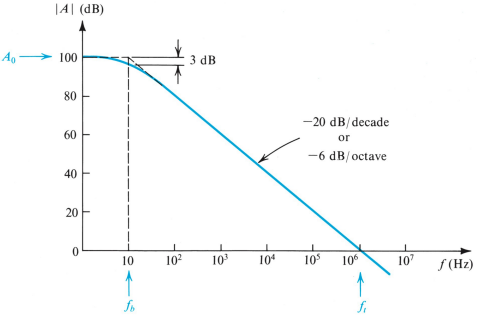

- $\omega_{\mathbf{t}}$ is ω Where $\mid A(j\omega) \mid = 1$
- $A(j\omega) = \frac{A_0}{1+j\omega/\omega_b}$
- $1 = \frac{A_0}{\omega_{T/\omega_b}} \Rightarrow \omega_T = A_0\omega_b$
- $\omega_T = A_0\omega_b$
- Gain bandwidth product (GBW) important parameter

Finite Op-amp Bandwidth

- $\omega_{\mathbf{t}}$ is ω Where $\mid A(j\omega) \mid = 1$
- $A(j\omega) = \frac{A_0}{1+j\omega/\omega_b}$
- $1 = \frac{A_0}{\omega_{T/\omega_b}} \Rightarrow \omega_T = A_0\omega_b$
- $\omega_T = A_0\omega_b$
- Gain bandwidth product (GBW) important parameter

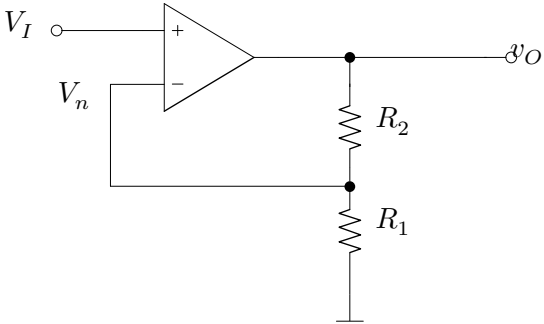

Non-Inverting Amplifier

$$v_O = \frac{A_0}{1 - \frac{s}{\omega_p}} \left(v_I - \beta v_O\right) \qquad (12)$$

$$v_O \left(1 - \frac{s}{\omega_p}\right) + A_0 \beta v_O = A_0 v_I \qquad (13)$$

$$\frac{v_O}{v_I} = \frac{A_0}{1 + \beta A_0 - s/\omega_p} = \frac{A_0}{1 + \beta A_0} \frac{1}{1 - \frac{s}{\omega_p (1 + \beta A_0)}} \qquad (14)$$

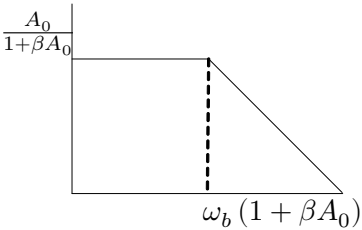

- This tells me the bandwidth of a noninverting amplifier is $\omega_p \left(1 + \beta A_0\right)$

Parasitic Capacitance

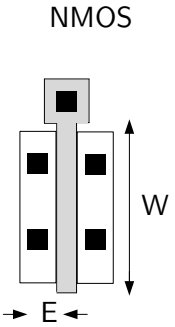

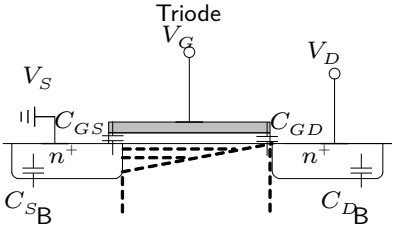

Parasitic Capacitance

$$C_{GS} = W_{ov} + 1/2\,(WLC_{ox}) \quad (15)$$

$$C_{GD} = WC_{ov} + 1/2\,(WLC_{ox}) \quad (16)$$

$$C_{SB} = WEC_j + 2(W+E)C_{jsw} \quad (17)$$

$$C_{DB} = WEC_j + 2(W+E)C_{jsw} \quad (18)$$

Parasitic Capacitance

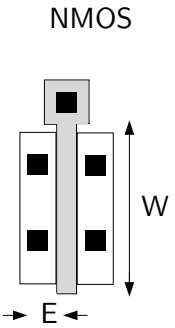

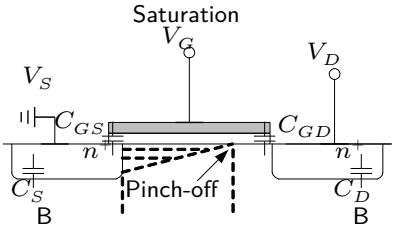

Parasitic Capacitance

$$C_{GS} = WC_{ov} + 2/3\,(WLC_{ox}) \quad (19)$$

$$C_{GD} = WC_{ov} \quad (20)$$

$$C_{SB} = WC_j + 2(W+E)C_{jsw} \quad (21)$$

$$C_{DB} = WEC_j + 2(W+E)C_{jsw} \quad (22)$$

Parasitic Capacitance

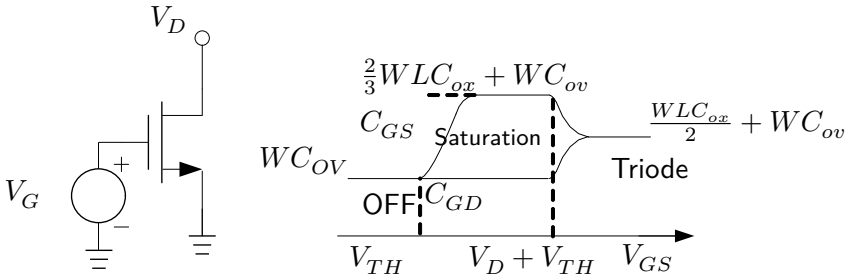

Parasitic Capacitance

Calculate C_{SB} and C_{DB} of the two structures below.

NMOS

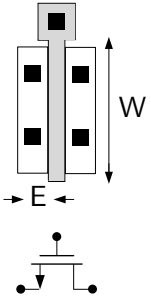

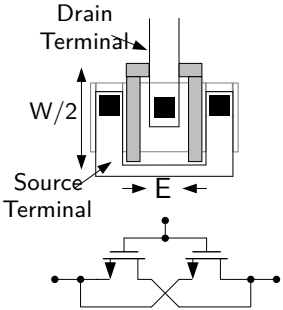

Parasitic Capacitance

Solution:

$$\text{Left: } C_{DB} = \frac{W}{2}EC_j + 2\left(\frac{W}{2} + E\right)C_{jsw} \tag{23}$$

$$\text{Right: } C_{DB} = C_{SB} = WEC_j + 2(W+E)C_{jsw} \tag{24}$$

$$\begin{aligned} C_{SB} &= 2\left[\tfrac{W}{2}EC_j + 2\left(\tfrac{W}{2} + E\right)C_{jsw}\right] \\ &= WEC_j + 2(W+2E)C_{jsw} \end{aligned} \tag{25}$$

- Drain junction capacitance is greatly reduced

Complete Small-Signal Model

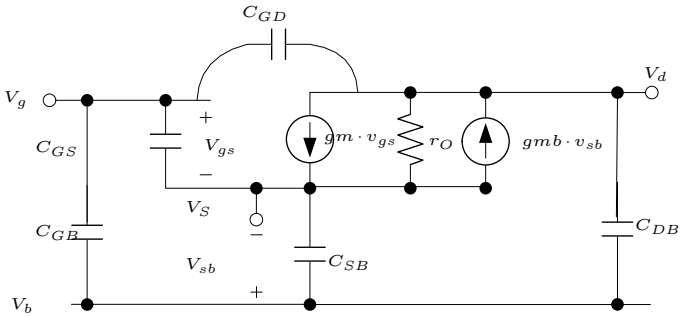

Only when MOSFET is off should we need to consider C_{GB}, which includes the gate oxide capacitance and the depletion region capacitance in series.

Spice Model

NMOS Model

LEVEL $= 1$	VTO $=0.7$	GAMMA $= 0.45$	PHI $= 0.9$
NSUB $= 9e+14$	LD $= 0.08e-6$	UO $= 350$	LAMBDA $= 0.1$
TOX $= 9e-9$	PB $= 0.9$	CJ $= 0.56e-3$	CJSW $= 0.35e-11$
MJ $= 0.45$	MJSW $= 0.2$	CGDO $= 0.4e-9$	JS $= 1.0e-8$

PMOS Model

LEVEL $= 1$	VTO $= -0.8$	GAMMA $= 0.4$	PHI $= 0.8$
NSUB $= 5e+14$	LD $= 0.09e-6$	UO $= 100$	LAMBDA $= 0.2$
TOX $= 9e-9$	PB $= 0.9$	CJ $= 0.94e-3$	CJSW $= 0.32e-11$
MJ $= 0.5$	MJSW $= 0.3$	CGDO $= 0.3e-9$	JS $= 0.5e-8$

First Order Systems

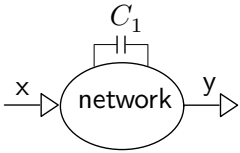

a)

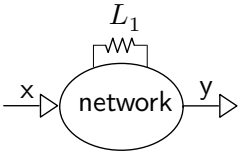

b)

- No energy is store in the circle. In general, a one pole one zero system
- $H(S) = \frac{a_0 + a_1 S}{1 + bS}$

First Order Systems

- The low frequency is represented by a_0
- $a_0 = H(s)\,|_{c_1=0} = H^{\circ}$
- The time constant determines b1 (This is the pole of the system)
- $b_1 = \tau = RC_1$
- The ratio of a_0 and a_1 determines the location of the zero

First Order Systems

- $H(S) = \frac{a_0 + a_1 S}{1 + bs}$
- $H_i(s) = \frac{a_0 + \alpha_1^i C_i s}{1 + \beta_1^i C_i s}$
- (It is easy to convince ourselves that a1 is also related to the capacitor.)
- The transfer function shall be valid for all capacitor values including zero and infinity.
- the first denominator coefficient $b1$, is simply given by the sum of these zero-value time constants (ZVT)
- $b_1 = \sum_{i=1}^{N} \tau_i^0$

First Order Systems

- $H_i(s) = \frac{a_0+\alpha_1^i C_i s}{1+\beta_1^i C_i s}$C1 goes to inf H(s) $= \frac{\alpha_1}{\beta_1}$

$$H(s) = \frac{H^0 + H^1 \tau s}{1 + \tau s} \tag{26}$$

- If it is an inductor, $\tau = \frac{L_1}{R_0}$
- To find the time constant, remove the cap/ind nulling all the sources, find the resistance.
- To find transfer constant H_0, it is just the low frequency gain.
- To find the transfer constant H_1, we look into high frequency response, so the cap shall be shorted. For inductor it is the opposite.

First Order Systems

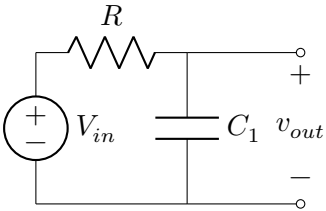

$$H^0 = 1 \tag{27}$$

$$\tau = RC_1 \tag{28}$$

$$H^1 = 0 \tag{29}$$

$$H(s) = \frac{1}{1 + RCS} \tag{30}$$

First Order Systems

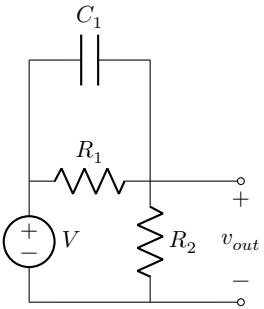

- We do zero frequency response to find out H_0
- $H^0 = \frac{R_1}{R_1+R_2}$
- We null sources to find τ_1
- $\tau_1 = (R_1 \parallel R_2)\, C_1$
- We short circuit to find H_1
- $H^1 = 1$
- $H(s) = \frac{R_1}{R_1+R_2} \frac{1+R_1C_1S}{1+(R_1\|R_2)C_1S}$

First Order Systems

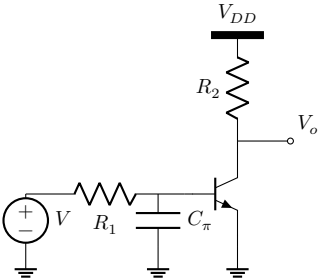

$$H^0 = -\frac{r_\pi}{R_1 + r_\pi} g_m R_2 \qquad (31)$$

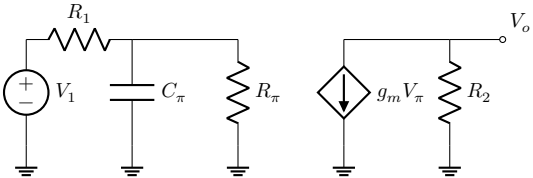

$$H^\pi = 0 \qquad (32)$$

First Order Systems

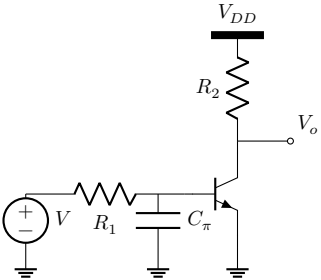

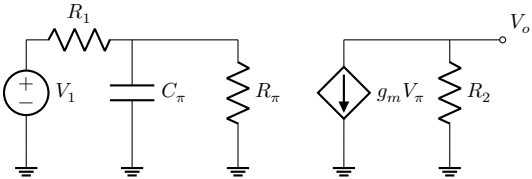

$$\tau = (R_1 \parallel r_\pi)\, C_\pi \qquad (33)$$

$$H(S) = \frac{H^0}{1 + \tau S} \qquad (34)$$

If there is a zero in the system, then we can test it with a shorted cap/ open ind and see if the output still have some value.

First Order Systems

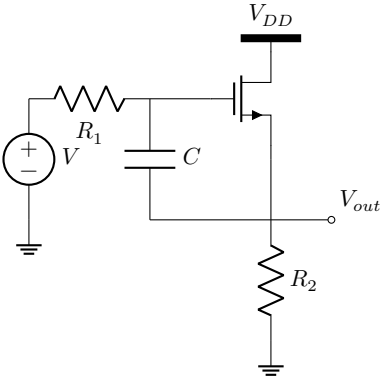

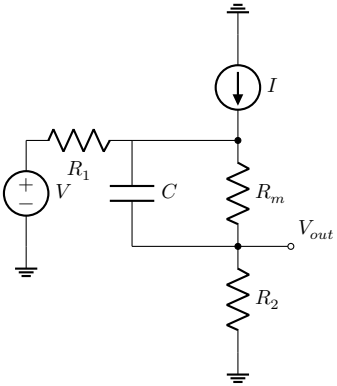

First Order Systems

- Low frequency, $Vx = V_{in}$
- Vout is voltage divider,
- $H^0 = \frac{R_2}{R_2+r_m}$ (assume it's a bjt)
- $H^1 = \frac{R_2}{R_2+r_1}$
- $R_2\left(g_m v_x - i_x\right) + v_x = R_1 i_x$
- $R = \frac{R_1+R_2}{1+g_m R_2}$
- You can imagine the existence of a zero and a pole.

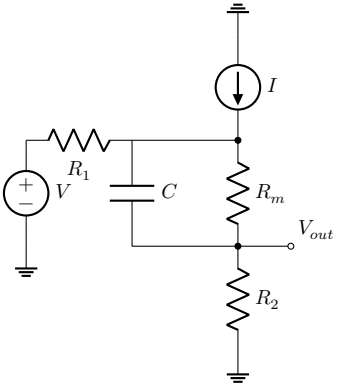

First Order Systems

transistor model statement for the 2N696

.model Q2N696 NPN (Is=14.34f Xti=3 Eg=1.11 Vaf=74.03 Bf=65.62 Ne=1.208 Ise=19.48f Ikf=.2385 Xtb=1.5 Br=9.715 Nc=2 Isc=0 Ikr=0 Rc=1 Cjc=9.393p Mjc=.3416 Vjc=.75 Fc=.5 Cje=22.01p Mje=.377 Vje=.75 Tr=58.98n Tf=408.8p Itf=.6 Vtf=1.7 Xtf=3 Rb=10)

First Order Systems

.model NPN ($C_{je} = 20$ fF, $C_{jc} = 20$ fF, $\beta_0 = 100$, $C_{js} = 50$ fF, $\tau_F = 2$ ps, $C_L = 150$ fF) c_{je} Zero bias B-E depletion capacitance

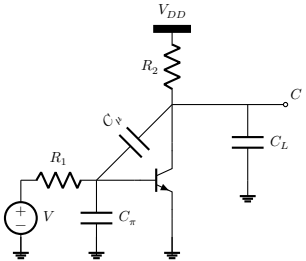

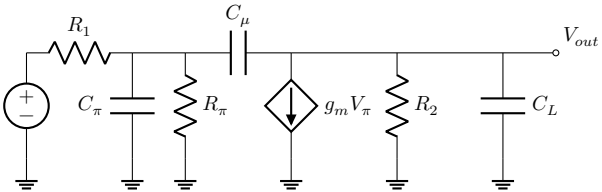

First Order Systems

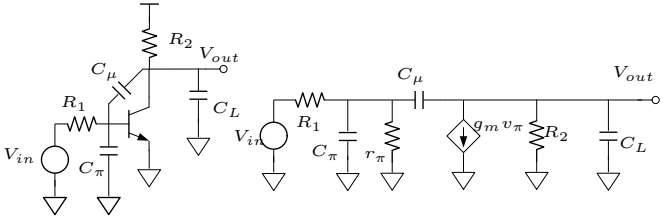

We can use those parameters to determine small signal parameters. a collector current of 1mA which give you a $Gm = 40mS \quad \beta_0 = 100$

- $C_\pi = C_{je} + C_b = 100\text{fF}$
- $C_L = C_{\text{out}} + C_{js} = 200\text{fF}$
- $C_b = g_m \tau_F = 80fF$
- $R_1 = 1K\Omega$
- $R_2 = 2K\Omega$

First Order Systems

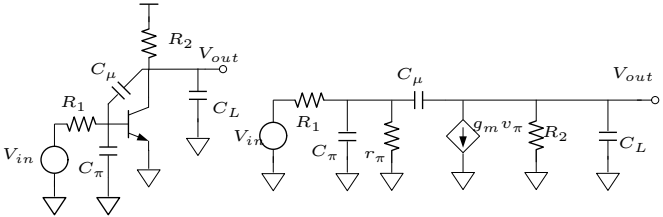

- $b_1 = \sum_i \tau_i^0 = \tau_\pi^0 + \tau_\mu^0 + \tau_L^0$
- $H^0 = -57$
- $\tau_\pi^0 \approx 70\text{ps} \quad \tau_\mu^0 \approx 1200\text{ps} \quad \tau_L^0 = 400\text{ps}$
- $\omega_h \approx 1/b_1 \approx 2\pi \cdot 95\text{MHz}$
- This allows you to determine the lowest operating frequency, and also the contribution of each nodes in the circuit.

First Order Systems

- $R_\pi^0 = r_\pi \parallel \frac{R_1+R_2}{1+g_m R_2}$
- $R_\mu^0 = R_{\text{left}} + R_{\text{right}} + G_m R_{\text{left}} R_{\text{right}}$
- $R_{\text{left}} \equiv R_B \parallel [r_\pi + (1+\beta)R_E]$
- $R_{\text{right}} \equiv R_C$
- $G_m = \frac{g_m}{1+g_m R_2}$
- $R_\theta^0 \approx \frac{R_2+R_3}{1+g_m R_2}$
- $b_1 = \sum_{i=1}^{N} \tau_i^0$

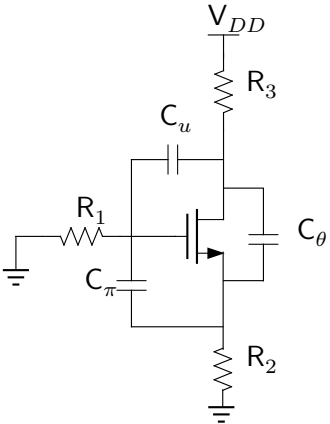

Further discussion on P and Z

- $H(s) = \frac{H^0 + H^1 \tau s}{1+\tau s} = H^\circ \frac{1+\frac{H^1}{H^0}\tau s}{1+\tau s}$
- $P = -\frac{1}{\tau}$
- $Z = -\frac{1}{H^1} = \frac{H^0}{H^0}\tau\left(-\frac{1}{\tau}\right)$
- $Z = \frac{H^0}{H^1}P$

Further discussion on P and Z

$$H(s) = \frac{H^0 + H^1 \tau S}{1 + \tau S} = H^0 \frac{1}{1 + \tau S} + H^1 \frac{\tau S}{1 + \tau S} \tag{35}$$

Low path filter High path filter

$$s(t) = H^0 \left(1 - e^{-t/\tau}\right) u(t) + H^1 e^{-t/\tau} u(t) \tag{36}$$

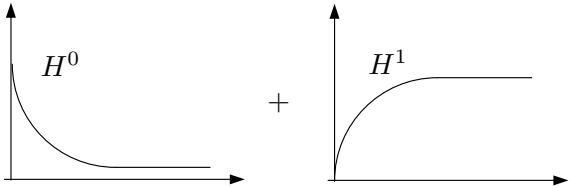

The final waveform also tells you the existence of poles and zeros.

N^{th} order system

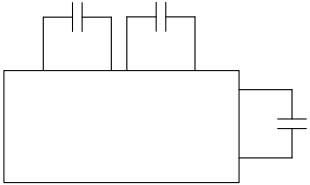

$$H(s) = \frac{a_0 + a_1 S + a_2 S^2 + ...}{1 + b_1 S + b_2 S^2 + ...} \tag{37}$$

- Only the caps and inductors produces S.
- To get a_1 we have to have a cap (or inductor)

N^{th} order system

- We can also infer that the s^2 term comes from two capacitors.
- $H(s) = \frac{a_0+\left(\sum_{i=1}^{N}\alpha_1^i C_i\right)s+\left(\sum_i^{1\leqslant i<j\leqslant N}\alpha_j^{ij}C_iC_j\right)s^2+...}{1+\left(\sum_{i=1}^{N}\beta_1^i C_i\right)s+\left(\sum_i^{1\leqslant i<j\leqslant N}\sum_j^{ij}\beta_2^{ij}C_iC_j\right)s^2+...}$
- If we set all c's except ci as zeros
- $H_i(s) = \frac{a_0+\alpha_1^i C_i s}{1+\beta_1^i C_i s}$
- $\tau_i^0 = R_i^0 C_i$
- $\beta_1^i = R_i^0$
- $b_1 = \sum_{i=1}^{N}\tau_i^0$

N th order system

- $b_1 = \sum_{i=1}^{N} \tau_i^0$
- coefficient b_1 is the sum of all zero valued time constant.
- $a_1 = \sum_{i=1}^{N} \tau_i^0 H^i$
- This allows us to find out the dominant time constant.

N th order system

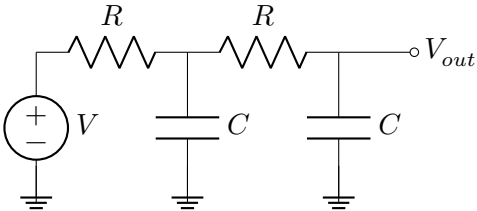

It is a two cap system, therefore the number of poles are two.
It is a system with an infinite response of zero if we short both capacitors, so there is no zeros.

N^{th} order system

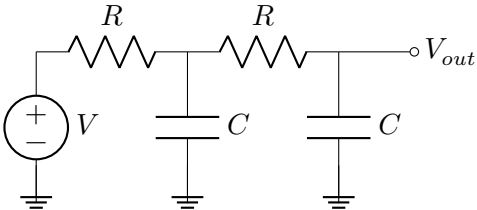

- $H(S) = \frac{1}{1+3RCS+(RC)^2S^2}$
- $b_1 = \sum_{i=1}^{N} \tau_i^0 = \tau_1^0 + \tau_2^0$
- $\tau_1^0 = RC$
- $\tau_2^0 = 2RC$
- $b_1 = 3R_c$

N^{th} order system

$$H(S) = \frac{1}{1 + 3RCS + (RC)^2 S^2} \tag{38}$$

- If the impedance seen by one cap does not change as we open or short the other cap, we say that the two-time constant are uncoupled to each other, and the expression can be written as

$$H(s) = \frac{H^0}{(1 + \tau_1 S)(1 + \tau_2 S)} \tag{39}$$

- We now have the $3RC$ term. The question is whether it is true in this case to determine $(RC)^2 S^2$

$$H(s) = \frac{1}{1 \quad} \tag{40}$$

N th order system

We now know how to calculate a_1, b_1, and a_0.

$$H(s) = \frac{a_0 + \left(\sum_{i=1}^{N} \alpha_1^i C_i\right) s + \left(\sum_i^{1 \leqslant i < j \leqslant N} \alpha_j^{ij} C_i C_j\right) s^2 + \ldots}{1 + \left(\sum_{i=1}^{N} \beta_1^i C_i\right) s + \left(\sum_i^{1 \leqslant i < j \leqslant N} \sum_j \beta_2^{ij} C_i C_j\right) s^2 + \ldots} \tag{42}$$

A_O is the zero frequency response. B_1 is the summation of time constant A_1 can be obtained from infinite time response.

N^{th} order system

$$b_2 = \sum_{i}^{i<j<N} \sum_{j}^{0} \tau_j^i \tag{43}$$

- That means you don't repeat $\tau 12$ and $\tau 21$
- τ_j^i means the time constant of element j when element I is infinite frequency

$$a_2 = \sum \sum_{j}^{i<j<N} \tau_i^0 \tau_j^i H^{ij} \tag{44}$$

- We can expect b_n is a multiple summation of the product of many time constants

N^{th} order system

$$b_n = \sum_{i}^{1\leqslant i<j<k} \sum_{j} \sum_{k\ldots}^{\ldots} \ldots \tau_i^0 \tau_j^i \tau_k^{ij} \ldots \tag{45}$$

$$a_n = \sum_{i}^{1\leqslant i<j<k} \sum_{j}^{\ldots\ldots N} \ldots \tau_i^0 \tau_j^i \tau_k^{ij} \ldots H^{ijk\ldots} \tag{46}$$

I will skip the derivations and show you how to use it.

N^{th} order system

- $H(s) = \frac{a_0+a_1 s+a_2 s^2}{1+b_1 s+b_2 s^2}$
- $b_2 = \tau_1^0 \tau_2^1 = \tau_2^0 \tau_1^2$
- $a_2 = \tau_1^0 \tau_2^1 H^{12} = \tau_2^0 \tau_1^2 H^{12}$
- $b_1 = \tau_1^0 + \tau_2^0$
- $a_1 = \tau_1^0 H^1 + \tau_2^0 H^2$

N^{th} order system

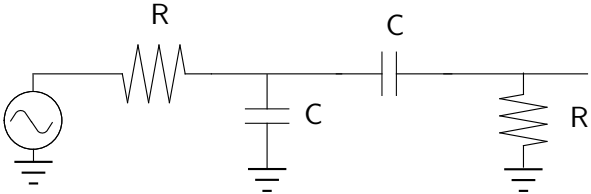

- Two pole and one zero
- How do we test this?
- $H^0 = 0$

$$\tau_1^0 = R_1 C_1 \tag{47}$$

$$\tau_2^0 = (R_1 + R_2)\, C_2 \tag{48}$$

N^{th} order system

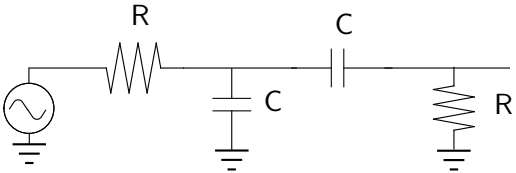

$$\tau_2^1 = R_2 C_L \tag{49}$$

$$\tau_1^2 = (R_1 \parallel R_2)\, C_1 \tag{50}$$

$$\tau_1^0 \tau_2^1 = R_1 C_1 R_2 C_2 = \tau_2^0 \tau_1^2 \tag{51}$$

$$H^1 = 0 \tag{53}$$

$$H^2 = \frac{R_2}{R_2 + R_1} \tag{54}$$

N^{th} order system

- Two poles and one zero
- $H^0 = \frac{R_2}{R_2+r_m}$
- $\tau_\pi^0 = C_\pi \frac{R_1+R_2}{1+g_m R_2}$
- $\tau_\mu^0 = C_\mu R_1$
- $\tau_\mu^\pi = C_\mu \left(R_1 \parallel R_2\right)$
- $H^\mu = 0$
- $H^\pi = \frac{R_2}{R_1+R_2}$
- $H^{\mu\pi} = 0$

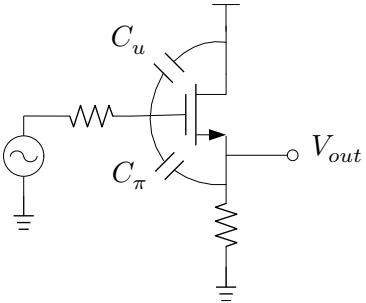

N^{th} order system

- Now we can write out the transfer function. If we assume that $R_2 >> R_1$
- And $R_2 >> R_m$

$$H^0 = \frac{R_2}{R_2 + r_m} \tag{57}$$

$$\tau_\pi^0 = C_\pi \frac{R_1 + R_2}{1 + g_m R_2} = r_m C_\pi \tag{58}$$

$$\tau_\mu^0 = C_\mu R_1 \tag{59}$$

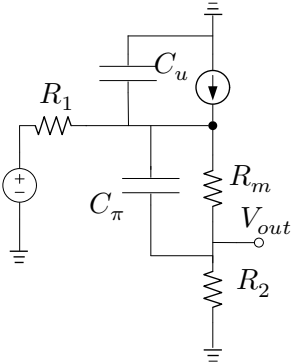

N^{th} order system

$$\tau_\mu^\pi = C_\mu \left(R_1 \parallel R_2\right) = C_\mu R_1 \tag{60}$$

$$H^\mu = 0 \tag{61}$$

$$H^\pi = \frac{R_2}{R_1 + R_2} \tag{62}$$

$$\tau_\pi^0 \tau_\mu^\pi = r_m R_1 C_\pi C_\mu \tag{63}$$

$$H^\pi \tau_\pi^0 = r_m C_\pi \frac{R_2}{r_m + R_2} = H^0 r_m C_\pi \tag{64}$$

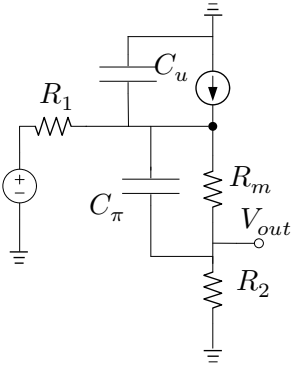

N^{th} order system

- $H(S) = H^0 \frac{1+r_m C_\pi S}{1+(r_m C_\pi + R_1 C_\mu)S + r_m C_\pi R_1 C_\mu S^2} = \frac{H^0}{1+R_1 C_\mu S}$
- This essentially tells us the dominate pole is the C_μ, because C_π shares current between the capacitor and the resistor, so that it tells us to improve the bandwidth of operation, we need to use a inductor or some topology to cancel the effect of C_μ

Bandwidth Estimation

- The whole system can be expressed as the product of a high pass and a low pass transfer function.
- If I'm designing an analog circuit, I can use transfer function to estimate bandwidth, assuming I care about the lowpass one.
- For low frequency system, in many cases we can assume a zeroless system.
- For example, in common-source stage and the source-follower stage, the zero's frequencies are comparable to the cut-off frequency of the transistor itself

Bandwidth Estimation

- $H(s) \approx \frac{a_0}{1+b_1 s+b_2 s^2+...+b_n s^n}$
- At dc $(\omega = 0)$, the only term in the denominator that matters is the leading 1.
- As the frequency goes up and starts approaching the wh, the first term that becomes non-negligible would be $b1$, so in the vicinity of the ωh
- The system is pretty much
- $H(s) \approx \frac{a_0}{1+b_1 s}$
- This tells us, in order to find out the cutoff frequency,
- We calculate b1

Bandwidth Estimation

- $\omega_h \approx \frac{1}{b_1} = \frac{1}{\sum_{i=1}^{N} \tau_i^0}$
- $\frac{a_1}{1+b_1 S+b_2 S^2} \Rightarrow H(j\omega) = \frac{a_0}{(1-b_2\omega^2)+j\omega b_1}$
- It is a conservative estimation of bandwidth

Lecture 21

EECS 311 Analog Circuits

Xuyang Lu
2023 Fall

上海交通大學
SHANGHAI JIAO TONG UNIVERSITY

Recap of Last Lecture

- Review of 216

Topic to be covered

- Frequency Response, Bode plot Amplitude and Phase Estimation

Representation of Poles and Zeros

The angle of the transfer function is the sum of the angles of the vectors associated with the zeros minus the sum of the angles of the vectors associated with the poles

Representation of Poles and Zeros

- A second-order system has a pair of complex conjugate poles at $s = -2 \pm j3$ and a single zero at the origin of the s-plane. Find the transfer function and use the pole-zero plot to evaluate the transfer function at $s = 0 + j5$.

$$H(s) = K\frac{s}{(s-(-2+j3))(s-(-2-j3))} = K\frac{s}{s^2+4s+13} \tag{1}$$

Representation of Poles and Zeros

$$|H(s)| = K\frac{\sqrt{(0-5)^2}}{\sqrt{(0-(-2))^2+(5-3)^2}\sqrt{(0-(-2))^2+(5-(-3))^2}} = K\frac{5}{4\sqrt{34}} \quad (2)$$

$$\angle H(s) = \tan^{-1}(5/0) - \tan^{-1}(2/2) - \tan^{-1}(8/2) = -31^\circ \quad (3)$$

Frequency Responses

- y substituting $j\omega$ for s

$$H(j\omega) = K\frac{(j\omega - z_1)(j\omega - z_2)\ldots(j\omega - z_{m-1})(j\omega - z_m)}{(j\omega - p_1)(j\omega - p_2)\ldots(j\omega - p_{n-1})(j\omega - p_n)} \tag{4}$$

$$|j\omega - p_i| = \sqrt{\sigma_i^2 + (\omega - \omega_i)^2} \tag{5}$$

$$\angle(s - p_i) = \tan^{-1}\left(\frac{\omega - \omega_i}{-\sigma_i}\right) \tag{6}$$

Frequency Responses Example

- Sketch of Amp/phase from Complex plane

Frequency Responses Example

- Sketch of Amp/phase from Complex plane

Constructing Magnitude Bode Plot

- Each pole or zero contributes a change in the slope of the asymptotic plot of ± 20 dB/decade above its break frequency. A complex conjugate pole or zero pair gives a total change in the slope of ± 40 dB/decade.

Constructing Phase Bode Plot

- For lefthand plane
- Pole
  - Slope changes by -20 dB/decade
  - Phase decreases by 90°
- Zero
  - Slope changes by 20 dB/decade
  - Phase increases by 90°

Constructing Magnitude Bode Plot

$$H(s) = \frac{1}{s+1} \Rightarrow H(j\omega) = \frac{1}{j\omega + 1} \tag{7}$$

$$\angle H(j\omega) = -\tan^{-1}(\omega) \tag{8}$$

$$\angle H(j\omega) = \begin{cases} 0^\circ & \omega \ll 1 \\ -90^\circ & \omega \gg 1 \end{cases} \tag{9}$$

- The behavior for a zero is similar. The phase increases by 90° and passes though the midpoint of 45° at the break point

Constructing Phase Bode Plot

We can extend the results for simple repeated poles and zeroes as before using the more general function

$$H(s) = (s+a)^{\pm r} \Rightarrow H(j\omega) = (j\omega + a)^{\pm r} \tag{10}$$

$$\angle H(j\omega) = \begin{cases} 0^\circ & \omega \ll a \\ \pm r 90^\circ & \omega \gg a \end{cases} \qquad \angle H(ja) = \pm r 45^\circ \tag{11}$$

Unstable (right half plane) poles and zeros have opposite behavior

Zero @ Origin

$$H(s) = s \tag{12}$$

$$|H(j\omega)| = \omega \Rightarrow \omega = 1 \Rightarrow \log|H(j\omega)| = 0dB \tag{13}$$

- Slope 20 dB/decade

Pole @ Origin

$$H(s) = \frac{1}{s} \text{ and } s = j\omega \tag{14}$$

$$\angle H(j\omega) = -90^\circ \text{ Phase always at } -90^\circ \tag{15}$$

$$|H(j\omega)| = \frac{1}{\omega} \Rightarrow \omega = 1 \Rightarrow \log(1) = 0dB \tag{16}$$

- Slope -20 dB/decade

Single Zero @-σ

Single Pole @-σ

Poles

$$A_v = \frac{1}{1 + sRC} \tag{17}$$

$$\omega_p = -\frac{1}{RC} \tag{18}$$

What happens at the poles?

$$A_v\left(w_p\right) = \frac{1}{1 + j\omega_p CR} \tag{19}$$

$$A_v\left(w_p\right) = \frac{1}{1 + j\frac{1}{CR}CR} = \frac{1}{1 + j} \tag{20}$$

$$|A_v\left(w_p\right)| = |\frac{1}{1 + j}| = \frac{1}{\sqrt{2}} \tag{21}$$

Poles

- Gains drops by 3dB at ωp
- This is why we care about 3dB bandwidth, since we can easily estimate that using the location of the lowest pole.

Bode Plot Example

$$H(s) = \frac{s}{\left(1 + \frac{s}{10}\right)\left(1 + \frac{s}{10^4}\right)} \tag{22}$$

Zero @ 0
Zero @ -10
Zero @ -10^4

Bode Plot Example

$$H(s) = \frac{1000}{s+100} = \frac{10}{1+\frac{s}{100}} \tag{23}$$

$$DC \text{ gain } = 10 = 20\log 10 = 20 \text{ dB} \tag{24}$$

Pole at -100.

Finite Op-amp Bandwidth

Remember for a RC circuit

$$V_{out} = \frac{1}{1 + j\omega CR} V_{in} \tag{25}$$

$$\omega_p = -\frac{1}{RC} \Rightarrow \tag{26}$$

$$Av(\omega) = \frac{1}{1 + j\omega/\omega_p} \tag{27}$$

- Ideal : Gain is Infinite
- Gain is finite, bandwidth infinite
- Gain is finite, bandwidth finite
- Assume single pole amplifier
- A0 is the DC gain,

$$A(j\omega) = \frac{Ao}{1 + j\omega/\omega p} \tag{28}$$

Finite Op-amp Bandwidth

$$A(j\omega) = \frac{A_0}{1 + j\omega/\omega p} \tag{29}$$

Typical op-amps have every low 3dB bandwidth

Unity Gain Frequency

ω_t is ω where $|A(j\omega)| = 1$

$$A(j\omega) = \frac{A_0}{1 + j\omega/\omega b} \tag{30}$$

$$1 = \frac{A_0}{\omega_{T/\omega_b}} \Rightarrow \omega_T = A_0\omega_b \tag{31}$$

$$\omega_T = A_0\omega_b \tag{32}$$

Gain bandwidth product (GBW) important parameter

Non-Inverting Amplifier

$$v_n = v_O \frac{R_1}{R_1 + R_2} = v_O \beta \tag{33}$$

$$\beta = \frac{R_1}{R_1 + R_2} \tag{34}$$

$$V_0(\omega) = A(\omega) V_{Id} = A(\omega)\left(V_I - V_n\right) \tag{35}$$

$$= A(\omega)\left(V_I - \beta V_0\right) \tag{36}$$

$$= \frac{A_0}{1 + \omega/\omega_b}\left(V_I - \beta V_0\right) \tag{37}$$

Non-Inverting Amplifier

We pick $\omega_p = -\omega_b$ that frequency looks positive.

$$v_O = \frac{A_0}{1 - \frac{s}{\omega_p}} \left(v_I - \beta v_O\right) \tag{38}$$

$$v_O \left(1 - \frac{s}{\omega_p}\right) + A_0 \beta v_O = A_0 v_I \tag{39}$$

$$\frac{V_0}{V_I} = \frac{A_0}{1 + \beta A_0 - s/\omega_p} = \frac{A_0}{1 + \beta A_0} \frac{1}{1 - \frac{S}{\omega_p (1 + \beta A_0)}} \tag{40}$$

This tells me the bandwidth of a non-inverting amplifier is $\omega_p \left(1 + \beta A_0\right)$

Lecture 22

VE 311 Analog Circuits

Xuyang Lu
2023 Summer

上海交通大學
SHANGHAI JIAO TONG UNIVERSITY

Recap of Last Lecture

- Review of 216 Frequency Response
- Bode plot Amplitude and Phase Estimation

Topic to be covered

- Source of capacitance in Transistors
- Bandwidth of MOSFET amplifiers

Parasitic Capacitance

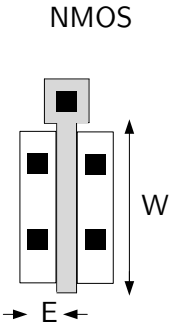

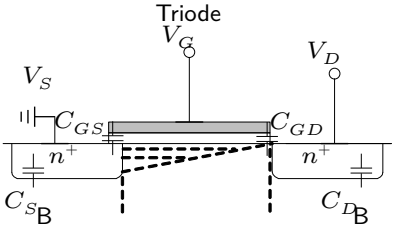

Parasitic Capacitance

$$C_{GS} = W_{ov} + 1/2\,(WLC_{ox}) \quad (1)$$

$$C_{GD} = WC_{ov} + 1/2\,(WLC_{ox}) \quad (2)$$

$$C_{SB} = WEC_j + 2(W+E)C_{jsw} \quad (3)$$

$$C_{DB} = WEC_j + 2(W+E)C_{jsw} \quad (4)$$

Parasitic Capacitance

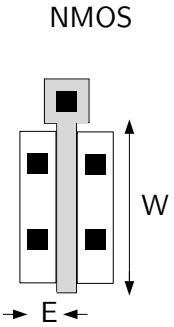

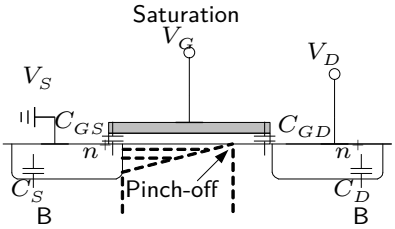

Parasitic Capacitance

$$C_{GS} = WC_{ov} + 2/3\,(WLC_{ox}) \quad (5)$$

$$C_{GD} = WC_{ov} \quad (6)$$

$$C_{SB} = WC_j + 2(W+E)C_{jsw} \quad (7)$$

$$C_{DB} = WEC_j + 2(W+E)C_{jsw} \quad (8)$$

Parasitic Capacitance

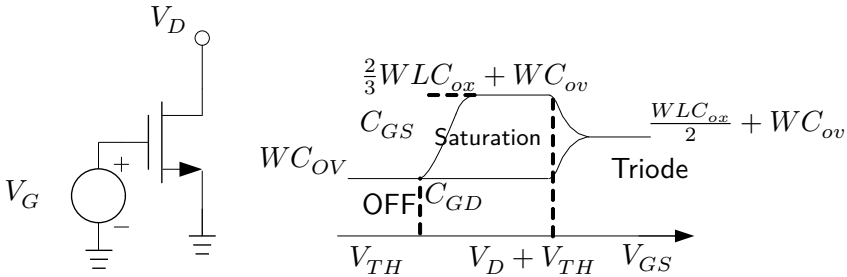

Parasitic Capacitance

Calculate C_{SB} and C_{DB} of the two structures below.

NMOS

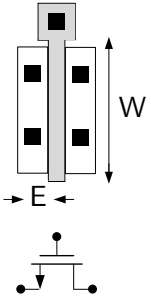

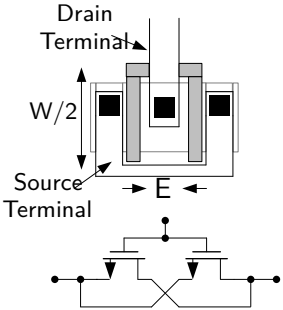

Parasitic Capacitance

Solution:

$$\text{Left: } C_{DB} = \frac{W}{2} E C_j + 2\left(\frac{W}{2} + E\right) C_{jsw} \tag{9}$$

$$\text{Right: } C_{DB} = C_{SB} = W E C_j + 2(W+E) C_{jsw} \tag{10}$$

$$\begin{aligned} C_{SB} &= 2\left[\tfrac{W}{2} E C_j + 2\left(\tfrac{W}{2} + E\right) C_{jsw}\right] \\ &= W E C_j + 2(W + 2E) C_{jsw} \end{aligned} \tag{11}$$

- Drain junction capacitance is greatly reduced

Complete Small-Signal Model

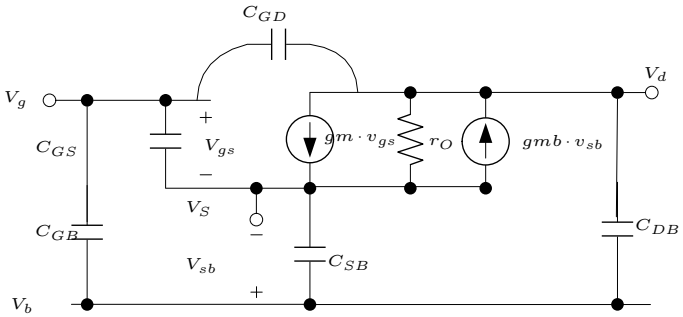

Only when MOSFET is off should we need to consider C_{GB}, which includes the gate oxide capacitance and the depletion region capacitance in series.

Spice Model

NMOS Model

LEVEL $= 1$	VTO $=0.7$	GAMMA $= 0.45$	PHI $= 0.9$
NSUB $= 9e + 14$	LD $= 0.08e - 6$	UO $= 350$	LAMBDA $= 0.1$
TOX $= 9e - 9$	PB $= 0.9$	CJ $= 0.56e - 3$	CJSW $= 0.35e - 11$
MJ $= 0.45$	MJSW $= 0.2$	CGDO $= 0.4e - 9$	JS $= 1.0e - 8$

PMOS Model

LEVEL $= 1$	VTO $= -0.8$	GAMMA $= 0.4$	PHI $= 0.8$
NSUB $= 5e + 14$	LD $= 0.09e - 6$	UO $= 100$	LAMBDA $= 0.2$
TOX $= 9e - 9$	PB $= 0.9$	CJ $= 0.94e - 3$	CJSW $= 0.32e - 11$
MJ $= 0.5$	MJSW $= 0.3$	CGDO $= 0.3e - 9$	JS $= 0.5e - 8$

Impedances

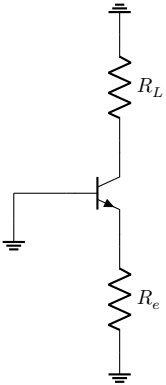

$$R_c = r_o + (R_e \parallel r_\pi) + g_m r_o (R_e \parallel r_\pi) \tag{12}$$

$$= r_e + (g_m r_o)(R_e \parallel r_\pi) \tag{13}$$

$$R_{in} = r_\pi \parallel \left[\frac{r_o + R_L}{g_m r_o + 1}\right] = \frac{1}{g_m} + \frac{R_L}{g_m r_o} \tag{14}$$

Transfer Function Using KCL

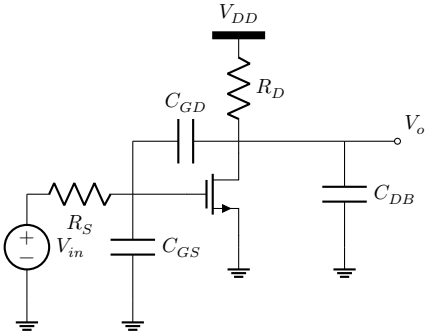

$$\frac{V_x - V_{in}}{R_S} + \frac{V_x}{\frac{1}{SC_{GS}}} + \frac{V_x - V_{out}}{\frac{1}{SC_{GD}}} = 0 \qquad (15)$$

$$\frac{V_{out} - V_x}{\frac{1}{SC_{GD}}} + \frac{V_{out}}{\frac{1}{SC_{DB}}} + \frac{V_{out}}{R_D} + V_x g_{m1} = 0 \qquad (16)$$

$\gamma \neq 0, \lambda = 0$

Transfer Function Using KCL

$$\frac{v_{out}}{v_{in}} = \frac{\left(C_{GD}S - g_{m1}\right)R_D}{R_S R_D \xi S^2 + \left[R_S\left(1 + g_{m1}R_D\right)C_{GD} + R_S C_{GS} + R_D\left(C_{DB} + C_{GD}\right)\right]S + 1} \tag{17}$$

$$\xi = C_{GS}C_{GD} + C_{GS}C_{DB} + C_{GD}C_{DB} \tag{18}$$

Transfer Function Using KCL

$$= \frac{-g_{m1}R_D\left(1-\frac{S}{\omega_z}\right)}{\left(1+\frac{S}{\omega_{p1}}\right)\left(1+\frac{S}{\omega_{p2}}\right)} \tag{19}$$

$$= \frac{-g_{m1}R_D\left(1-\frac{S}{\omega_z}\right)}{\frac{S^2}{\omega_{p1}\omega_{p2}}+\left(\frac{1}{\omega_{p1}}+\frac{1}{\omega_{p2}}\right)S+1} \tag{20}$$

If $\omega_{p1} \ll \omega_{p2}$, $\frac{1}{\omega_{p2}}$ can be ignored.

Transfer Function Using KCL

$$\omega_{p1} = \frac{1}{R_S\left(1+g_{m1}R_D\right)C_{GD} + R_S C_{GS} + R_D\left(C_{DB}+C_{GD}\right)} \tag{21}$$

$$\approx \frac{1}{R_S\left(1+gm_1 R_D\right)C_{GD} + R_S C_{GS}} \tag{22}$$

$$\omega_{p2} = \frac{R_S\left(1+g_{m1}R_D\right)C_{GD} + R_S C_{GS} + R_D\left(C_{DB}+C_{GD}\right)}{R_S R_D\left(C_{GS}C_{GD}+C_{GS}C_{DB}+C_{GD}C_{DB}\right)} \tag{23}$$

$$\approx \frac{R_S C_{GS}}{R_S R_D\left(C_{GS}C_{GD}+C_{GS}C_{DB}\right)} = \frac{1}{R_D\left(C_{GD}+C_{DB}\right)} \tag{24}$$

If C_{GS} dominates.

Input Impedance

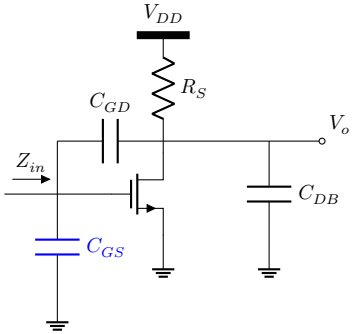

Z_{in1} is the input impedance excluding C_{GS}

$$Z_{in} = Z_{in1} \parallel \frac{1}{SC_{GS}} \tag{25}$$

$\gamma \neq 0, \lambda = 0$

Input Impedance

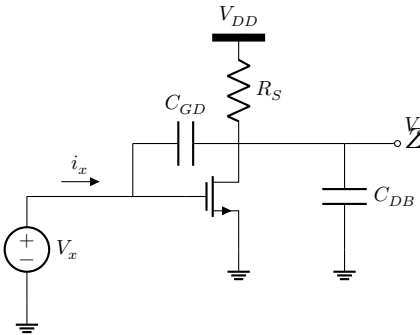

$$i_x = \frac{v_x - v_{out}}{\frac{1}{SC_{GD}}} = \frac{v_{out}}{R_D} + \frac{v_{out}}{\frac{1}{SC_{DB}}} + v_x g_{m1} \tag{26}$$

$$Z_{in1} = \frac{v_x}{i_x} = \frac{1 + R_D\left(C_{GD} + C_{DB}\right)S}{C_{GD}S\left(1 + g_{m1}R_D + R_D C_{DB} S\right)} \tag{27}$$

$$\approx \frac{1}{C_{GD}S\left(1 + g_{m1}R_D\right)} \tag{28}$$

Effect of C_{GD}

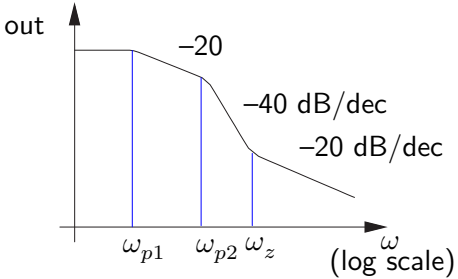

Miller Effect

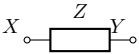

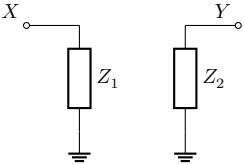

$$Z_1 = \frac{Z}{1 - A_v} \tag{29}$$

$$Z_2 = \frac{Z}{1 - \frac{1}{A_v}} \tag{30}$$

Proof:

$$\frac{X - Y}{Z} = \frac{X}{Z_1} \rightarrow Z_1 = \frac{Z}{1 - \frac{Y}{X}} \tag{31}$$

$$\frac{X - Y}{Z} = \frac{-Y}{Z_2} \rightarrow Z_2 = \frac{Z}{1 - \frac{X}{Y}} \tag{32}$$

Calculate the Input Capacitance

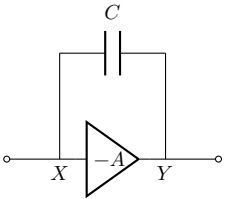

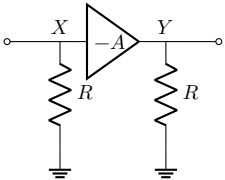

$$Z_1 = \frac{\frac{1}{SC_F}}{1+A} = \frac{1}{S(1+A)C_F} \tag{33}$$

$$Z_2 = \frac{\frac{1}{SC_F}}{1+\frac{1}{A}} = \frac{1}{S\left(1+\frac{1}{A}\right)C_F} \tag{34}$$

Miller Effect Example

The amount of charge flowing into C_F from X is $C_F(1+A)\Delta V$, as if the input capacitance increased to $(1+A)C_F$.

$$R_{in} = \frac{1}{S(1+A)C_F} \tag{35}$$

$$R_{out} = 0 \tag{36}$$

Limitation on Miller Effect

If the impedance Z forms the ONLY signal path between X and Y, then Miller conversion is often invalid.

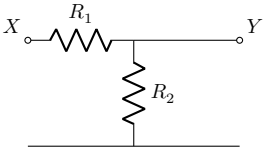

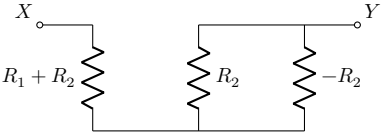

$$A_v = \frac{Y}{X} = \frac{R_2}{R_1 + R_2} \tag{37}$$

Limitation on Miller Effect

$$Z_1 = \frac{R_1}{1 - \frac{R_2}{R_1+R_2}} = R_1 + R_2 \tag{38}$$

$$Z_2 = \frac{R_1}{1 - \frac{R_1+R_2}{R_2}} = -R_2 \tag{39}$$

Miller Effect Example

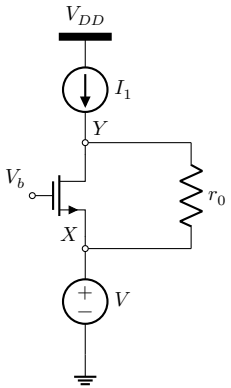

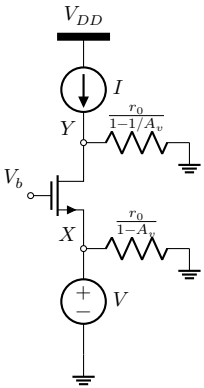

Miller Effect Example

$$A_v = \frac{Y}{X} = 1 + (g_{m1} + g_{mb1})\, r_{o1} \tag{40}$$

$$Z_1 = \frac{r_{01}}{1 - [1 + (g_{m1} + g_{mb1})\, r_{01}]} = \frac{-1}{g_{m1} + g_{mb1}} \tag{41}$$

$$R_{in} = \frac{-1}{g_{m1} + g_{mb1}} \parallel \frac{1}{g_{m1} + g_{mb1}} = \infty \tag{42}$$

- r_o in parallel with the main signal path. Miller conversion is valid.
- The result is the same as direct small-signal analysis.

Association of Poles with Nodes

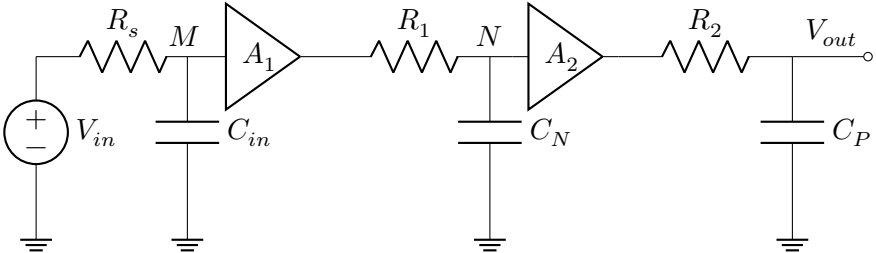

Association of Poles with Nodes

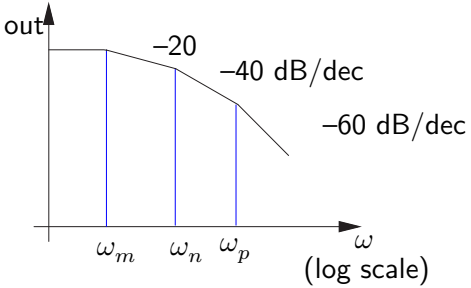

Association of Poles with Nodes

$$v_{out} = v_{in} \frac{\frac{1}{sC_{in}}}{R_S + \frac{1}{SC_{in}}} A_1 \frac{\frac{1}{SC_N}}{R_1 + \frac{1}{sC_N}} \; A_2 \frac{\frac{1}{SC_P}}{R_2 + \frac{1}{sC_P}} \tag{43}$$

$$\frac{v_{out}}{v_{in}}(\omega) = \frac{A_1}{1 + SR_S C_{in}} \frac{A_2}{1 + SR_1 C_N} \frac{1}{1 + SR_2 C_P} \tag{44}$$

$$= A_1 \; A_2 \frac{1}{\left(1 + \frac{s}{\omega_M}\right)\left(1 + \frac{s}{\omega_N}\right)\left(1 + \frac{s}{\omega_P}\right)} \tag{45}$$

$$\omega_M = \frac{1}{R_S C_{in}} \quad (46) \qquad \omega_N = \frac{1}{R_1 C_N} \quad (47) \qquad \omega_P = \frac{1}{R_2 C_P} \; (rad/s) \quad (48)$$

Miller conversion often discards the zeros in the transfer function.

Method 1 (Association Poles With Nodes)

Simplification through Miller effect and then association of poles with nodes.

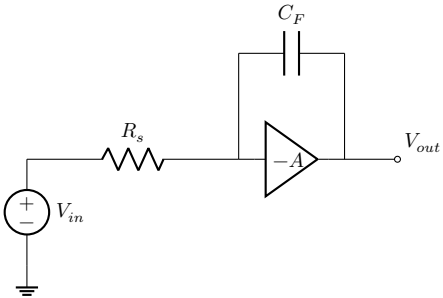

$$\frac{v_{out}}{v_{in}}(\omega \text{ close to } DC) = -A \tag{49}$$

$$\frac{v_{out}}{v_{in}} = \frac{-A}{1 + SR_SC_F(1+A)} \tag{50}$$

Method 2 (Derivation of transfer function using KCL)

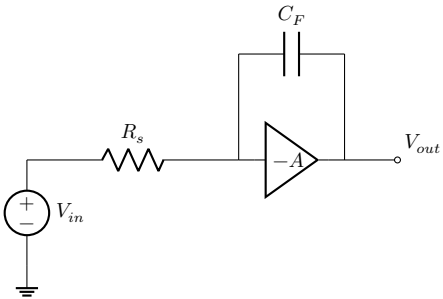

$$v_x - \frac{v_{in} - v_x}{R_S}\frac{1}{SC_F} = v_{out} \tag{51}$$

$$v_{out} = v_x(-A) \tag{52}$$

$$\frac{v_{out}}{v_{in}} = \frac{-A}{1 + SR_SC_F(1+A)} \tag{53}$$

Method 1 (Association Poles With Nodes)

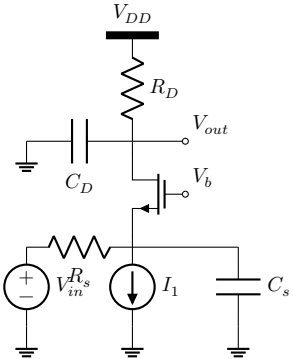

$$\frac{v_{out}}{v_{\text{in}}} = \frac{(g_{m1}+g_{mb1})R_D}{1+(g_{m1}+g_{mb1})R_s}\frac{1}{\left(1+\frac{s}{\omega_X}\right)\left(1+\frac{s}{\omega_Y}\right)} \tag{54}$$

$$\omega_X = \frac{1}{\left(\frac{1}{g_{m1}+g_{mb1}} \parallel R_S\right)C_s}(rad/s) \tag{55}$$

$$\omega_Y = \frac{1}{R_D C_D} \quad (rad/s) \tag{56}$$

Method 2 (Derivation of transfer function using KCL)

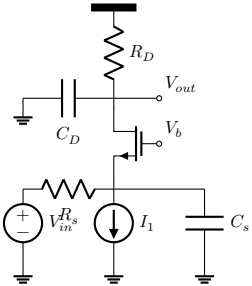

$$\frac{v_{in}}{R_S + \left(\frac{1}{g_{m1}+g_{mb1}} \parallel \frac{1}{SC_S}\right)} \frac{\frac{1}{SC_S}}{\frac{1}{SC_S} + \frac{1}{g_{m1}+g_{mb1}}} \left(R_D \parallel \frac{1}{SC_D}\right) = v_{out} \tag{57}$$

Method 1 (Association Poles With Nodes)

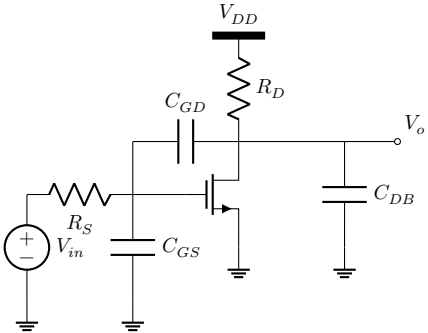

- C_{GD} in parallel with the main signal path. So, Miller conversion is valid.
- Zeros are neglected in the transfer function.
- $A_v = -g_{m1}R_D$ is the low-frequency gain. In reality, it changes with frequency.

Method 1 (Association Poles With Nodes)

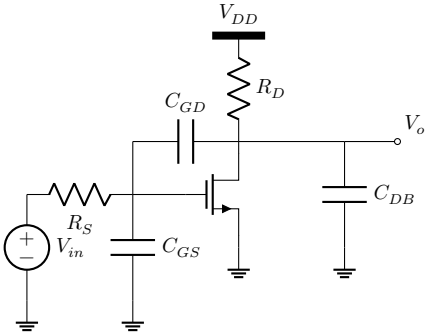

$$\omega_{in} = \frac{1}{R_S\left[C_{GS} + \left(1 + g_{m1}R_D\right)C_{GD}\right]} \tag{58}$$

$$\omega_{out} \approx \frac{1}{R_D\left(C_{DB} + C_{GD}\right)} \tag{59}$$

$$\frac{v_{out}}{v_{in}} = \frac{-g_{m1}R_D}{\left(1 + \frac{S}{\omega_{in}}\right)\left(1 + \frac{S}{\omega_{out}}\right)} \tag{60}$$

Method 1 (Association Poles With Nodes)

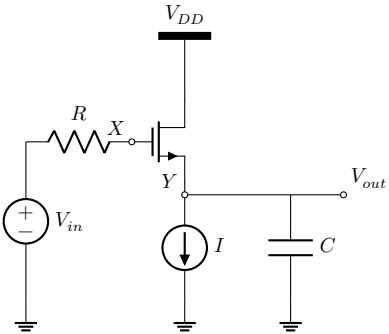

- C_{GS} forms the only signal path between V_{in} and V_{out}. Miller conversion may not be applied here.
- Strong interaction between V_{in} and V_{out} through C_{GS}. Association of poles with nodes method may not be applied here.

Method 1 (Association Poles With Nodes)

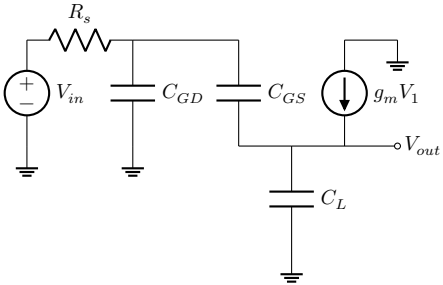

$$\frac{v_{\text{out}}}{\frac{1}{SC_L}} + \frac{v_{\text{out}} - v_a}{\frac{1}{SC_{GS}}} + (v_{\text{out}} - v_a)\, g_{m1} = 0 \qquad (61)$$

$$\frac{v_a - v_{\text{out}}}{\frac{1}{SC_{GS}}} + \frac{v_a}{\frac{1}{SC_{GD}}} + \frac{v_a - v_{\text{in}}}{R_S} = 0 \qquad (62)$$

$$\lambda = \gamma = 0$$

Method 1 (Association Poles With Nodes)

$$\frac{v_{out}}{v_{in}} = \frac{1+\frac{C_{GS}S}{g_{m1}}}{\frac{R_S(C_{GS}C_L+C_{GS}C_{GD}+C_{GD}C_L)}{g_{m1}}S^2+\frac{g_{m1}R_SC_{GD}+C_L+C_{GS}}{g_{m1}}+1} \tag{63}$$

$$= \frac{1+\frac{C_{GS}S}{g_{m1}}}{\left(1+\frac{s}{\omega_{p1}}\right)\left(1+\frac{S}{\omega_{p2}}\right)} = \frac{1+\frac{C_{GS}S}{g_{m1}}}{\frac{S^2}{\omega_{p1}\omega_{p2}}+\left(\frac{1}{\omega_{p1}}+\frac{1}{\omega_{p2}}\right)S+1} \tag{64}$$

$$\omega_{p1} = \frac{g_{m1}}{g_{m1}R_SC_{GD}+C_L+C_{GS}} = \frac{1}{R_SC_{GD}+\frac{C_L+C_{GS}}{g_{m1}}} \quad \text{If } \omega_{p1} \ll \omega_{p2} \tag{65}$$

Cascode

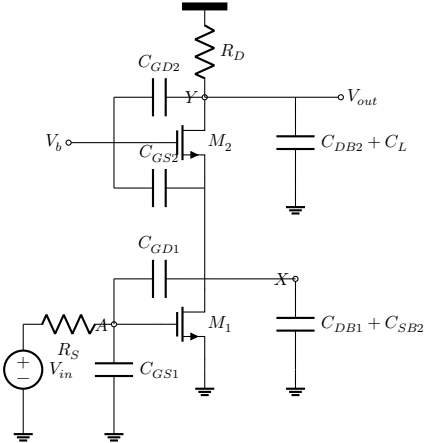

- No Miller multiplication of capacitance at the CG stage.
- Miller multiplication of capacitance suppressed at the CS stage.

$$\frac{X}{A} = -\frac{g_{m1}}{g_{m2} + g_{mb2}} \tag{66}$$

Cascode

$$\omega_{p,A} = \frac{1}{R_S\left[C_{GS1} + \left(1 + \frac{g_{m1}}{g_{m2}+g_{mb2}}\right)C_{GD1}\right]} \tag{67}$$

$$\omega_{p,X} = \frac{1}{\frac{1}{g_{m2}+g_{mb2}}\left[C_{DB1} + C_{SB2} + C_{GS2} + \left(1 + \frac{g_{m2}+g_{mb2}}{g_{m1}}\right)C_{GD1}\right]} \tag{68}$$

$$\omega_{p,Y} = \frac{1}{R_D\left[C_{GD2} + C_{DB2} + C_L\right]} \tag{69}$$

Cascode

$$\frac{v_{out}}{v_{in}} = -g_{m1}R_D \frac{1}{\left(1+\frac{s}{\omega_{p,A}}\right)\left(1+\frac{s}{\omega_{p,X}}\right)\left(1+\frac{s}{\omega_{p,Y}}\right)} \tag{70}$$

Recall for CS stages

$$\omega_{in} = \frac{1}{R_S\left[C_{GS} + \left(1+g_{m1}R_D\right)C_{GD}\right]} \tag{71}$$

Lecture 23: General Time Constant Approach

VE311 Electronic Circuits

Xuyang Lu
2023 Summer

上海交通大學
SHANGHAI JIAO TONG UNIVERSITY

Recap of Last Lecture

- Bandwidth estimation:
  - Solving for KCL and KVL
  - Miller effect + Pole associated with nodes

Topic to be Covered

- General Time constant approach

Cascode

$$\omega_{p,A} = \frac{1}{R_S\left[C_{GS1} + \left(1 + \frac{gm_1}{gm_2+gmb_2}\right)C_{GD1}\right]} \tag{1}$$

$$\omega_{p,X} = \frac{1}{\frac{1}{gm_2+gmb_2}\left[C_{DB1} + C_{SB2} + C_{GS2} + \left(1 + \frac{gm_2+gmb_2}{gm_1}\right)C_{GD1}\right]} \tag{2}$$

$$\omega_{p,Y} = \frac{1}{R_D\left[C_{GD2} + C_{DB2} + C_L\right]} \tag{3}$$

$$\frac{v_{\text{out}}}{v_{\text{in}}} = -gm_1 R_D \frac{1}{\left(1 + \frac{S}{\omega_{p,A}}\right)\left(1 + \frac{S}{\omega_{p,X}}\right)\left(1 + \frac{S}{\omega_{p,Y}}\right)} \tag{4}$$

Cascode

Recall for CS stages:

$$\omega_{\text{in}} = \frac{1}{R_S\left[C_{GS} + (1 + gm_1 R_D)\, C_{GD}\right]} \tag{5}$$

Cascode

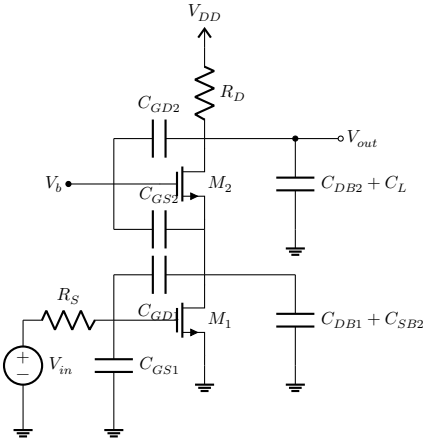
V_{DD}
R_D
C_{GD2}
V_{out}
V_b
M_2
C_{GS2}
$C_{DB2} + C_L$
R_S
C_{GD1}
M_1
$C_{DB1} + C_{SB2}$
V_{in}
C_{GS1}

First Order Systems

Read 10.1 and 10.4 for BJTs of Sedra Smith (OCTC & SCTC for UM VE311).
Hajimiri for General Method

- No energy is store in the circle. In general, a one pole one zero system
- $H(S) = \frac{a_0 + a_1 S}{1 + bS}$

First Order Systems

- The low frequency is represented by a_0
- $a_0 = H(s)\,|_{c_1=0} = H^\circ$
- The time constant determines b_1 (This is the pole of the system)
- $b_1 = \tau = RC_1$
- The ratio of a_0 and a_1 determines the location of the zero

First Order Systems

$$H(s) = \frac{a_0 + a_1 s + a_2 s^2 + \cdots + a_m s^m}{1 + b_1 s + b_2 s^2 + \cdots + b_n s^n} = a_0 \cdot \frac{\left(1 - \frac{s}{z_1}\right)\left(1 - \frac{s}{z_2}\right) \ldots \left(1 - \frac{s}{z_m}\right)}{\left(1 - \frac{s}{p_1}\right)\left(1 - \frac{s}{p_2}\right) \ldots \left(1 - \frac{s}{p_n}\right)} \tag{6}$$

$$b_1 = -\sum_i \frac{1}{p_i} \tag{7}$$

$$b_2 = \sum_i \sum_j^{i<j} \frac{1}{p_i p_j} \tag{8}$$

$$b_n = \frac{(-1)^n}{p_1 p_2 \cdots p_n} \tag{9}$$

$$b_1 = -\sum_i \frac{1}{p_i} \tag{10}$$

$$b_2 = \sum_i \sum_j^{i<j} \frac{1}{p_i p_j} \tag{11}$$

$$b_n = \frac{(-1)^n}{p_1 p_2 \cdots p_n} \tag{12}$$

First Order Systems

- $H(S) = \frac{a_0 + a_1 S}{1 + bS}$
- $H_i(s) = \frac{a_0 + \alpha_1^i C_i s}{1 + \beta_1^i C_i s}$
- (It is easy to convince ourselves that a_1 is also related to the capacitor. For a capacitor, $1/j\omega C$ means C and S always come together.)
- The transfer function shall be valid for all capacitor values including zero and infinity.
- the first denominator coefficient b_1, is simply given by the sum of these zero-value time constants (ZVT)
- $b_1 = \sum_{i=1}^{N} \tau_i^0$

First Order Systems

- $H_i(s) = \frac{a_0+\alpha_1^i C_i s}{1+\beta_1^i C_i s}$ If C_i goes to ∞, $\mathrm{H(s)} = \frac{\alpha_1}{\beta_1}$
- $H(s) = \frac{H^0+H^1\tau S}{1+\tau S}$
- If it is an inductor, $\tau = \frac{L_1}{R_0}$
- To find the time constant, remove the cap/ind nulling all the sources, find the resistance.
- To find transfer constant H^0, it is just the low frequency gain.
- To find the transfer constant H^1, we look into high frequency response, so the cap shall be shorted. For inductor it is the opposite.

First Order Systems

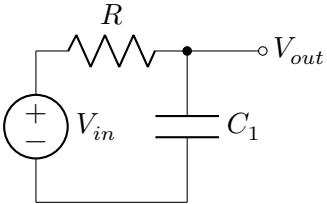

$$H^0 = 1 \tag{13}$$

$$\tau = RC_1 \tag{14}$$

$$H^1 = 0 \tag{15}$$

$$H(s) = \frac{1}{1 + RCS} \tag{16}$$

First Order Systems

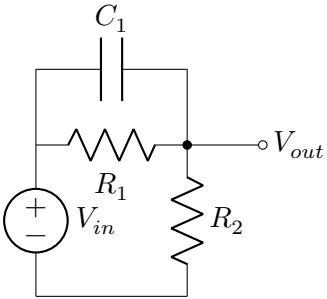

- We do zero frequency response to find out H^0
- $H^0 = \frac{R_2}{R_1+R_2}$
- We null sources to find τ_1
- $\tau_1 = (R_1 \parallel R_2)\, C_1$
- We short circuit to find H^1
- $H^1 = 1$
- $\mathrm{H(S)} = \frac{R_1}{R_1+R_2} \frac{1+\mathrm{R_2 C_1 S}}{1+(\mathrm{R_1 \| R_2})\mathrm{C_1 S}}$

First Order Systems

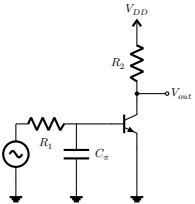

$$H^0 = -\frac{r_\pi}{R_1 + r_\pi} g_m R_2 \qquad (17)$$

$$\tau = (R_1 \parallel r_\pi)\, C_\pi \qquad (18)$$

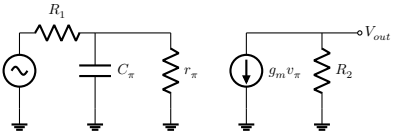

$$H^\pi = 0 \qquad (19)$$

$$H(S) = \frac{H^0}{1 + \tau S} \qquad (20)$$

If there is a zero in the system, then we can test it with a shorted cap / open ind and see if the output still have some value.

MOSFET T Model

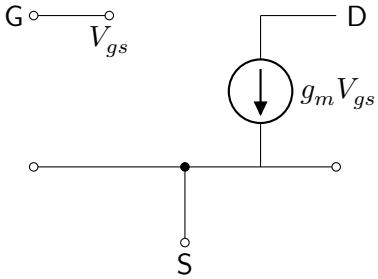

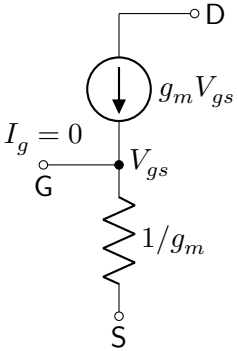

First Order Source Follower

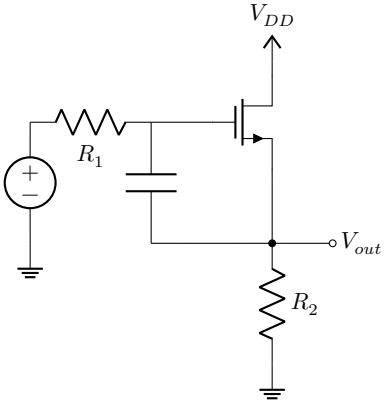

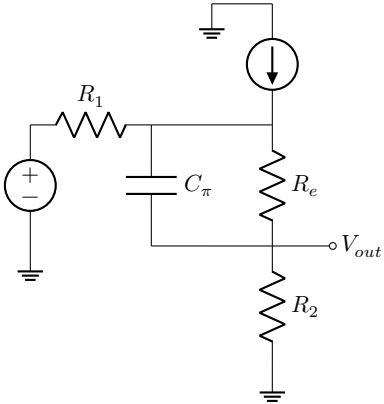

First Order Source Follower

- Low frequency, $V_x = V_{in}$
- V_{out} is voltage divider,
- $H^0 = \frac{R_2}{R_2+r_e}$ (assume it' s a BJT)
- $H^1 = \frac{R_2}{R_2+r_1}$
- $R_2\left(g_m v_x - i_x\right) + v_x = R_1 i_x$
- $R = \frac{R_1+R_2}{1+g_m R_2}$
- You can imagine the existence of a zero and a pole.

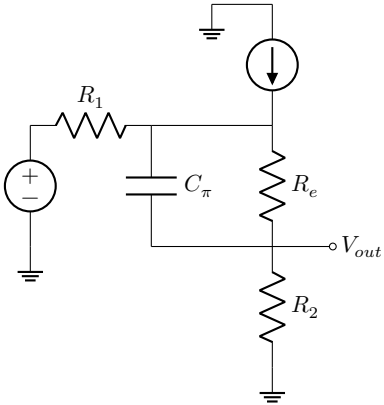

First Order Source Follower

$$H(s) = \frac{R_2}{R_2 + R_e} \cdot \frac{1 + \frac{R_e + R_2}{R_1 + R_2} \cdot \frac{R_1 + R_2}{1 + g_e R_2} C_\pi S}{1 + R_\pi^0 C_\pi S} \tag{21}$$

$$= \frac{R_2}{R_2 + r_e} \cdot \frac{1 + r_e C_\pi S}{1 + R_\pi^0 C_\pi S} \tag{22}$$

- $Z = -\frac{g_m}{C_\pi}$ @ high frequency
- $P = -\frac{1}{R_\pi^0 C_\pi}$ @ high frequency
- Therefore, source follower is quite wide band

First Order Common Source

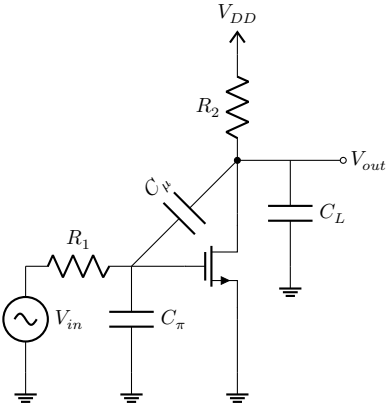

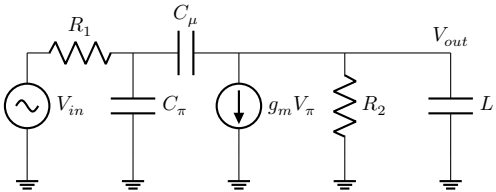

First Order Common Source

- $R_\pi^0 = r_\pi \parallel \frac{R_1+R_2}{1+g_m R_2}$
- $R_\mu^0 = R_{\text{left}} + R_{\text{right}} + G_m R_{\text{left}} R_{\text{right}}$
- For BJT we have $R_{\text{left}} = R_B \parallel [r_\pi + (1+\beta)R_E]$
- $R_{\text{right}} = R_3$
- $G_m = \frac{g_m}{1+g_m R_2}$
- $R_\theta^0 \approx \frac{R_2+R_3}{1+g_m R_2}$
- $b_1 = \sum_{i=1}^{N} \tau_i^0$

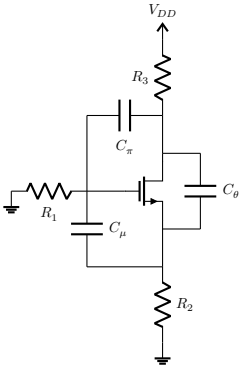

First Order Common Source

$$R_\theta^0 \approx \frac{R_2 + R_3}{1 + g_m R_2} \tag{23}$$

First Order Common Source

$$R_{\text{left}} = R_B \parallel [r_\pi + (1+\beta)R_E] \tag{24}$$

First Order Common Source

.model Q2N696 NPN (Is=14.34f Xti=3 Eg=1.11 Vaf=74.03 Bf=65.62 Ne=1.208 Ise=19.48f Ikf=.2385 Xtb=1.5 Br=9.715 Nc=2 Isc=0 Ikr=0 Rc=1 Cjc=9.393p Mjc=.3416 Vjc=.75 Fc=.5 Cje=22.01p Mje=.377 Vje=.75 Tr=58.98n Tf=408.8p Itf=.6 Vtf=1.7 Xtf=3 Rb=10)
.model NPN NPN
.model PNP PNP
cje Zero bias B-E depletion capacitance

First Order Common Source

We can use those parameters to determine small signal parameters. a collector current of 1mA which give you a $Gm = 40mS \quad \beta_0 = 100$

$$C_\pi = C_{je} + C_b = 100\text{fF} \tag{25}$$

$$C_L = C_{out} + C_{js} = 200\text{fF} \tag{26}$$

$$C_u = g_m \tau_F = 16fF \tag{27}$$

$$R_1 = 1K\Omega \tag{28}$$

$$R_2 = 1K\Omega \tag{29}$$

$$r_\pi = \frac{\beta + 1}{\text{gm}} = \frac{101}{40} \approx 2500\Omega \tag{30}$$

$$R_{\text{left}} = R_B \parallel [r_\pi + (1+\beta)R_E] = \tag{31}$$

$$1\text{K} \parallel (2.5\text{K} + (101)^*0) = 0.7\text{K} \tag{32}$$

$$R_\mu^0 = R_{\text{left}} + R_{\text{right}} + G_m R_{\text{left}} R_{\text{right}} \tag{33}$$

$$= 0.7\text{K} + 2\text{K} + 40\text{e} - 3^*0.7\text{K} * 2\text{K} \tag{34}$$

First Order Common Source

$$b_1 = \sum_i \tau_i^0 = \tau_\pi^0 + \tau_\mu^0 + \tau_L^0 \tag{35}$$

$$H^0 = -57 \tag{36}$$

$$\tau_\pi^0 \approx 70\text{ps} \quad \tau_\mu^0 \approx 1000\text{ps} \quad \tau_L^0 = 400\text{ps} \tag{37}$$

$$\omega_h \approx 1/b_1 \approx 2\pi \cdot 95\text{MHz} \tag{38}$$

- This allows you to determine the lowest operating frequency, and also the contribution of each nodes in the circuit.

Practice on BJT Case

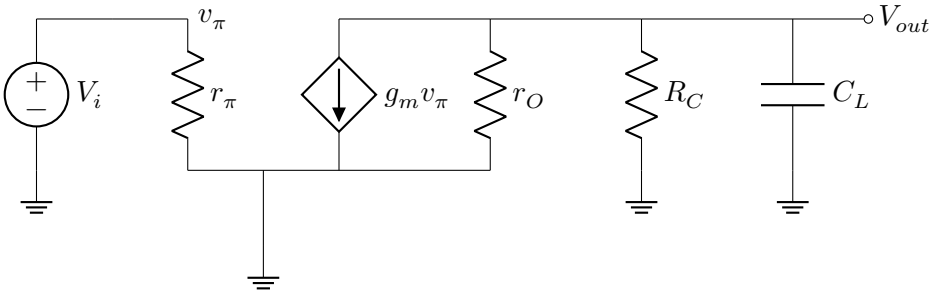

Practice on BJT Case

$$g_m v_i + \frac{v_0}{r_0 \parallel R_c} + v_0 S C_L = 0 \quad (39)$$

$$g_m v_i + v_0 \frac{1 + r_0 \parallel R_c S C_L}{r_0 \parallel R_c} = 0 \quad (40)$$

$$v_0 = -g_m \frac{r_0 \parallel R_c}{1 + r_0 \parallel R_c S C_L} v_i \quad (41)$$

- Single pole at :
- Often $r_O >> RC$

Lecture 24

VE 311 Analog Circuits

Xuyang Lu
2023 Summer

上海交通大學
SHANGHAI JIAO TONG UNIVERSITY

Recap of Last Lecture

- General Time constant approach

Topics to Be Covered

- General Time constant approach
- Biasing Circuit: Review and Insight

Further discussion on P and Z

- $H(s) = \frac{H^0 + H^1 \tau s}{1+\tau s} = H^\circ \frac{1+\frac{H^1}{H^0}\tau s}{1+\tau s}$
- $P = -\frac{1}{\tau}$
- $Z = -\frac{1}{H^1} = \frac{H^0}{H^0}\tau\left(-\frac{1}{\tau}\right)$
- $Z = \frac{H^0}{H^1}P$
- This tells us that we can look at the sign of H0 and H1 to infer the location of zeros and poles
- The ratio also tells whether poles or zeros come earlier.

Further discussion on P and Z

	$\lvert\frac{H_0}{H_1}\rvert < 1$	$\lvert\frac{H_0}{H_1}\rvert > 1$
$\frac{H_0}{H_1} > 0$	P and Z in same half plane $\lvert\frac{Z}{P}\rvert < 1$	P and Z in same half plane $\lvert\frac{Z}{P}\rvert > 1$
$\frac{H_0}{H_1} < 0$	P and Z in opposite half planes $\lvert\frac{Z}{P}\rvert < 1$	P and Z in opposite half planes $\lvert\frac{Z}{P}\rvert > 1$

Further discussion on P and Z

$$H(s) = \frac{H^0 + H^1 \tau S}{1 + \tau S} = H^0 \frac{1}{1 + \tau S} + H^1 \frac{\tau S}{1 + \tau S} \tag{1}$$

Low path filter High path filter

$$s(t) = H^0 \left(1 - e^{-t/\tau}\right) u(t) + H^1 e^{-t/\tau} u(t) \tag{2}$$

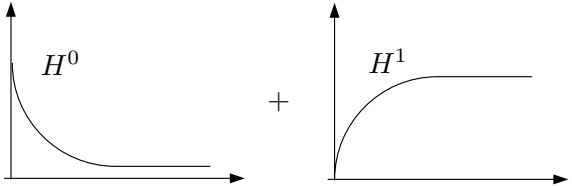

The final waveform also tells you the existence of poles and zeros.

Further discussion on P and Z

Transient Simulation

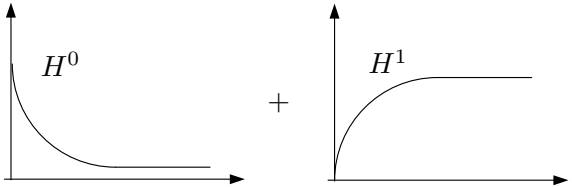

	$\lvert\frac{H_0}{H_1}\rvert < 1$	$\lvert\frac{H_0}{H_1}\rvert > 1$
$\frac{H_0}{H_1} < 0$	P and Z in opposite HP $\lvert Z\rvert < \lvert P\rvert$	P and Z in opposite HP $\lvert Z\rvert > \lvert P\rvert$

Further discussion on P and Z

	$\lvert\frac{H_0}{H_1}\rvert < 1$	$\lvert\frac{H_0}{H_1}\rvert > 1$
$\frac{H_0}{H_1} < 0$	P and Z in opposite HP $\lvert Z\rvert < \lvert P\rvert$	P and Z in opposite HP $\lvert Z\rvert > \lvert P\rvert$

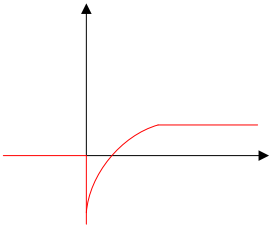

Opposite sign resulting in undershoot, left half plane pole and right half-plane zero.

Further discussion on P and Z

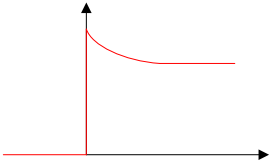

$$0 < \frac{H_0}{H_1} < 1$$

Left half plane low frequency zero that happens before the pole in a first order system.

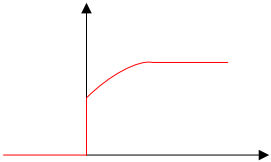

$$1 < \frac{H_0}{H_1}$$

Zero happens after the pole freq.

Nth order system

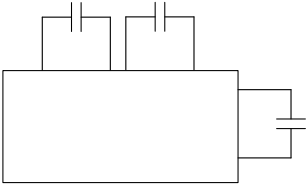

$$H(s) = \frac{a_0 + a_1 S + a_2 S^2 + ...}{1 + b_1 S + b_2 S^2 + ...} \tag{3}$$

- Only the caps and inductors produces S.
- To get a_1 we have to have a cap (or inductor)

Nth order system

- We can also infer that the s^2 term comes from two capacitors.
- $H(s) = \frac{a_0+\left(\sum_{i=1}^{N} \alpha_1^i C_i\right)s+\left(\sum_i^{1\leqslant i<j\leqslant N} \alpha_j^{ij} C_i C_j\right)s^2+...}{1+\left(\sum_{i=1}^{N} \beta_1^i C_i\right)s+\left(\sum_i^{1\leqslant i<j\leqslant N} \sum_j^{ij} \beta_2^{ij} C_i C_j\right)s^2+...}$
- If we set all c's except ci as zeros
- $H_i(s) = \frac{a_0+\alpha_1^i C_i s}{1+\beta_1^i C_i s}$
- $\tau_i^0 = R_i^0 C_i$
- $\beta_1^i = R_i^0$
- $b_1 = \sum_{i=1}^{N} \tau_i^0$

N th order system

- $b_1 = \sum_{i=1}^{N} \tau_i^0$
- coefficient b_1 is the sum of all zero valued time constant.
- $a_1 = \sum_{i=1}^{N} \tau_i^0 H^i$
- This allows us to find out the dominant time constant.

N th order system

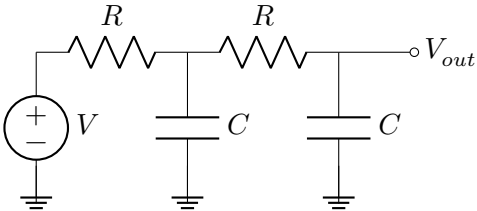

It is a two cap system, therefore the number of poles are two.
It is a system with an infinite response of zero if we short both capacitors, so there is no zeros.

Nth order system

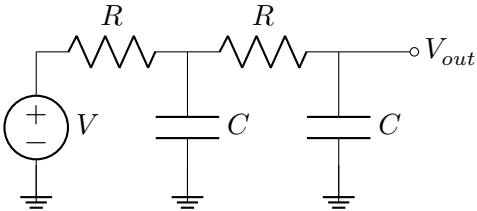

- $H(S) = \frac{1}{1+3RCS+(RC)^2S^2}$
- $b_1 = \sum_{i=1}^{N} \tau_i^0 = \tau_1^0 + \tau_2^0$
- $\tau_1^0 = RC$
- $\tau_2^0 = 2RC$
- $b_1 = 3R_c$

Nth order system

$$H(S) = \frac{1}{1 + 3RCS + (RC)^2 S^2} \tag{4}$$

- If the impedance seen by one cap does not change as we open or short the other cap, we say that the two-time constant are uncoupled to each other, and the expression can be written as

$$H(s) = \frac{H^0}{(1 + \tau_1 S)(1 + \tau_2 S)} \tag{5}$$

Nth order system

$$H(S) = \frac{1}{1 + 3RCS + (RC)^2 S^2} \tag{6}$$

- We now have the $3RC$ term. The question is whether it is true in this case to determine $(RC)^2 S^2$

$$H(s) = \frac{1}{(1 + \tau_1^0 s)(1 + \tau_2^0 s)} = \frac{1}{1 + (\tau_1^0 + \tau_2^0) s + \tau_1^0 \tau_2^0 s^2} \tag{7}$$

$$\tau_1^0 \tau_2^0 = 2(RC)^2 \tag{8}$$

N th order system

We now know how to calculate a_1, b_1, and a_0.

$$H(s) = \frac{a_0 + \left(\sum_{i=1}^{N} \alpha_1^i C_i\right) s + \left(\sum_{i}^{1 \leqslant i < j \leqslant N} \alpha_j^{ij} C_i C_j\right) s^2 + \ldots}{1 + \left(\sum_{i=1}^{N} \beta_1^i C_i\right) s + \left(\sum_{i}^{1 \leqslant i < j \leqslant N} \sum_j \beta_2^{ij} C_i C_j\right) s^2 + \ldots} \tag{9}$$

A_0 is the zero frequency response. B_1 is the summation of time constant A_1 can be obtained from infinite time response.

Nth order system

$$b_2 = \sum_{i}^{i<j<N} \sum_{j}^{0} \tau_j^i \tag{10}$$

- That means you don't repeat $\tau 12$ and $\tau 21$
- τ_j^i means the time constant of element j when element I is infinite frequency

$$a_2 = \sum \sum_{j}^{i<j<N} \tau_i^0 \tau_j^i H^{ij} \tag{11}$$

- We can expect b_n is a multiple summation of the product of many time constants

Nth order system

$$H(s) = \frac{a_0 + a_1 s + a_2 s^2}{1 + b_1 s + b_2 s^2} \tag{12}$$

$$H(s) = \frac{H^0 + (H^1 R_1^0 C_1 + H^2 R_2^0 C_2)s + (\alpha_2^{12} C_1 C_2)s^2}{1 + (R_1^0 C_1 + R_2^0 C_2)s + (\beta_2^{12} C_1 C_2)s^2} \tag{13}$$

- We notice that relabeling C_1 as C_2 and vice versa should not change the derived transfer function.
- So that $\alpha_2^{12} = \alpha_2^{21}$ and $\beta_2^{12} = \beta_2^{21}$
- R_2^1 is the resistance seen by C_2 (the subscript) when C_1 (the superscript) is infinite valued (shorted).

Nth order system

$$H(s) = \frac{H^0 + (H^1 R_1^0 C_1 + H^2 R_2^0 C_2)s + (\alpha_2^{12} C_1 C_2)s^2}{1 + (R_1^0 C_1 + R_2^0 C_2)s + (\beta_2^{12} C_1 C_2)s^2} \tag{14}$$

I want to determine the value of α_2^{12} and β_2^{12}.
It should be valid for $C_1 \to \infty$.
If I short C_1, $C_1 \to \infty$.

$$H(s)|_{C_1 \to \infty} = \frac{C_1 s \cdot (H^1 R_1^0 + \alpha_2^{12} C_2 s)}{C_1 s \cdot (R_1^0 + \beta_2^{12} C_2 s)} = H^1 \cdot \frac{1 + \frac{\alpha_2^{12}}{H^1 R_1^0} C_2 s}{1 + \frac{\beta_2^{12}}{R_1^0} C_2 s} \tag{15}$$

It should be the same as a 1 cap system.
Therefore, $\beta_2^{12} = R_1^0 R_2^1$ and $b_2 = R_1^0 C_1 R_2^1 C_2 = \tau_1^0 \tau_2^1$.

Nth order system

$$H(s) = \frac{H^0 + (H^1 R_1^0 C_1 + H^2 R_2^0 C_2)s + (\alpha_2^{12} C_1 C_2)s^2}{1 + (R_1^0 C_1 + R_2^0 C_2)s + (\beta_2^{12} C_1 C_2)s^2} \tag{16}$$

We determine a_2 in by setting both C_1 and C_2 to infinity

- $C_1 \to \infty$ and $C_2 \to \infty$, $H^{12} = \frac{\alpha_2^{12}}{\beta_2^{12}}$
- $\beta_2^{12} = R_1^0 R_2^1$
- Therefore, $\alpha_2^{12} = R_1^0 R_2^1 H^{12}$.
- $a_2 = R_1^0 C_1 R_2^1 C_2 H^{12} = \tau_1^0 \tau_2^1 H^{12}$
- H_{12} is the low-frequency input-output transfer constant with the reactive elements 1 and 2 at their infinite value (C_1 and C_2 shorted).

Nth order system

- $b_2 = \tau_1^0 \tau_2^1 = \tau_2^0 \tau_1^2$
- $a_2 = \tau_1^0 \tau_2^1 H^{12} = \tau_2^0 \tau_1^2 H^{12}$
- $b_1 = \tau_1^0 + \tau_2^0$
- $a_1 = \tau_1^0 H^1 + \tau_2^0 H^2$

Nth order system

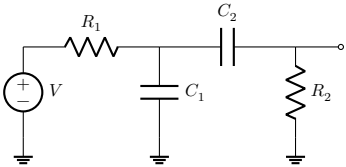

- Two pole and one zero
- How do we test this?
- $H^0 = 0$
- $\tau_1^0 = R_1 C_1$
- $\tau_2^0 = (R_1 + R_2) C_2$

Nth order system

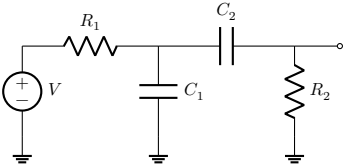

- $\tau_2^1 = R_2 C_2$
- $\tau_1^2 = (R_1 \parallel R_2)\, C_1$
- $\tau_1^0 \tau_2^1 = R_1 C_1 R_2 C_2 = \tau_2^0 \tau_1^2$
- $\tau_2^0 \tau_1^2 = (R_1 + R_2)\, C_2 \frac{R_1 R_2}{R_1 + R_2} C_1$
- $\tau_2^0 = (R_1 + R_2)\, C_2$

- $H^1 = 0$
- $H^2 = \frac{R_2}{R_2 + R_1}$
- $H^{12} = 0$

$$H(s) = \frac{R_2 C_2 S}{1 + (R_1 C_1 + R_1 C_2 + R_2 C_2)\, S + R_1 C_1 R_2 C_2 S^2} \tag{17}$$

Nth order system

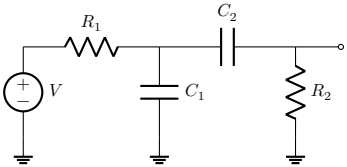

- $H(s) = \frac{a_0+a_1 s+a_2 s^2}{1+b_1 s+b_2 s^2}$
- $b_2 = \tau_1^0 \tau_2^1 = \tau_2^0 \tau_1^2$
- $a_2 = \tau_1^0 \tau_2^1 H^{12} = \tau_2^0 \tau_1^2 H^{12}$
- $b_1 = \tau_1^0 + \tau_2^0$
- $a_1 = \tau_1^0 H^1 + \tau_2^0 H^2$

Nth order system

- Two poles and one zero
- $H^0 = \frac{R_2}{R_2+r_m}$
- $\tau_\pi^0 = C_\pi \frac{R_1+R_2}{1+g_m R_2}$
- $\tau_\mu^0 = C_\mu R_1$
- $\tau_\mu^\pi = C_\mu (R_1 \parallel R_2)$
- $H^\mu = 0$
- $H^\pi = \frac{R_2}{R_1+R_2}$
- $H^{\mu\pi} = 0$

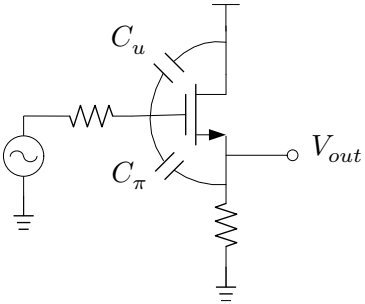

Nth order system

- Now we can write out the transfer function. If we assume that $R_2 >> R_1$
- And $R_2 >> R_m$

$$H^0 = \frac{R_2}{R_2 + r_m} \tag{18}$$

$$\tau_\pi^0 = C_\pi \frac{R_1 + R_2}{1 + g_m R_2} = r_m C_\pi \tag{19}$$

$$\tau_\mu^0 = C_\mu R_1 \tag{20}$$

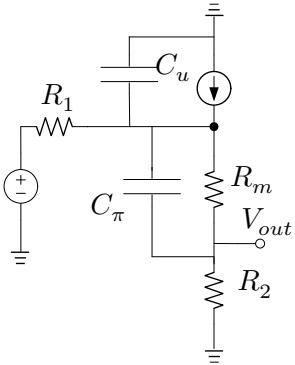

Nth order system

$$\tau_\mu^\pi = C_\mu \left(R_1 \parallel R_2\right) = C_\mu R_1 \tag{21}$$

$$H^\mu = 0 \tag{22}$$

$$H^\pi = \frac{R_2}{R_1 + R_2} \tag{23}$$

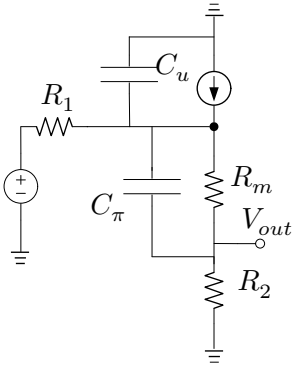

Nth order system

$$\tau_\pi^0 \tau_\mu^\pi = r_m R_1 C_\pi C_\mu \tag{24}$$

$$H^\pi \tau_\pi^0 = r_m C_\pi \frac{R_2}{r_m + R_2} = H^0 r_m C_\pi \tag{25}$$

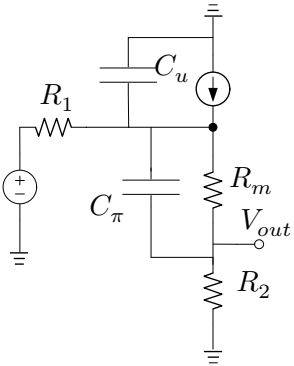

$$H(S) = H^0 \frac{1 + r_m C_\pi S}{1 + \left(r_m C_\pi + R_1 C_\mu\right) S + r_m C_\pi R_1 C_\mu S^2} \tag{26}$$

Nth order system

$$H(S) = H^0 \frac{1 + r_m C_\pi S}{1 + \left(r_m C_\pi + R_1 C_\mu\right) S + r_m C_\pi R_1 C_\mu S^2} = \frac{H^0}{1 + R_1 C_\mu S} \tag{27}$$

- This essentially tells us the dominate pole is the C_μ, because C_π shares current between the capacitor and the resistor, so that it tells us to improve the bandwidth of operation, we need to use a inductor or some topology to cancel the effect of C_μ

Bandwidth Estimation

- The whole system can be expressed as the product of a high pass and a low pass transfer function.
- If I'm designing an analog circuit, I can use transfer function to estimate bandwidth, assuming I care about the lowpass one.
- For low frequency system, in many cases we can assume a zeroless system.
- For example, in common-source stage and the source-follower stage, the zero's frequencies are comparable to the cut-off frequency of the transistor itself

Bandwidth Estimation

- $H(s) \approx \frac{a_0}{1+b_1 s+b_2 s^2+...+b_n s^n}$
- At dc $(\omega = 0)$, the only term in the denominator that matters is the leading 1.
- As the frequency goes up and starts approaching the wh, the first term that becomes non-negligible would be $b1$, so in the vicinity of the ωh
- The system is pretty much
- $H(s) \approx \frac{a_0}{1+b_1 s}$
- This tells us, in order to find out the cutoff frequency,
- We calculate b1

Bandwidth Estimation

- $\omega_h \approx \frac{1}{b_1} = \frac{1}{\sum_{i=1}^{N} \tau_i^0}$
- $\frac{a_1}{1+b_1 S+b_2 S^2} \Rightarrow H(j\omega) = \frac{a_0}{(1-b_2\omega^2)+j\omega b_1}$
- It is a conservative estimation of bandwidth