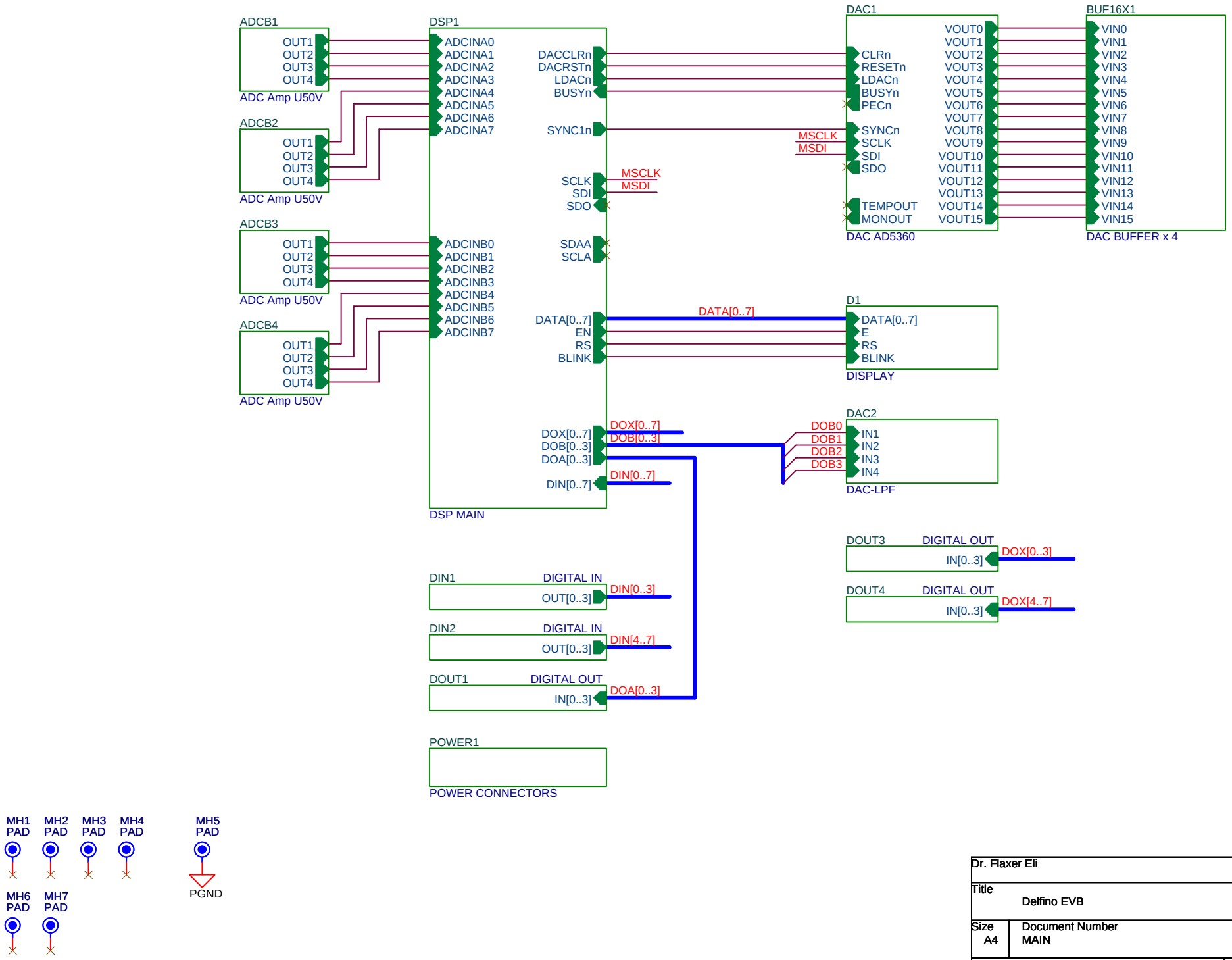

Dr. Flaxer Eli		
Title: Delfino EVB		
Size: A4	Document Number: MAIN	Rev: 2.0
Date: Friday, December 13, 2013	Sheet 1 of 35	

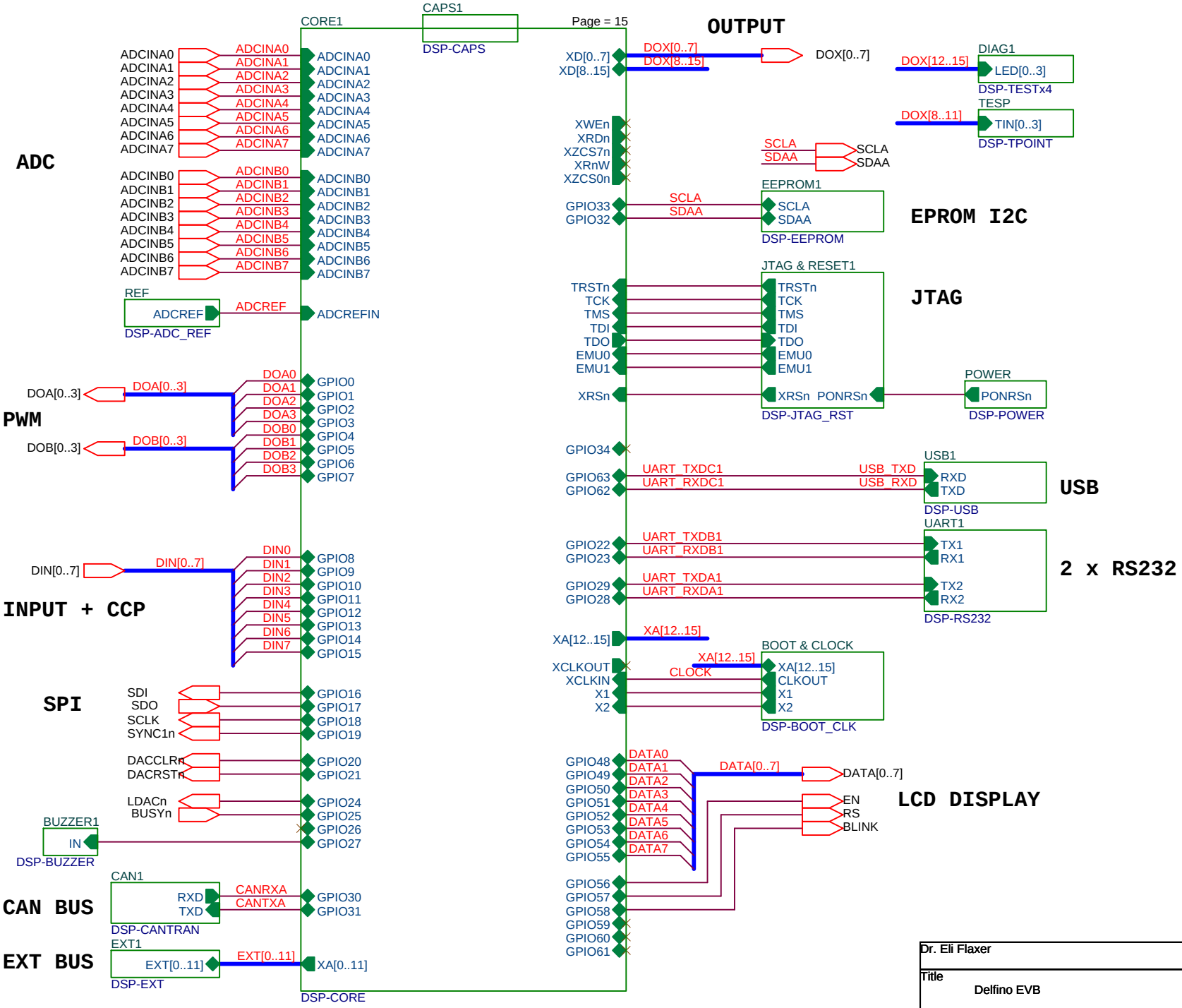

Dr. Eli Flaxer		
Title: Delfino EVB		
Size: A4	Document Number: DSP - All Components	Rev: 1.0
Date: Friday, December 13, 2013	Sheet 20 of 35	