Empowering Women Safety: A GPS-Enabled IoT Tracking System

Boomika A
Department of Electronics Engineering
Madras Institute of Technology,
Anna University
Chennai, India
boomikaanbalagan@gmail.com

Divyapriya E
Department of Electronics Engineering
Madras Institute of Technology,
Anna University
Chennai, India
divyapriyadivya03@gmail.com

Vanathi K
Department of Electronics Engineering
Madras Institute of Technology,
Anna University
Chennai, India
Vanathikarnan@gmail.com

Vidhya N
Department of Electronics Engineering
Madras Institute of Technology,
Anna University
Chennai, India
vin.vidhya612@gmail.com

Parameswaran Ramesh
Department of Electronics Engineering
Madras Institute of Technology,
Anna University
Chennai, India
parameswaran0789@gmail.com

Bhuvaneswari P.T.V
Department of Electronics Engineering
Madras Institute of Technology,
Anna University
Chennai, India
ptvbmit@annauniv.edu

2024 International Conference on Emerging Trends in Networks and Computer Communications (ETNCC) | 979-8-3503-5326-6/24/$31.00 ©2024 IEEE | DOI: 10.1109/ETNCC63262.2024.10767557

Abstract— **Safeguarding the well-being of women emerges as a critical concern in contemporary society. This research introduces an innovative solution that amalgamates Internet of Things (IoT) technology with Global Positioning System (GPS) tracking to address the above issue. The proposed solution entails a compact and user-friendly IoT button with GPS capabilities, specifically crafted to augment the safety and security of women across diverse scenarios. Serving as a discreet and easily transportable device, the GPS tracking button, rooted in IoT technology, can be conveniently carried by individuals. Upon activation, the button employs GPS technology to accurately ascertain the location of Users. Seamless integration with a dedicated mobile application ensures the provision of real-time location data and immediate alerts to predetermined contacts or authorities. This technology-centric approach for the safety of women seeks to furnish them with a proactive and responsive tool, ultimately fortifying their personal security. The incorporation of state-of-the-art technology assures the dependability and efficacy of this solution in addressing safety concerns, contributing to the continual endeavors to establish safer environments for women.**

Keywords: Women's safety, Internet of Things (IoT), Global Positioning System (GPS), Tracking system, Personal security.

I. Introduction

The Internet of Things (IoT) revolutionizes daily living through its intelligent features. Unlike conventional embedded systems, which are confined to predetermined protocols or software within the chip, IoT devices empower themselves to make decisions based on the information they gather from their surroundings. Advances in sensor technology, the prevalence of internet-connected devices, and sophisticated data analysis algorithms enable IoT devices to autonomously respond intelligently in emergency situations without the need for human intervention. Therefore, IoT devices are utilized across a multitude of sectors, spanning agriculture, healthcare, industry, security, and communication, highlighting their broad applicability and significant contributions.. In contemporary times, digital technology plays a pivotal role in facilitating connections between individuals through the internet. The internet serves as a medium that links various components through a singular device, establishing connectivity with a server [1].

Ensuring the safety of women has emerged as a significant concern in the contemporary global landscape. The world is becoming increasingly precarious for women, especially considering the rising number of women venturing out for work at any time of the day. Despite the implementation of various technologies aimed at enhancing women's safety, our nation continues to grapple with incidents such as kidnapping, eve-teasing, and sexual harassment. Notably, there has been a concerning increase in crimes against women[2] in recent years, indicating the urgency for more effective measures to address these challenges. In the absence of a mobile phone or device, a woman may face challenges in reaching out to the police station or her family. The suggested approach aims to assist women in determining their precise location and notifying the police station under such circumstances. In case of emergencies, women can press a button once their location information is traced. The primary objective of this research is to provide support to women during critical situations [3].

Hence, this research suggests a solution for difficult scenarios such as working unconventional hours, solo travel, and night shifts. The proposed system bears resemblance to existing systems while introducing supplementary features like Short Messaging Service (SMS) and real-time assistance, including position tracking through Global Positioning System (GPS) and Global System for Mobile Communication (GSM) [4]. It provides a comprehensive suite of services covering voice and data transmission, comprising Tele-services, bearer services, and supplementary services. Primarily utilized for voice transmission and messaging, GSM establishes a connection between two users by connecting the mobile node to a nearby Base Station (BS). The Base Switching Center (BSC) facilitates communication between the BS of the calling user and the nearby BS of the recipient, establishing connection between the two users in a matter of seconds [5].

GPS is an extensive navigation system that relies on a network of at least 24 satellites. Operating without any subscription fees or setup charges, GPS functions in all weather conditions, globally, around the clock, seven days a

979-8-3503-5326-6/24/$31.00 ©2024 IEEE

Authorized licensed use limited to: ANNA UNIVERSITY. Downloaded on December 05,2024 at 05:22:20 UTC from IEEE Xplore. Restrictions apply.

week. It receives information from satellites presented as an National Marine Electronics Association (NMEA) string, containing data such as latitude, longitude, altitude, Coordinated Universal Time (UTC) time, and additional information [6].

The subsequent sections of the article will explore the literature related to similar topics in Section II, present the proposed methodology in Section III, demonstrate the outcomes alongside location details in Section IV, and discuss the contribution and future prospects of the suggested work in Section V.

II. Literature Survey

Nandini Priyanka et al [7] proposed a child safety system to address threats to child safety. The system combined GSM and GPS modules for communication between a safety gadget and a parental phone. It also included a Wi-Fi module for IoT use, sending data to the cloud for monitoring via an Android app on the parental phone. The Android app allowed real-time tracking of the gadget's location using location coordinates or SMS requests. Additionally, there was a panic alert system that automatically sent SMS alerts and phone calls during emergencies, notifying parents for immediate help. Furthermore, the system monitored plug and unplug events, sending alerts and updating the cloud when the gadget was detached from the child's hand. The paper's novelty lay in its automatic alert system, ensuring quick notification to parents or caregivers during emergencies, thereby improving child safety measures.

Vijayalakshmi et al [8] addressed the urgent issue of women's security through the development of an advanced system. The model she proposed integrated second-generation GPS and GSM digital mobile telecommunication technologies. GSM was primarily utilized for voice transmission and messaging, establishing connections through nearby base stations and the BSC (Base Switching Center) for swift connectivity, including prioritized emergency communication. This system offered advantages such as global wireless connectivity, enhanced frequency efficiency, and simultaneous user access. To bolster women's safety, the system included features like GPS for accurate location tracking, street image-based location detection, and sensor-based strategies. Additionally, Wi-Fi, often integrated with modules like ESP8266, ensured dependable internet connectivity and seamless cloud data transmission. The paper's innovation was evident in its comprehensive approach to addressing women's safety concerns by integrating various technologies into a robust solution.

Nagarjuna Telagam et al [9] aimed to rectify the shortcomings of existing women's alert systems by proposing an innovative solution. Their research primarily focuses on mitigating the challenges encountered by traditional SOS-based setups, such as potential phone loss or battery depletion. The proposed system introduces a central Arduino microcontroller to efficiently manage communication and response analysis. This system model seamlessly integrates GSM and GPS modules to ensure smooth connectivity and setup prior to user activation. Through manual device switching, the system facilitates image capture using a connected camera and GPS-based location tracking. Consequently, the GSM module transmits captured images and location data to designated contacts, including emergency services, via SMS and email. Moreover, with a TTL module facilitating data exchange between GSM and GPS, their approach offers a comprehensive fusion of hardware components and communication protocols. This integrated solution represents a significant advancement in overcoming the limitations of current women's alert systems.

Shubham Gupta et al [10] introduced an innovative gadget that addressed the urgent issue of women's safety. Integrated with an Arduino-based controller, MCU 8266 for Wi-Fi connectivity, a pepper spray balloon, and GSM/GPRS modules, this gadget resides within a glove. Activation is achieved by pressing an artificial nail button, triggering the device to swiftly dispatch a distress message along with the victim's location to nearby volunteers, ensuring prompt assistance. Additionally, it dispensed pepper spray for added protection and efficiently managed GSM messages via an Android app. The system offered advantages such as swift emergency response and seamless location sharing with close contacts. The novelty of the paper lay in its comprehensive approach, merging hardware, app, and Firebase integration to effectively address women safety.

Ebenezer, V et al [11] addressed the issue of women's safety by developing a comprehensive safety system that integrated pulse, temperature, and vibration sensors, along with an ESP32 cam and GPS modules. Their system, which provided temperature readings in both Fahrenheit and Celsius and tracked pulse waves, utilized the BLYNK app to update user information, such as pulse and temperature, whenever the app was accessed. Google Maps continuously monitored the user's location. Vibration sensors detected any unusual movements, triggering notifications to well-wishers through the BLYNK app, allowing for real-time incident monitoring. This system, known for its compact, user-friendly, and cost-effective design, operated seamlessly without requiring manual activation during emergencies, marking a significant departure from existing solutions. The paper introduced an innovative approach to women's safety by combining various sensors with real-time data updates and notifications to significantly enhance users' safety and security.

Sindhu Bala et al [12] presented a cutting-edge solution focused on enhancing women's safety, by swiftly capturing and uploading images and audio of potential threats to the cloud. While it boasted advanced capabilities, the system's precautionary measures were minimal, relying on technologies like SOS messages, GSM, and Wi-Fi for communication. It employed diverse techniques, including manual button presses and automated detection systems, utilizing temperature and heartbeat sensors to assess conditions and sound detectors to recognize voice variations during threats. Offering proactive threat detection and swift data transmission, it ensured comprehensive coverage, even in areas with limited connectivity. Its innovative integration of various sensors and communication technologies represented a significant advancement in addressing women's safety concerns, distinguishing it as a pioneering effort in the field.

The literature highlights various constraints, such as potential wear and tear on safety gloves and wristbands, impacting their durability. It's imperative to ensure these devices can withstand diverse environmental conditions. Additionally, user comfort is crucial; bulky or uncomfortable devices, especially for children, may not be consistently worn. Compatibility issues may arise if gadgets are not

Authorized licensed use limited to: ANNA UNIVERSITY. Downloaded on December 05,2024 at 05:22:20 UTC from IEEE Xplore. Restrictions apply.

seamlessly integrated with existing child safety systems or lack standardization in communication protocols.

To address these limitations, the focus is on enhancing device durability and comfort. Advanced materials and ergonomic designs are employed to bolster device resilience and improve user acceptance. There's also a push for seamless integration with existing safety systems and advocating for standardization in communication protocols to foster compatibility. This approach is novel in its holistic consideration of both technical and user-centric aspects, aiming to overcome barriers hindering widespread adoption of safety devices.

III. Proposed Methodology

A. System model

Figure 1 illustrates the system architecture of the proposed methodology. It comprises various components namely Neo6M GPS module [13], GSM SIM800L , Arduino Nano [14], and a push button . Initially, all these components are powered by an external power supply which can be Battery. In a critical situation, when an individual finds themselves in danger, they are required to press the Save Our Souls (SOS) button. Subsequently, the GPS module tracks the location of the victim and transmits it to pre-programmed contact numbers using the GSM SIM800L module.

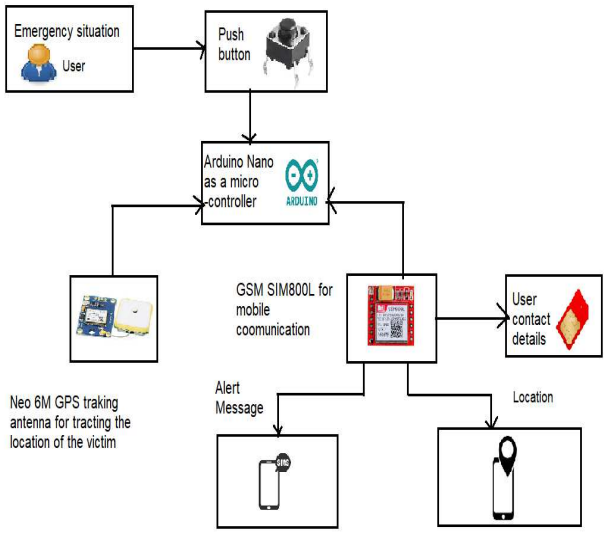

Fig. 1 Architecture Diagram of Proposed System

B. Schematic Diagram

The provided system architecture diagram in Figure 2 offers a schematic representation of the proposed setup. It establishes connections between the Arduino Nano, GSM SIM800L, and GPS module as follows: the TX pin of the GPS module connects to the RX pin of the Arduino, while the RX pin of the GPS module links with the TX pin of the Arduino Nano. Additionally, the TX and RX pins of the GSM module are interconnected with digital pins on the Arduino Nano. Both the VCC and ground pins of the GPS and GSM modules are appropriately linked to corresponding pins on the Arduino. Moreover, the push button interfaces with the analog pins of the Arduino.

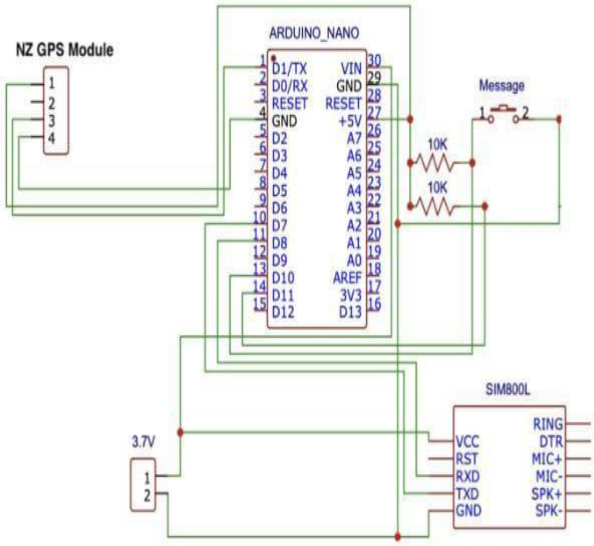

Fig. 2 Schematic Diagram of the Proposed System

The procedure involved in the proposed system is given below:

Algorithm: GPS Tracking System

1. Activate GPS Tracking IoT Button
2. Verify Button Activation
3. If Button is Pressed:
   a. Activate GPS Antenna
   b. Transmit Location and Alert Message
   c. Enable Location Access for Authorities
4. End

The operational procedure of the algorithm involves activating the GPS tracking system by pressing the IoT button. Upon button press, the system verifies the action and activates the GPS antenna to pinpoint the victim's location with latitude and longitude coordinates. Subsequently, the system transmits this location data along with an alert message to preconfigured contact numbers via the GSM SIM800L module. Additionally, it enables authorized individuals, such as friends and family, to access the victim's location through SMS using the GSM SIM module. This process ensures swift and efficient response in critical situations by promptly notifying concerned parties and providing them with necessary location information.

C. Cost Analysis

TABLE I. PROPOSED SYSTEM COMPONENTS COST

Components	Functions	Cost (INR)	Cost-Effectiveness
Arduino Nano	Acts as the central processing unit of the system, coordinating data flow between components.	₹375 - ₹750	High processing power and versatility at a low price.

Authorized licensed use limited to: ANNA UNIVERSITY. Downloaded on December 05,2024 at 05:22:20 UTC from IEEE Xplore. Restrictions apply.

Neo6M GPS Module	Captures and transmits the victim's current location coordinates.	₹750 - ₹1,125	Reliable and accurate location tracking at a reasonable cost.
GSM SIM800L Module	Sends an SMS with the location details to pre-programmed emergency contact numbers.	₹375 - ₹750	Cost-effective communication capabilities, ensuring prompt delivery of messages.
SOS Push Button	Activates the system during emergencies, triggering the transmission of location data.	₹75 - ₹150	Inexpensive and essential for user interaction.
Battery	Powers the entire system, ensuring portability and reliability.	₹375 - ₹1,125	Necessary for mobility, with affordable options available.

Based on the table I, the total cost range for the system, ₹1,950 to ₹3,900, highlights its affordability, especially given the advanced functionalities it offers. By integrating essential safety features like real-time GPS tracking and instant communication via GSM, the system leverages cost-effective components while maintaining high performance and reliability. This combination ensures that the system provides robust and efficient safety measures without imposing significant financial burdens.

IV. Results and Discussion

A. Experimental Setup

Figure 3 illustrates the developed Women Safety System, which includes an Arduino Nano connected to a Neo 6M GPS tracking antenna, GSM SIM800L module, LM2596 voltage regulator, battery, and a push button. As mentioned earlier, whenever the user activates the push button, GPS antenna tracks the location and sends it to pre-programmed contact numbers through the GSM module. This enables the authorities to view the location through SMS.

When the victim presses the SOS push button, Figure 4 displays the immediate system response on the Ethernet Console interface. The developed device utilizes advanced GPS technology to accurately determine the location which includes both latitude and longitude coordinates. This vital information is then effectively sent to preprogramed contact numbers through the integrated GSM module.

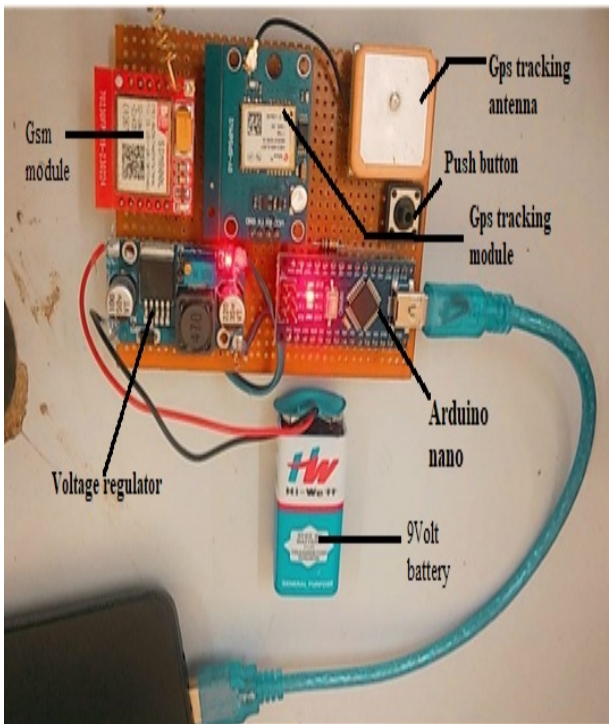

Fig. 3 Developed Women Safety System

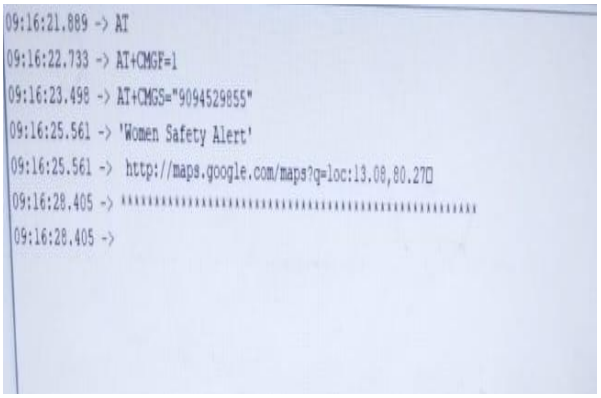

Fig. 4 System Output when SOS button is pressed

The inclusion of a GPS tracking along with an IoT enabled SoS button in this system acts as a forward-thinking and proactive solution to boost women's safety, enabling prompt and precise communication in emergency situations. This user-friendly and purpose-built device provides women with a powerful tool for sharing real-time locations and seeking immediate assistance, thereby contributing to overall safety and security [15].

Figures 5a and 5b vividly present the distinct location outputs produced by the GPS tracking IoT button[16] specifically designed to enhance women's safety. These figures demonstrate the practical application and effectiveness of the device in emergency situations.

Figure 5a displays the initial output when the SOS button on the device is pressed. Upon activation, the device immediately captures the user's precise location coordinates using GPS technology. This data is then processed and converted into a Google Maps link. The figure highlights the critical step of location data collection[17] and its conversion into a format that can be easily communicated to others.

Authorized licensed use limited to: ANNA UNIVERSITY. Downloaded on December 05,2024 at 05:22:20 UTC from IEEE Xplore. Restrictions apply.

Fig. 5a Location Output

Fig. 5b Location Output

Figure 5b shows the subsequent stage where the location information is received by a designated contact or emergency service. The figure illustrates how the Google Maps link, sent via a text message or an alert, can be accessed on a smartphone or any internet-enabled device[18]. When the link is clicked, it opens Google Maps, pinpointing the exact location of the person who triggered the SOS alert. This visual representation emphasizes the device's ability to provide real-time, accurate location data, which is crucial for prompt assistance.

Together, Figures 5a and 5b effectively illustrate the entire process from the activation of the SOS button to the reception of the location data by responders. These figures demonstrate the GPS tracking IoT button's role in enhancing women's safety by ensuring that their location can be quickly and accurately relayed in emergencies, facilitating swift response and intervention.

The Table II presents a comparative analysis of traditional safety alarms, safety gloves and wristbands, smartphone safety apps, and a developed women's safety system. Traditional alarms are moderately priced but lack real-time tracking and communication features. Safety gloves and wristbands offer real-time tracking and communication but may suffer from durability issues. Smartphone apps, with subscription fees, provide comprehensive safety features including real-time tracking and communication, high user comfort, and compatibility with existing systems. However, the developed women's safety system stands out with its durability, user comfort, environmental resilience, compatibility, and standardization, offering a holistic solution to women's safety concerns.

TABLE. II. COMPARISON OF EXISTING SYSTEM WITH DEVELOPED WOMEN SAFETY SYSTEM

Aspects	**Traditional Safety Alarms**	**Safety Gloves and Wristbands**	**Smartphone Safety Apps**	**Developed Women Safety System**
Cost (INR)	₹2,000 - ₹5,000	₹1,500 - ₹4,000	₹0 - ₹1,500 (subscription fees)	₹1,950 - ₹3,900
Real-time GPS Tracking	No	Yes	Yes	Yes
Instant Communication	Limited (sound alarms only)	Yes (via paired smartphone)	Yes (via app)	Yes (via GSM module)
Durability	High	Medium (wear and tear issues)	Varies (depends on phone case)	High (advanced materials used)
User Comfort	N/A (stationary devices)	Medium (can be bulky)	High (phone-based)	High (ergonomic design)
Environmental Resilience	High	Medium	Varies (depends on phone case)	High (designed for resilience)
Compatibility with Existing Systems	Low	Medium	High (depends on app integration)	High (standardized protocols)
Standardization	Low	Medium	High (app-dependent)	High (advocates for standardization)
Ease of Use	Medium	Medium	High	High
Portability	Low (bulky)	High	High	High

Authorized licensed use limited to: ANNA UNIVERSITY. Downloaded on December 05,2024 at 05:22:20 UTC from IEEE Xplore. Restrictions apply.

V. CONCLUSION AND FUTURE WORK

In this research, a cost effective IoT enabled women safety is developed with tracking ability. The developed system uses GPS and GSM along with IoT technology. For safety measures, it uses an SOS push button. The design circuitry adopted in the developed system addresses various challenges prevailing in the existing system. The main strength of this device is its ability to enhance safety for women, potentially reducing crimes against women and children in society. Further research could focus on optimizing the system's design for scalability and mass production, as well as exploring the integration of advanced AI algorithms for intelligent threat detection and response.

REFERENCES

[1] R. Brinda, M. Bhavani, S. Ramalingam, "IoT Smart Tracking Device for Missing Person Finder (Women/Child) using ESP32 AI camera and GPS", International Conference on Augmented Intelligence and Sustainable Systems (ICAISS), Nov 2022.

[2] M. S. Farooq, A. Masooma, U. Omer, R. Tehseen, S. A. M. Gilani and Z. Atal, "The Role of IoT in Woman's Safety: A Systematic Literature Review," in IEEE Access, vol. 11, pp. 69807-69825, 2023.

[3] M Tanseer Ali, Nuzhat Shakira Islam, Md Wahiduzzaman Rakib, Rafid Al Ahmed, Mohammad Hamdan Kaicher, "Designing of A Handbag for Women Safety", 2nd International Conference on Robotics, Electrical and Signal Processing Techniques (ICREST), Feb 2021.

[4] M. Rahnema, "Overview of the GSM system and protocol architecture," in IEEE Communications Magazine, vol. 31, no. 4, pp. 92-100, April 1993, doi: 10.1109/35.210402.

[5] P. R and B. P. T. V, "Performance Analysis of NOMA under Power Control Mechanism," 2021 Innovations in Power and Advanced Computing Technologies (i-PACT), Kuala Lumpur, Malaysia, 2021, pp. 1-5, doi: 10.1109/i-PACT52855.2021.9696636.

[6] Monisha, D. G., Monisha, M., Pavithra, G., & Subhashini, R. (March 2016). Women safety device and application-FEMME. Indian Journal of Science and Technology. Using GSM Module, GPS, Hidden Camera Detector.

[7] Priyanka, M. Nandini, S. Murugan, K. N. H. Srinivas, T. D. S. Sarveswararao, and E. Kusuma Kumari. "Smart IOT device for child safety and tracking." International Journal of Innovative Technology and Exploring Engineering (IJITEE) 8, no. 8 (2019): 1791-1795.

[8] B.Vijaylashmi, Renuka, Pooja Chennur, Sharangowda.Patil," Self Defense System for Women Safety with Location Tracking and SMS alerting through GSM Network", International Journal of Research in Engineering and Technology, Volume: 04 ,eISSN: 2319-1163 | pISSN: 2321-7308.

[9] Telagam, N., Kandasamy, N., & U, S. (2023). Smart Device for Women's Safety Designed Using IoT and Virtual Instrumentation Browser. International Journal of Interactive Mobile Technologies (iJIM), 17(02), pp. 166–177. https://doi.org/10.3991/ijim.v17i02.35227

[10] Shubham Gupta, Saxena, Sharad, Shailendra Mishra, Mohammed Baljon, Shamiksha Mishra, Sunil Kumar Sharma, Prakhar Goel and Vinay Kishore. "IoT-Based Women Safety Gadgets (WSG): Vision, Architecture, and Design Trends." *Computers, Materials & Continua* 76, no. 1 (2023). https://doi.org/10.32604/cmc.2023.039677

[11] Ebenezer, V., Uvaana Falicica, Rithika Baskaran, Agatha Celesty, and Sejal R. Eden. "IOT Based Wrist Band for Women Safety." (2023).

[12] Bala, B. Sindhu, M. Swetha, M. Tamilarasi, and D. Vinodha. "Survey On Women Safety Using IoT." International Journal of Computer Engineering in Research Trends 5, no. 2 (2018): 16-24.

[13] V. Hyndavi, N. S. Nikhita and S. Rakesh, "Smart Wearable Device for Women Safety Using IoT," 2020 5th International Conference on Communication and Electronics Systems (ICCES), Coimbatore, India, 2020.

[14] P. Ramesh and P. T. V. Bhuvaneswari, "RFID Aided Intelligent Shopping Trolley with Child Care Unit," 2021 IEEE International Conference on RFID Technology and Applications (RFID-TA), Delhi, India, 2021.

[15] Ramesh P, Vidhya N, Bhuvaneswari PTV, Parveen S. (2023) I-SOEWM: IoT Based Solar Energized Weather Monitoring System. Indian Journal of Science and Technology. 16(20): 1505-1515.

[16] J Sunil Kumar, D Sreelakshmi, G Sindhura Bhargavi, "WOMEN SAFETY SYSTEM USING GSM & GPS TRACKING", International Journal of Emerging Technologies and Innovative Research, Vol.5, Issue 7, page no.1157-1160, July-2018.

[17] Vidhya, N., and P. T. V. Bhuavneswari. "ADBIS: Anomaly Detection to Bolster IoT Security Using Machine Learning." In 2023 IEEE 3rd International Conference on Applied Electromagnetics, Signal Processing, & Communication (AESPC), pp. 1-6. IEEE, 2023.

[18] Sivapriya, C., and Dr S. Preetha. "Women Safety in Digital India–a Prime Agenda for the Society." International Journal of Engineering & Technology 7, no. 2.33 (2018): 1091-1096

Authorized licensed use limited to: ANNA UNIVERSITY. Downloaded on December 05,2024 at 05:22:20 UTC from IEEE Xplore. Restrictions apply.