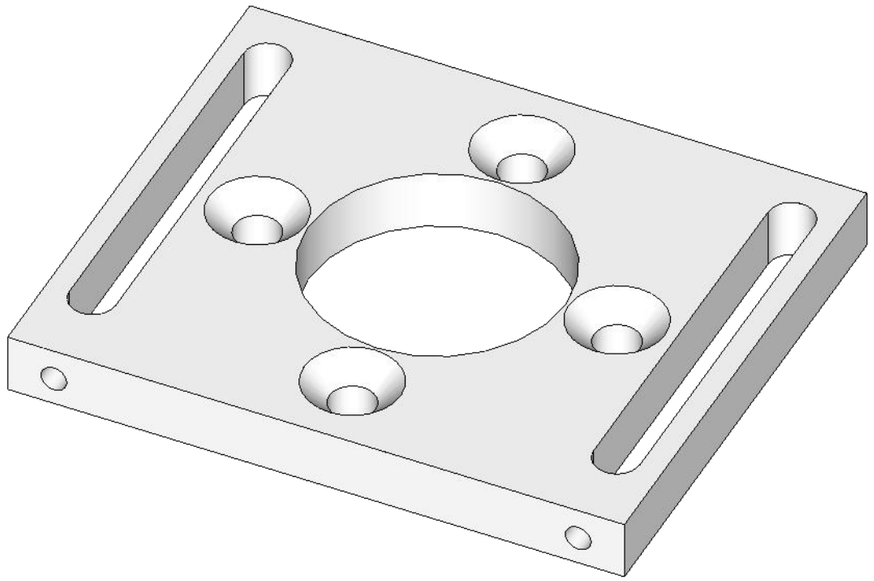

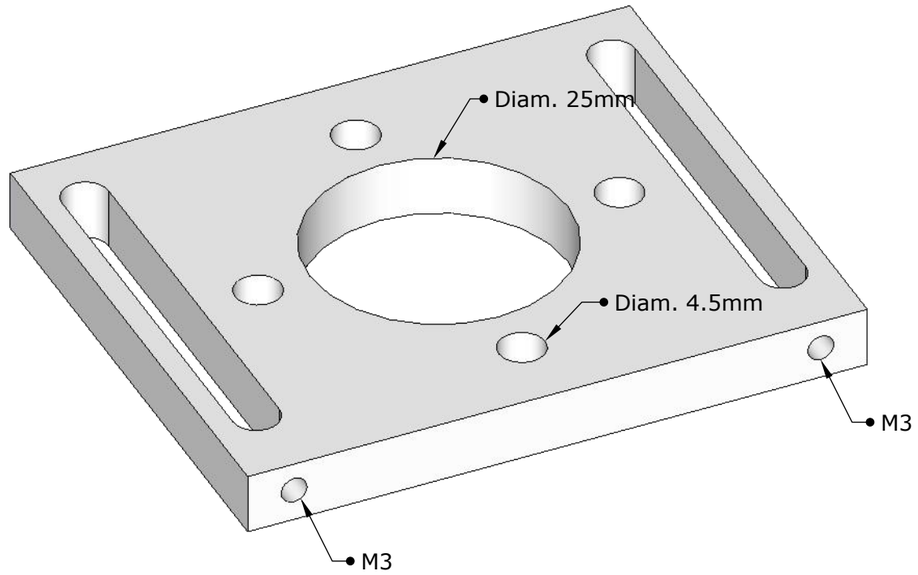
Diam. 25mm
Diam. 4.5mm
M3
M3

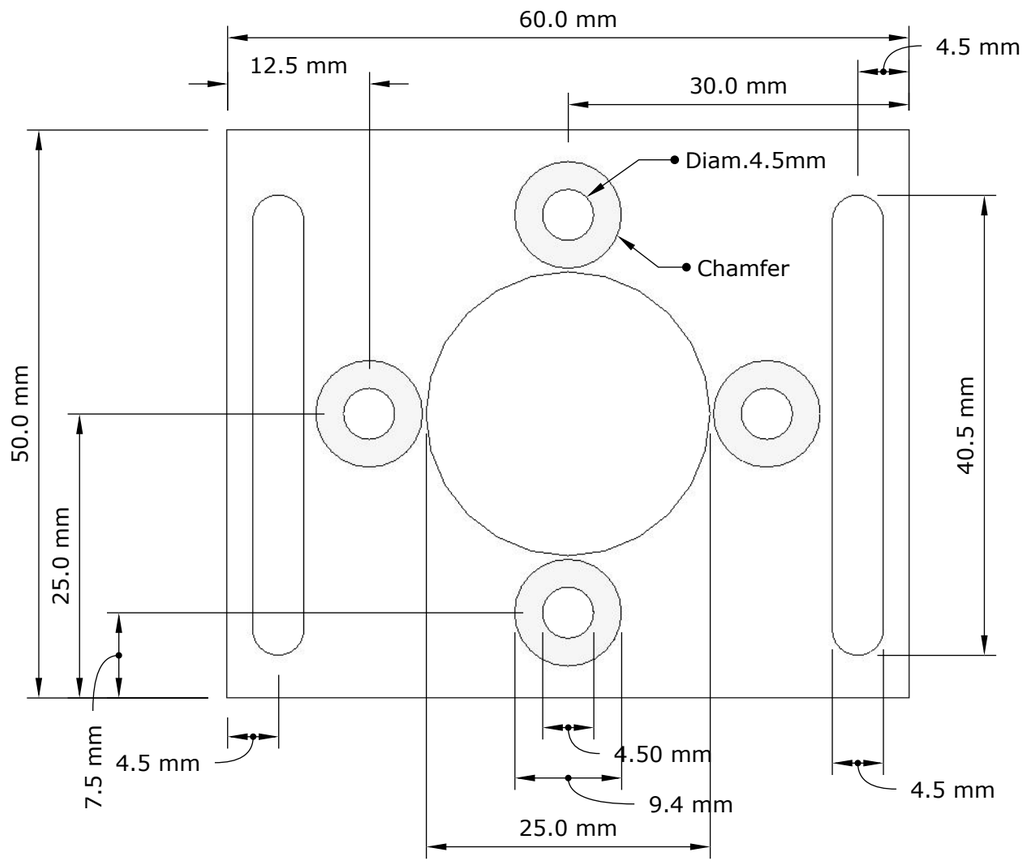
60.0 mm
12.5 mm
30.0 mm
4.5 mm
Diam.4.5mm
Chamfer
50.0 mm
25.0 mm
40.5 mm
7.5 mm
4.5 mm
4.50 mm
9.4 mm
25.0 mm
4.5 mm

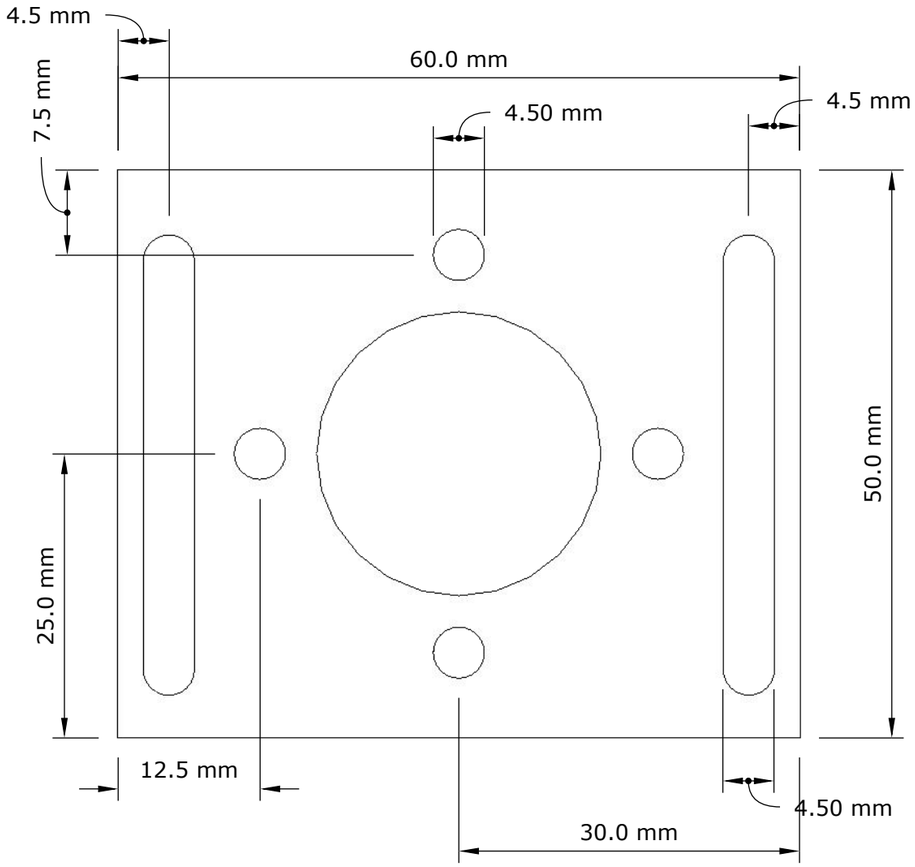
4.5 mm
60.0 mm
4.50 mm
4.5 mm
7.5 mm
50.0 mm
25.0 mm
12.5 mm
30.0 mm
4.50 mm

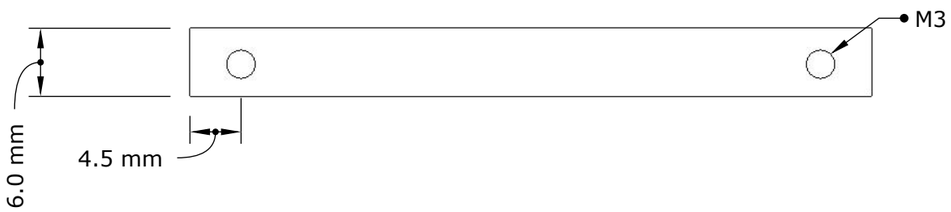
M3
6.0 mm
4.5 mm