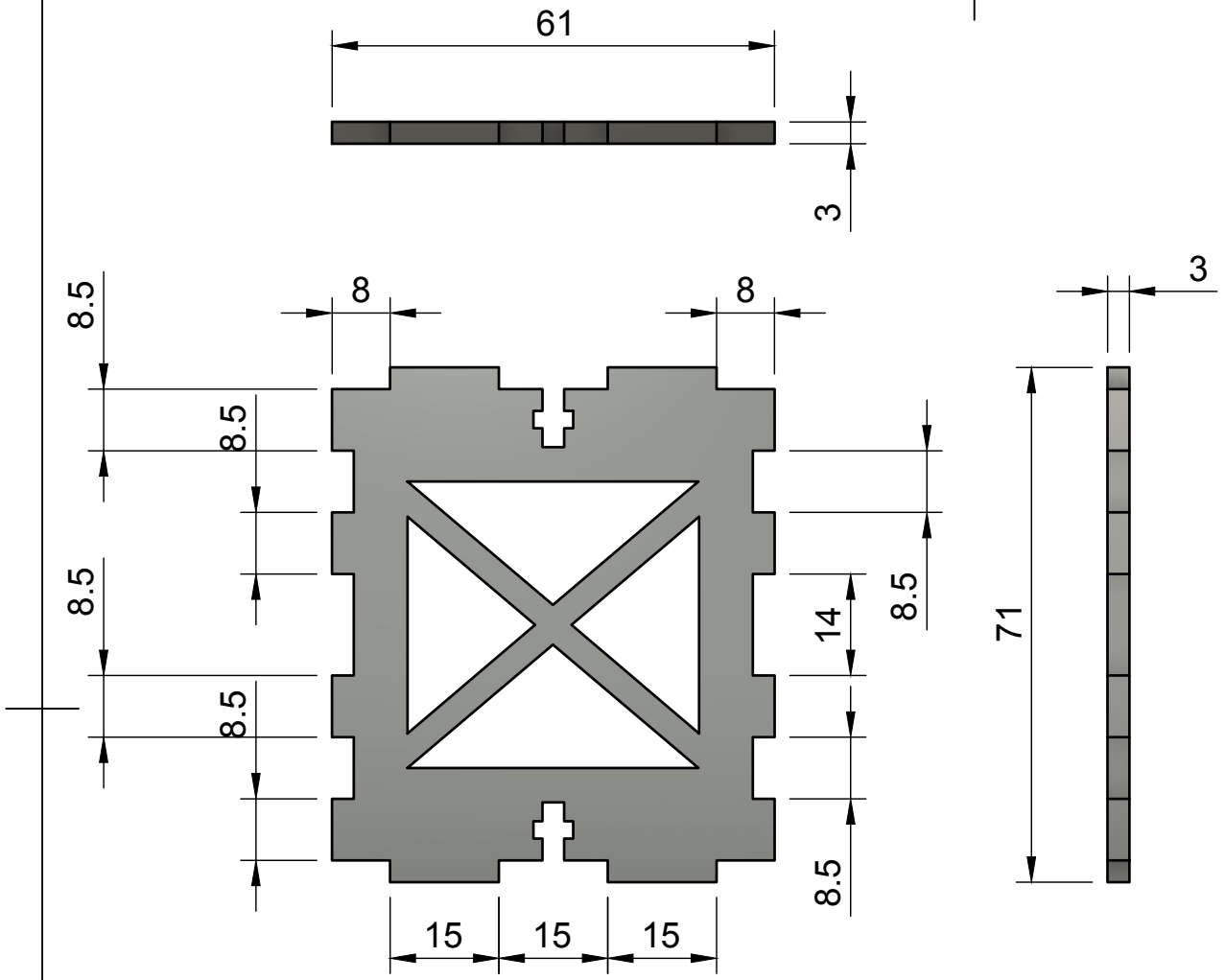

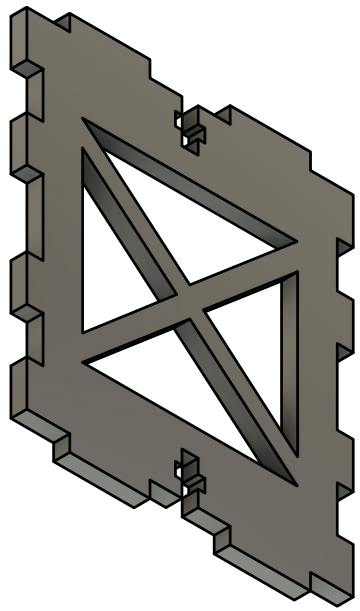

Dept.	Technical reference	Created by Yash Chaudhary	Approved by
		Document type Drawing	Document status
		Title Motor Back Plate	DWG No.
			Rev. / Date of issue / Sheet 1/1