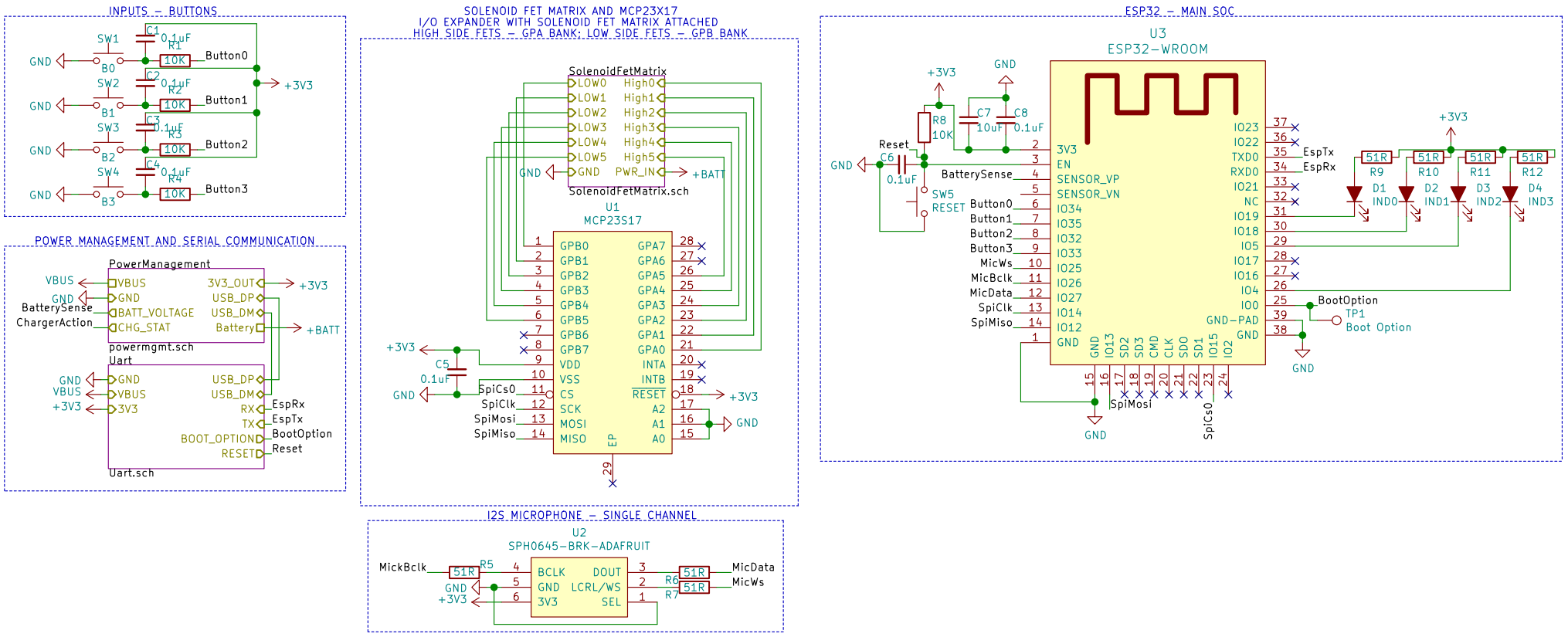

Devyash Lodha

Sheet: /

File: BrailleBoy.sch

Title: BrailleBoy – Main Control Systems

Size: A4	Date: 2018-08-07	**Rev: 1.0.0**
KiCad E.D.A. kicad (5.0.0)		Id: 1/5

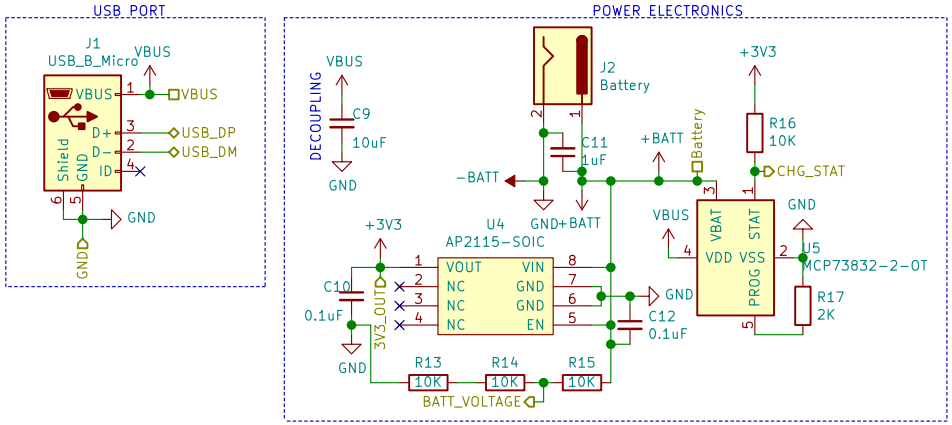

Battery connector, voltage regulator, LiPo charger, Battery level indicator

Devyash Lodha

Sheet: /PowerManagement/
File: powermgmt.sch

Title: Power management system

Size: A4	Date: 2018-08-07	**Rev: 1.0.0**
KiCad E.D.A. kicad (5.0.0)		Id: 2/5

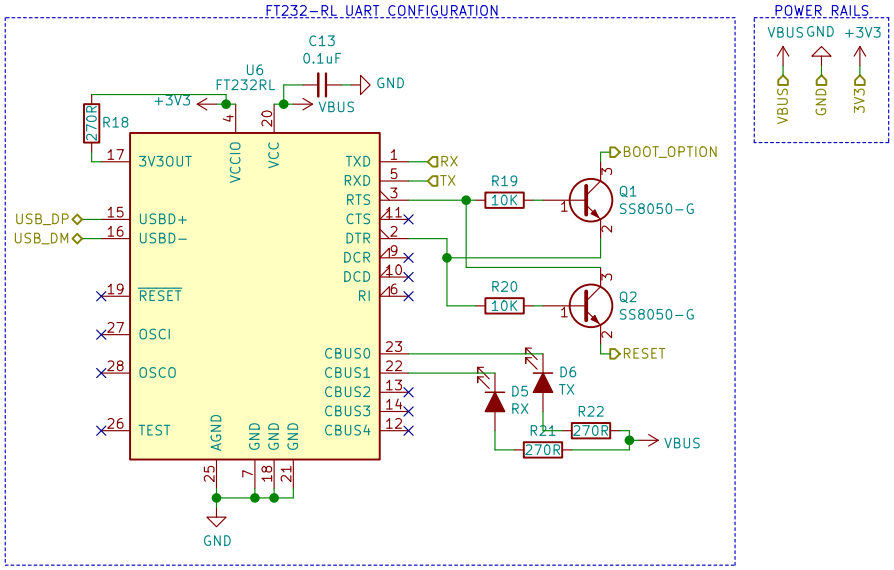

Devyash Lodha

Sheet: /Uart/

File: Uart.sch

Title: FT232(RL)-based UART programming/communications interface

Size: A4	Date: 2018-08-07	Rev: 1.0.0
KiCad E.D.A. kicad (5.0.0)		Id: 3/5

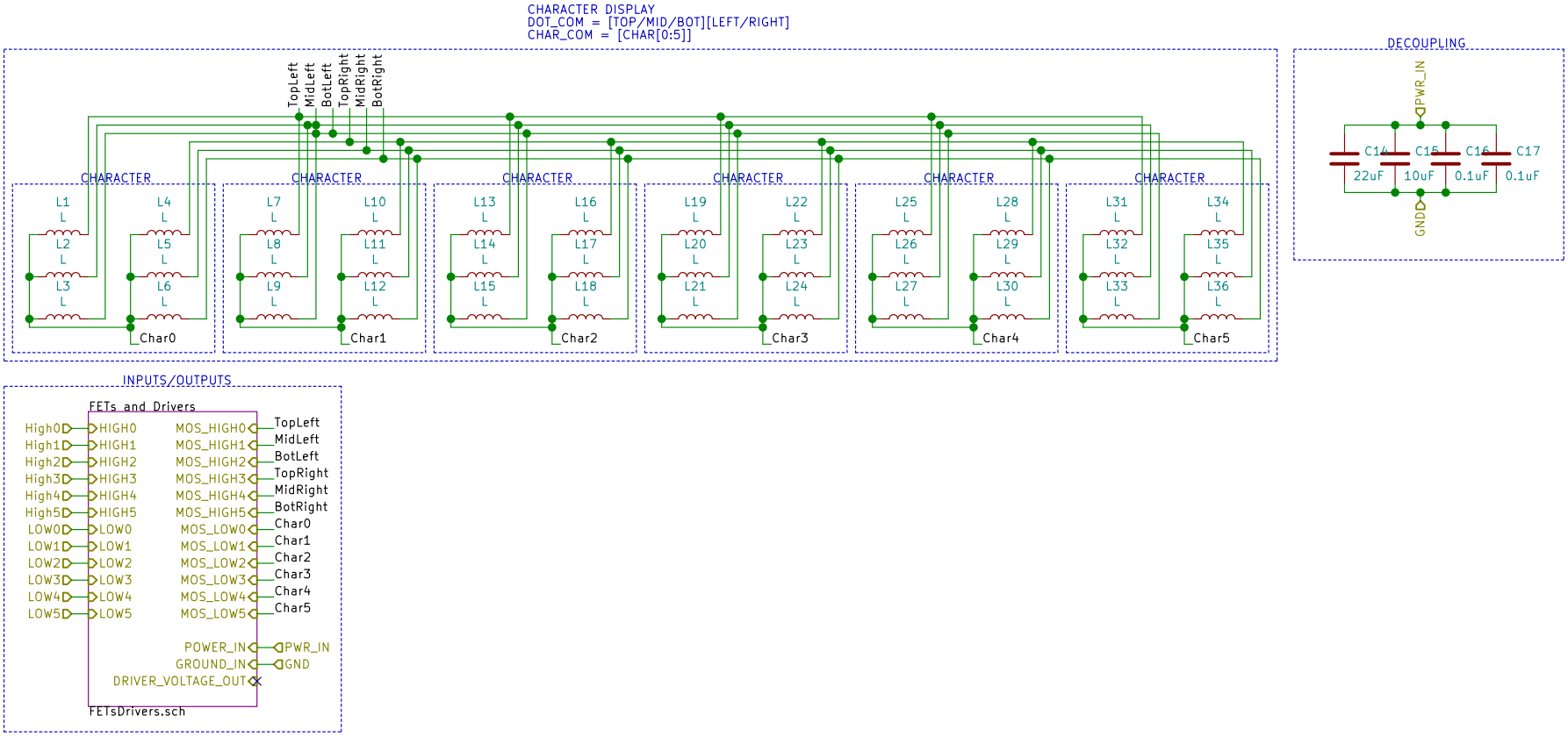

Devyash Lodha

Sheet: /SolenoidFetMatrix/
File: SolenoidFetMatrix.sch

Title: Solenoid Matrix and Power Electronics

Size: A4	Date: 2018-08-07	**Rev: 1.0.0**
KiCad E.D.A. kicad (5.0.0)		Id: 4/5

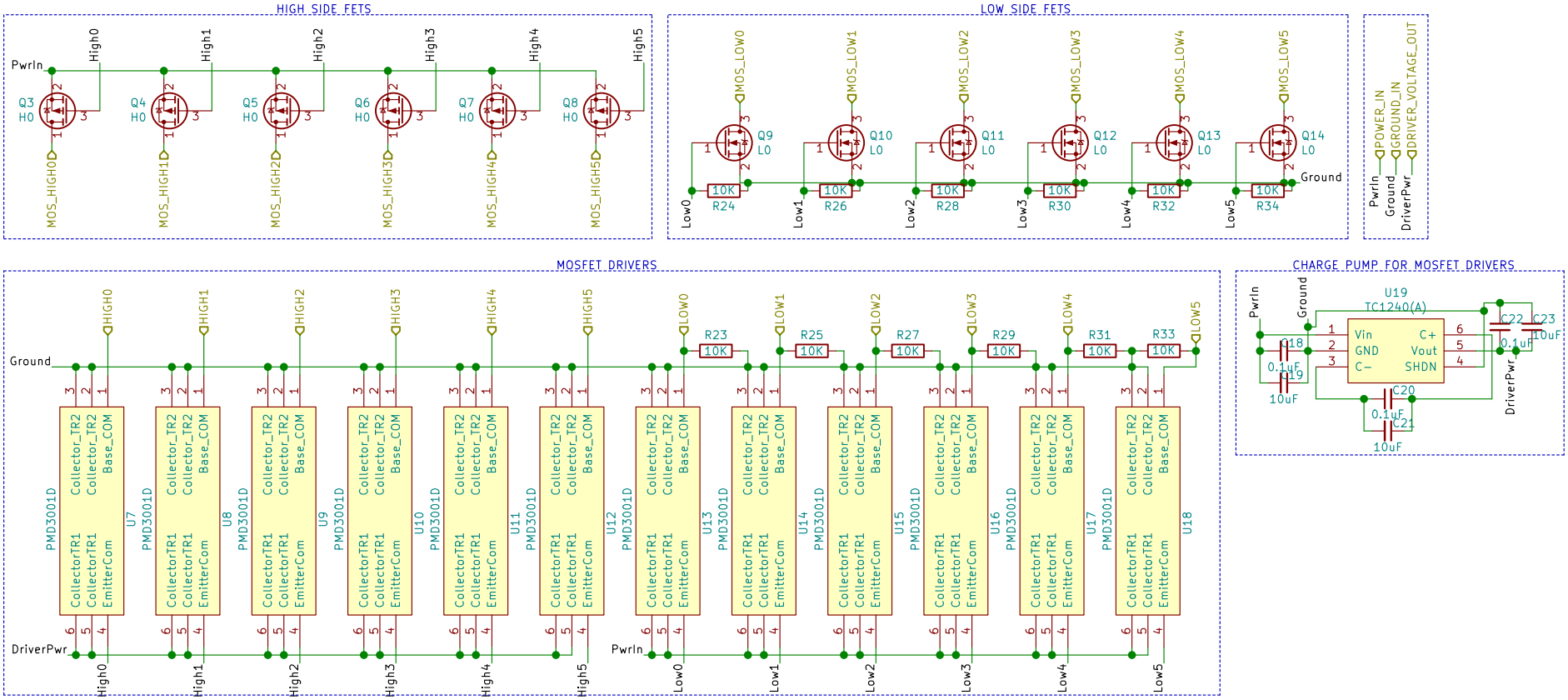

LOW SIDE FETS HAVE A VGS MAX OF 5V, SO THE CHARGE PUMP IS ONLY USED FOR THE HIGH SIDE FETS.
THE LOW SIDE FETS ARE ALSO LARGER, AS THEY NEED TO HANDLE 6X THE CURRENT OF THE HIGH SIDE FETS.

BrailleBoy
Devyash Lodha

Sheet: /SolenoidFetMatrix/FETs and Drivers/
File: FETsDrivers.sch

Title: BrailleBoy – MOSFET and MOSFET driver implementation

Size: A4	Date: 2018-08-07	**Rev: 1.0.0**
KiCad E.D.A. kicad (5.0.0)		Id: 5/5