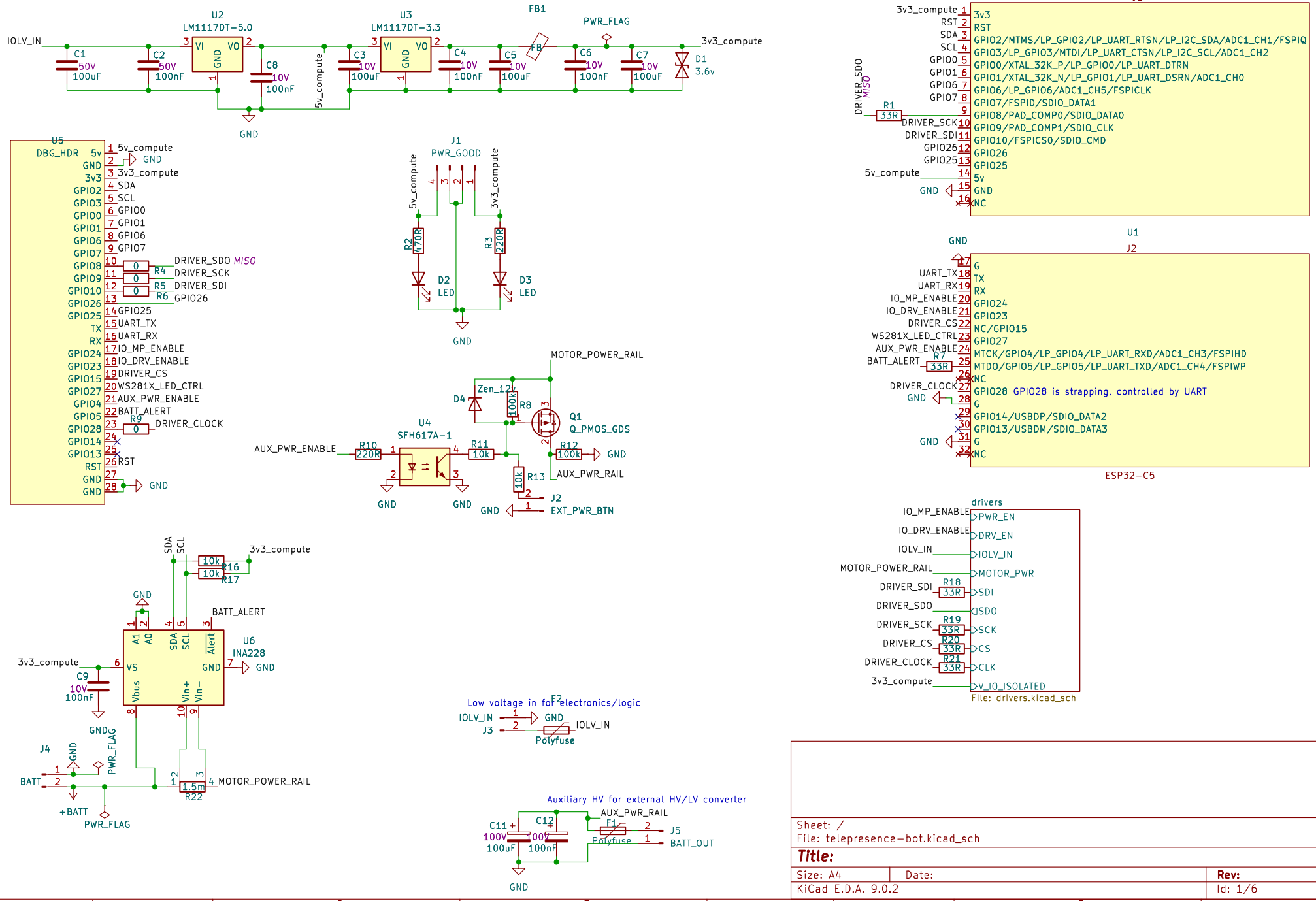

Sheet: /
File: telepresence-bot.kicad_sch

Title:

Size: A4	Date:	Rev:
KiCad E.D.A. 9.0.2		Id: 1/6

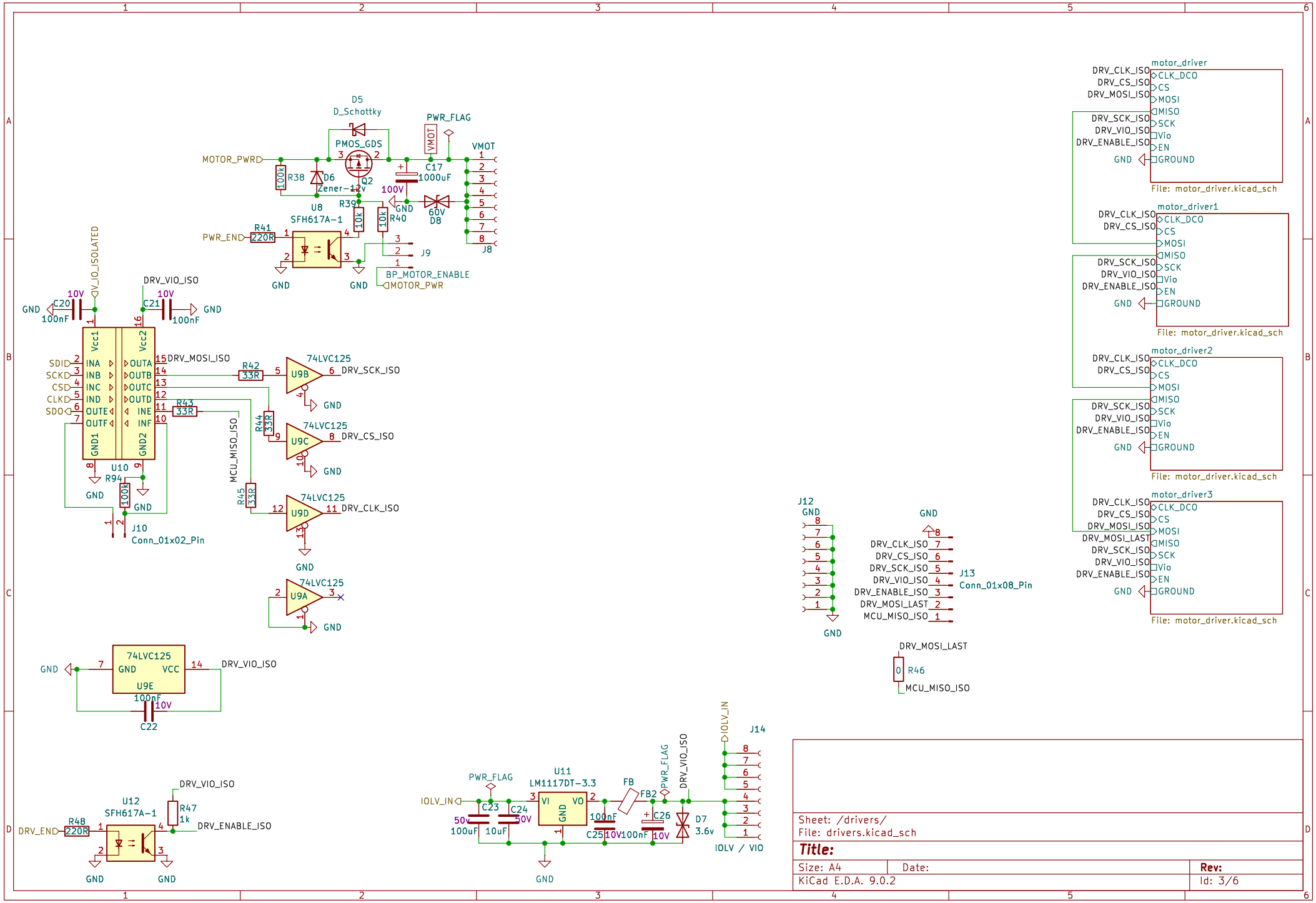
D5
D_Schottky
PWR_FLAG
PMOS_GDS
MOTOR_PWR
R38
100k
D6
Zener-12v
Q2
U8
C17
1000uF
VMOT
100V
GND
R39
10k
R40
10k
60V
D8
J8
PWR_END
R41
220R
SFH617A-1
J9
BP_MOTOR_ENABLE
MOTOR_PWR
GND
IV_IO_ISOLATED
DRV_VIO_ISOLATED
C20
10V
100nF
C21
10V
100nF
Vcc1
Vcc2
SDI
SCK
CS
CLK
SDO
INA
INB
INC
IND
OUTE
OUTF
OUTA
OUTB
OUTC
OUTD
INE
INF
GND1
GND2
U10
DRV_MOSI_ISO
R42
33R
R43
33R
R44
33R
R45
33R
MCU_MISO_ISO
R94
100k
J10
Conn_01x02_Pin
74LVC125
U9B
DRV_SCK_ISO
U9C
DRV_CS_ISO
U9D
DRV_CLK_ISO
U9A
U9E
VCC
DRV_VIO_ISO
C22
100nF
10V
U12
SFH617A-1
R48
220R
DRV_END
R47
1k
DRV_ENABLE_ISO
U11
LM1117DT-3.3
VI
VO
IOLV_IN
C23
50V
100uF
C24
50V
10uF
FB
FB2
C25
100nF
10V
C26
100nF
10V
D7
3.6v
IOLV / VIO
J14
J12
J13
Conn_01x08_Pin
DRV_MOSI_LAST
R46
0
MCU_MISO_ISO
motor_driver
CLK_DCO
CS
MOSI
MISO
SCK
Vio
EN
GROUND
DRV_CLK_ISO
DRV_CS_ISO
DRV_MOSI_ISO
DRV_SCK_ISO
DRV_VIO_ISO
DRV_ENABLE_ISO
File: motor_driver.kicad_sch
motor_driver1
motor_driver2
motor_driver3
DRV_MOSI_LAST
Sheet: /drivers/
File: drivers.kicad_sch
Title:
Size: A4
Date:
Rev:
KiCad E.D.A. 9.0.2
Id: 3/6

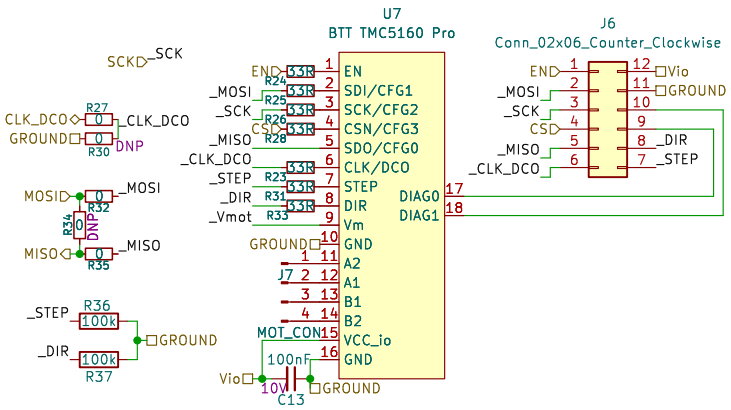

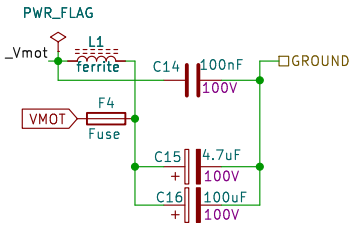

Sheet: /drivers/motor_driver1/
File: motor_driver.kicad_sch

Title:

Size: A4	Date:	**Rev:**
KiCad E.D.A. 9.0.2		Id: 2/6

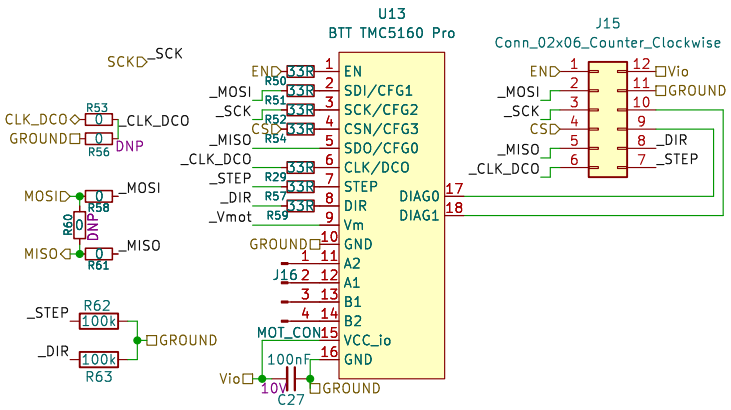

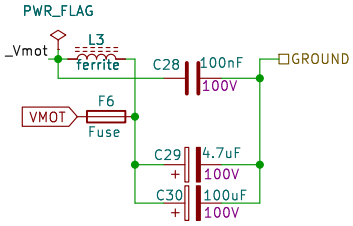

Sheet: /drivers/motor_driver/
File: motor_driver.kicad_sch

Title:

Size: A4	Date:	**Rev:**
KiCad E.D.A. 9.0.2		Id: 3/6

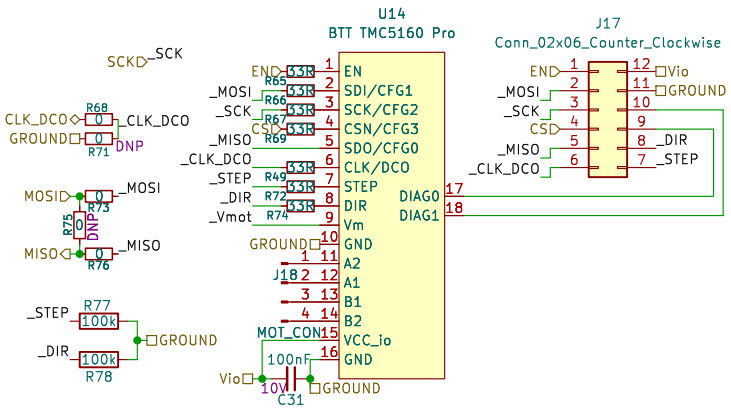

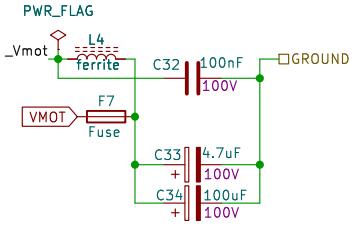

Sheet: /drivers/motor_driver2/
File: motor_driver.kicad_sch

Title:

Size: A4	Date:	Rev:
KiCad E.D.A. 9.0.2		Id: 4/6

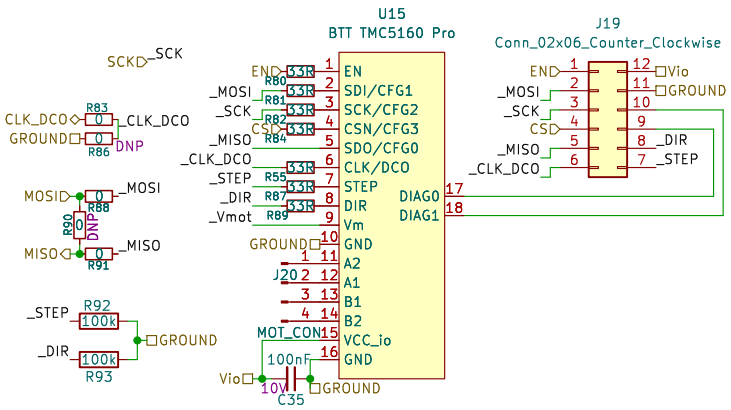

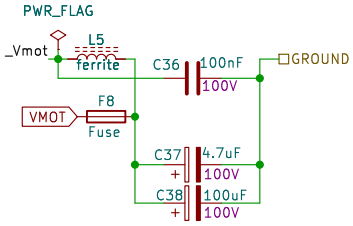

Sheet: /drivers/motor_driver3/
File: motor_driver.kicad_sch

Title:

Size: A4	Date:	Rev:
KiCad E.D.A. 9.0.2		Id: 5/6