بنام خدا

طراحی سیستم های دیجیتال

نیم سال دوم ۱۴۰۵-۱۴۰۴

تمرین اول

موعد تحویل ۱۱ اردیبهشت ۱۴۰۵

- جواب سوالات را در قالب فایل PDF، به آدرس "khu.dsd98@gmail.com" با عنوان "A_U_1: stdName 1, stdName 2"ارسال کنید.
- تمرین ها را می توانید در گروه های دو نفره ارسال کنید که stdName 1 , stdName 2 نام اعضای گروه است.
- فایل PDF باید شامل کدهای VHDL قابل سنتز و اسکرین شات‌های RTL، post-mapping و compilation report باشد.
- هر روز تاخیر در ارسال تکلیف شامل ۲۰ درصد جریمه خواهد شد. تاخیر بیش از ۱ هفته مورد قبول نمی باشد.

- **IMPORTANT Note:** Synthesis your designs in Quartus Software as described in the tutorial video and extract the RTL form of your design. Take a screen shot of the RTLs. You can use the following link to get the tutorial video:
  https://drive.google.com/file/d/1J41ptyTsOxudNs4T1qDWQywa3E2Z7yIH/view?usp=sharing

1. Explain the basic blocks and interconnections of FPGA, CPLD, and PAL. Then, compare these chips in terms of area, performance, power, applications, and security.

2. The purpose of the decoder and encoder circuits is to convert from one type of input encoding to a different output encoding. There are many possible types of code converters. One common example is a BCD-to-7-segment decoder, which converts one binary-coded decimal (BCD) digit into information suitable for driving a digit oriented display. As illustrated in Figure 2, the circuit converts the BCD digit into seven signals that are used to drive the segments in the display. Each segment is a small light-emitting diode (LED), which glows when driven by an electrical signal. The segments are labeled from a tog in Figure 2. Write a VHDL code that implements this code converter using <u>case statement</u>.

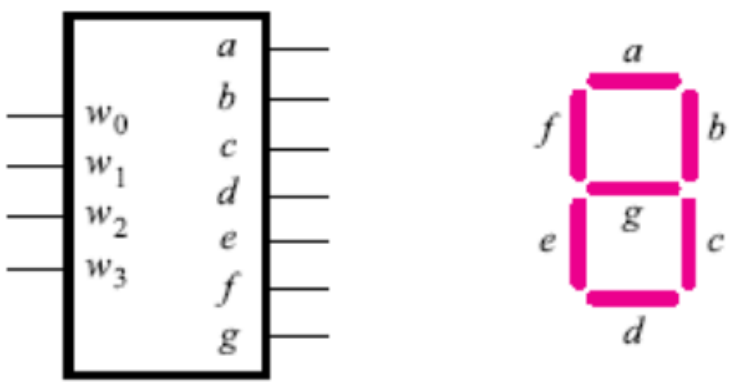

Figure 2 BCD to 7 segment

3. In this question, we are going to learn about the implementation of a full adder, using a 3:8 decoder and OR gates. *X*, *Y*, and *C-in* are the input of the full adder. *Sum* and *C-out* outputs of a full adder have the following truth tables:

X	***Y***	***C-in***	***Sum***	***C-out***
0	0	0	0	0
0	0	1	1	0
0	1	0	1	0
0	1	1	0	1
1	0	0	1	0
1	0	1	0	1
1	1	0	0	1
1	1	1	1	1

Therefore, we have,

Sum = ∑(1, 2, 4, 7)
C-out = ∑(3, 5, 6, 7)

a) Draw architecture (model) of the full adder using <u>a 3:8 decoder and OR gates</u>

b) Write a VHDL code to implement the full adder.
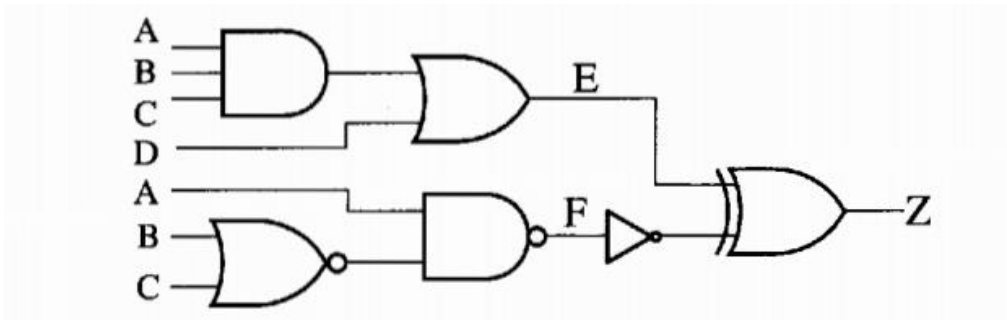
4. Write a synthesizable VHDL description of the following combinational circuit using concurrent statements.