Specification:

- Precision current source
- Ranges: 500uA, 1mA & 1.5mA
- Max. load
  - Input voltage 27.7V
  - Dropout voltage 1.5V & 0.2V Voltage drop at Iset Resistor
  - 27.7V – 1.5V – 0.2 = 26V max. voltage at output
  - 26V / 1.5mA = 17KΩ @ 1.5mA
  - 52KΩ @ 0.5mA

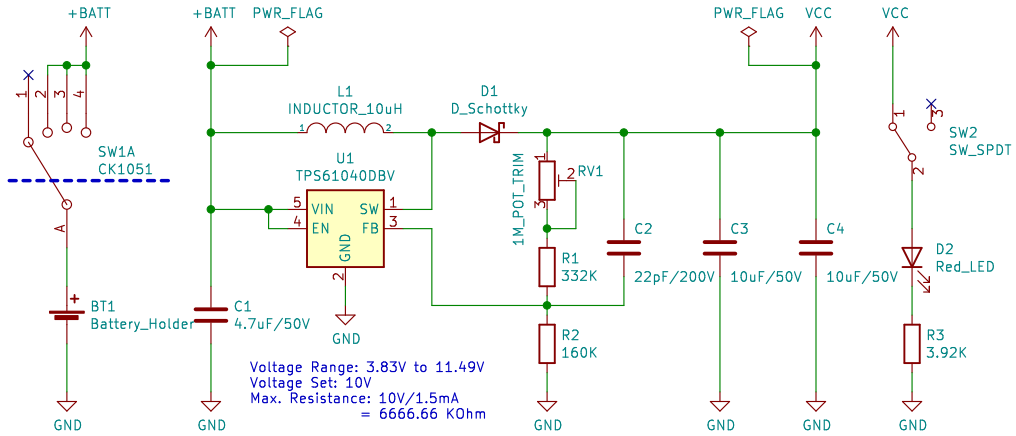

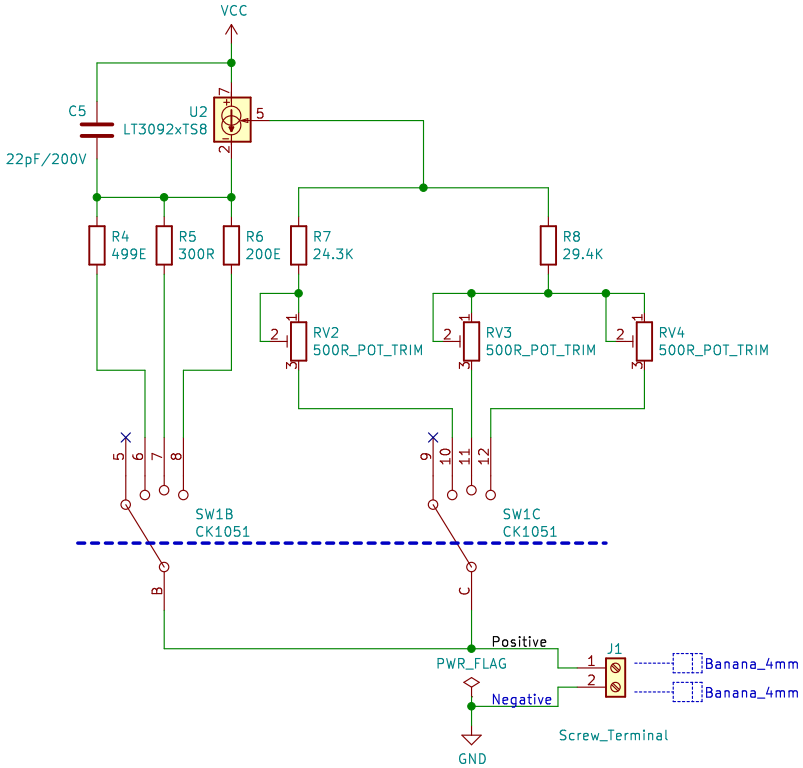

Yash Kudale's Blog
https://www.yashkudale.com/

Sheet: /
File: current_source.sch

Title: Precision Current Source

Size: A4	Date: 2021-02-18	**Rev: A**
KiCad E.D.A. kicad (5.1.9)-1		Id: 1/1