Institute of Computer Technology
B. Tech Computer Science and Engineering
Subject: Computer Organization (2CSE205)

PRACTICAL-EXAM

AIM: - To study and design Combinational Multiplier.

Objective: - (i) Multiplication of two 4-bit numbers
(ii) Analyse Truth Table

Expected Input: Multiplier number
Expected Output: As order given of two 4-bit Number
Write one mathematical example also.

CIRCUIT DIAGRAM:

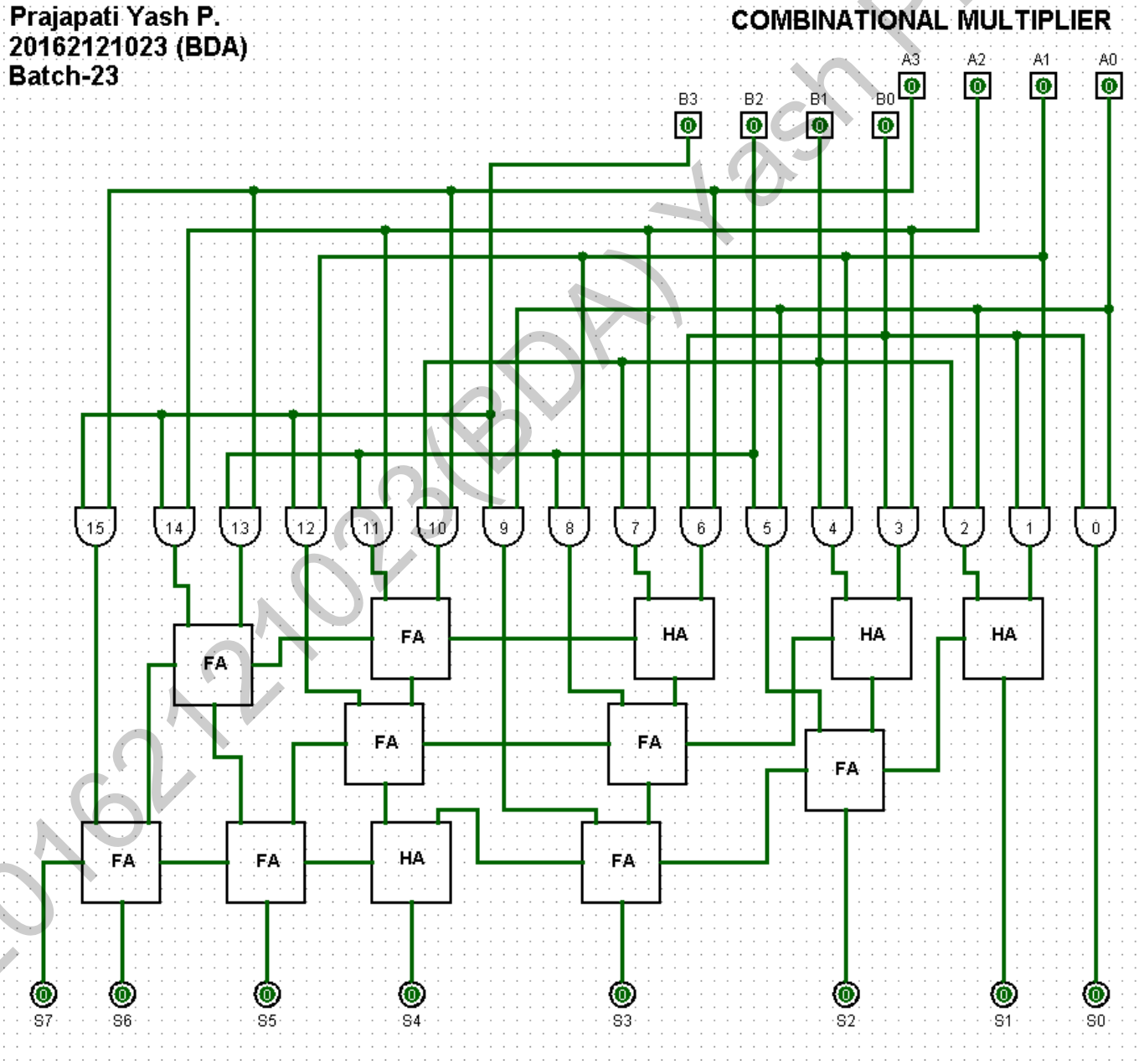

20162121023(BDA) Yash Prajapati

TRUTH TABLE:

Combinational Analysis

File Edit Project Simulate Window Help

Inputs Outputs Table Expression Minimized

A3	A2	A1	A0	B3	B2	B1	B0	S7	S6	S5	S4	S3	S2	S1	S0
0	0	0	0	0	0	0	0	0	0	0	0	0	0	0	0
0	0	0	0	0	0	0	1	0	0	0	0	0	0	0	0
0	0	0	0	0	0	1	0	0	0	0	0	0	0	0	0
0	0	0	0	0	0	1	1	0	0	0	0	0	0	0	0
0	0	0	0	0	1	0	0	0	0	0	0	0	0	0	0
0	0	0	0	0	1	0	1	0	0	0	0	0	0	0	0
0	0	0	0	0	1	1	0	0	0	0	0	0	0	0	0
0	0	0	0	0	1	1	1	0	0	0	0	0	0	0	0
0	0	0	0	1	0	0	0	0	0	0	0	0	0	0	0
0	0	0	0	1	0	0	1	0	0	0	0	0	0	0	0
0	0	0	0	1	0	1	0	0	0	0	0	0	0	0	0
0	0	0	0	1	0	1	1	0	0	0	0	0	0	0	0
0	0	0	0	1	1	0	0	0	0	0	0	0	0	0	0
0	0	0	0	1	1	0	1	0	0	0	0	0	0	0	0
0	0	0	0	1	1	1	0	0	0	0	0	0	0	0	0
0	0	0	0	1	1	1	1	0	0	0	0	0	0	0	0
0	0	0	1	0	0	0	0	0	0	0	0	0	0	0	0
0	0	0	1	0	0	0	1	0	0	0	0	0	0	0	1
0	0	0	1	0	0	1	0	0	0	0	0	0	0	1	0
0	0	0	1	0	0	1	1	0	0	0	0	0	0	1	1
0	0	0	1	0	1	0	0	0	0	0	0	0	1	0	0
0	0	0	1	0	1	0	1	0	0	0	0	0	1	0	1
0	0	0	1	0	1	1	0	0	0	0	0	0	1	1	0
0	0	0	1	0	1	1	1	0	0	0	0	0	1	1	1
0	0	0	1	1	0	0	0	0	0	0	0	1	0	0	0
0	0	0	1	1	0	0	1	0	0	0	0	1	0	0	1
0	0	0	1	1	0	1	0	0	0	0	0	1	0	1	0
0	0	0	1	1	0	1	1	0	0	0	0	1	0	1	1
0	0	0	1	1	1	0	0	0	0	0	0	1	1	0	0
0	0	0	1	1	1	0	1	0	0	0	0	1	1	0	1
0	0	0	1	1	1	1	0	0	0	0	0	1	1	1	0
0	0	0	1	1	1	1	1	0	0	0	0	1	1	1	1

Build Circuit

MATHEMATICAL EXAMPLE:

For example 1, Take multiplication of two numbers.

number 1 = 5 (0101)

number 2 = 2 (0010)

5*2=10

0101 * 0010 = 1010

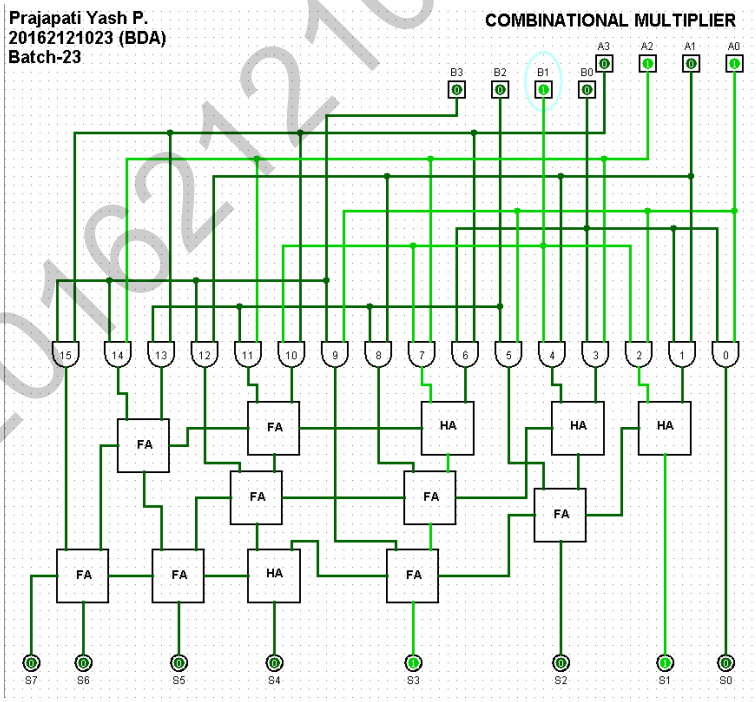

20162121023(BDA) Yash Prajapati

<u>For example 2</u>, Take multiplication of two numbers.
number 1 = 5 (0101)
number 2 = 11 (1011)
5*11=55
0101 * 1011 = 00110111

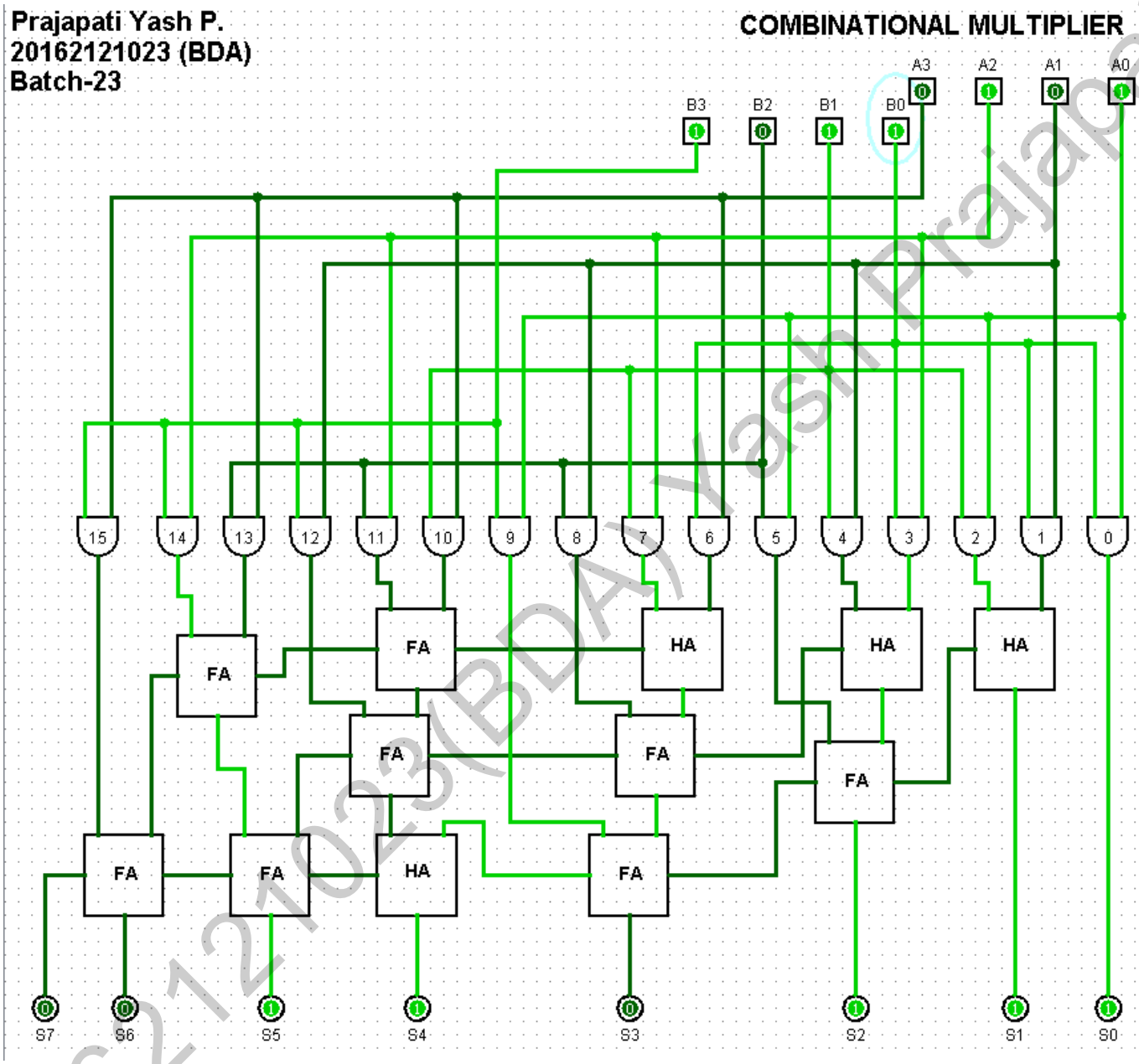

CONCLUSION:
Hence, by studying truth table and circuit diagram and analysing the example we conclude the study and design of Combinational Multiplier.

20162121023(BDA) Yash Prajapati