THE NATIONAL INSTITUTE OF ENGINEERING

Visveswaraya Technological University

Mysuru – 570 008

Virtual Lab Report

Course : Linear Integrated Circuits

Semester: IV

Submitted By :

YASHAWANTH D S - 4NI25EC426

Section : C

Submitted To :

Dr. Remya.Jayachandran

Assistant Professor
ECE Department

Department of Electronics and Communication Engineering

The National Institute of Engineering

(Autonomous Institute under VTU, Belagavi) Mysuru – 570 008

2025-26

Characteristics and parameters of Op-Amp

To study and measure the characteristics and parameters of an Op-amp (IC-741):

(a) Input bias current at inverting terminal
(b) Input bias current at non-inverting terminal
(c) Input offset current
(d) Input offset voltage
(e) Slew rate

Introduction

An operational amplifier is a direct coupled high gain amplifier usually consisting of one or more differential amplifiers and followed by a level translator and an output stage. The output stage is generally a push-pull or push-pull complementary-symmetry pair. An operational amplifier is available as a single integrated circuit package.

The operational amplifier is a versatile device that can be used to amplify dc as well as ac input signals and was originally designed for performing mathematical operations such as addition, subtraction, multiplication and integration. Thus, the word operational amplifier stems for its original use for these mathematical operations and is abbreviated to op-amp. With the addition of suitable external feedback components, the modern day op-amp can be used for a variety of applications, such as ac and dc signal amplification, active filters, oscillators, comparators, regulators and others.

Since an op-amp is a multistage amplifier, it can be represented by a block diagram as shown in Fig. 1.

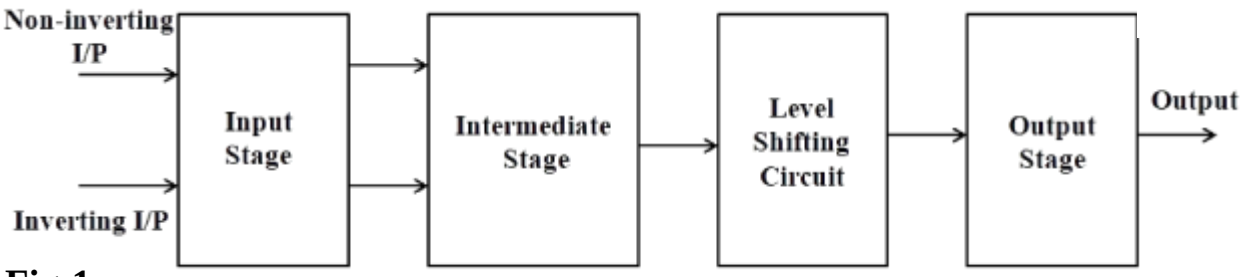

Fig-1:
Block diagram of op-amp

- The input stage is the dual input, balanced-output differential amplifier. This stage generally provides most of the voltage gain of an amplifier

and also establishes the input resistance of the op-amp. The intermediate stage is usually another differential amplifier, which is driven by the output of the first stage. In most amplifiers the intermediate stage is the dual input, unbalanced (single-ended) output. Because direct coupling is used, the dc voltage at the output of the intermediate stage is well above ground potential. Therefore, generally, the level translator (shifting) circuit is used after the intermediate stage to shift the dc level at the output of the intermediate stage downward to zero volts with respect to ground. The final stage is usually a push-pull complementary amplifier output stage. The output stage increases the output voltage swing and raises the current supplying capability of the op-amp. A well-designed output stage also provides low output resistance.

❖ Schematic symbol

Fig. 2 shows the schematic symbol of an op-amp

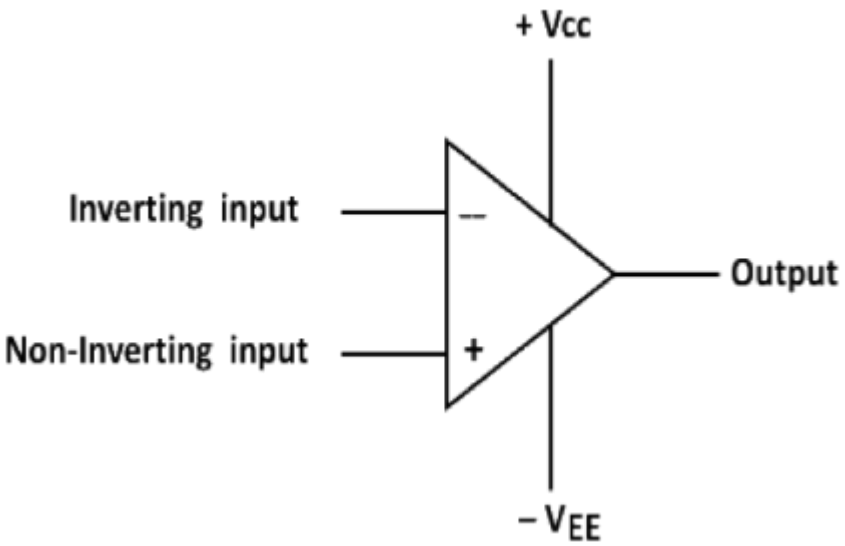

Fig-2: Schematic symbol of op-amp

The input differential amplifier stage of the op-amp is designed to be operated in the differential mode, the differential inputs are designated by the (+) and (-) notations. The (+) input is the non-inverting input. An ac signal (or dc voltage) applied to this input produces an in-phase (or same polarity) signal at the output. On the other hand, the (-) input is the inverting input because an ac signal (or dc voltage) applied to this input produces a 180° out of phase (or opposite polarity) signal at the output.

❖ Op-amp IC-741 pin configuration

The pin configuration of IC-741 general purpose operational amplifier is shown in Fig. 6. The reference point of the chip is the notch at the top. The pins are numbered in a counter clockwise direction, starting at the notch.

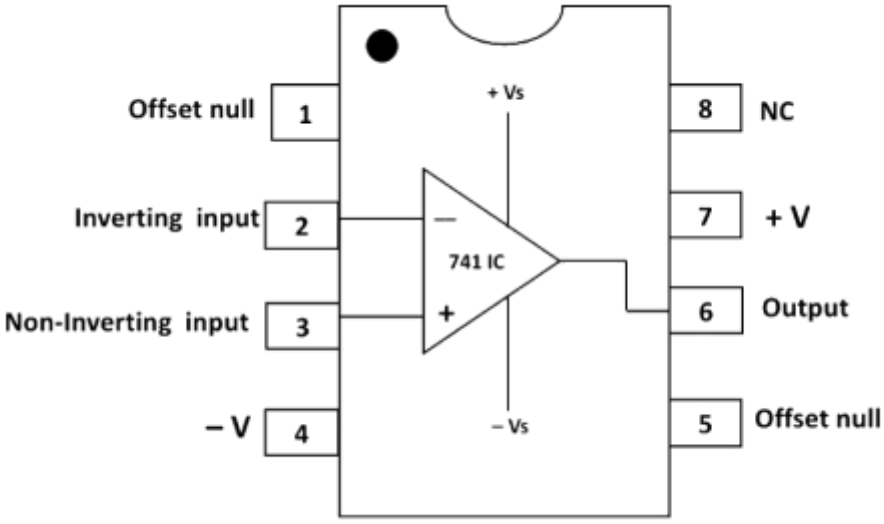

Fig-6: Pin diagram of op-amp IC-741

➢ **Pin 1** and **Pin 5** are offset null pins. Offset null is a calibration feature of the op-amp. The op-amp is so sensitive to the input voltage that at times, the output will generate a signal even when there is no intentional input. To avoid this condition for certain applications, offset null pins are provided. They are usually connected to a variable resistance such as a potentiometer. The potentiometer can be adjusted to produce a zero-output voltage from Pin 6.

➢ **Pin 2** and **Pin 3** are two input pins. Both inputs, pin 2 and pin 3, generate an output at Pin 6, but they generate opposite polarities. Pin 2 is the inverting input. Any signal applied to Pin 2 generates a signal of opposite polarity at the output. The non-inverting input, Pin 3, generates an output of the same polarity at Pin 6.

➢ Power to the op-amp is provided through **Pin 4** and **Pin 7**. Pin 4 is either connected to ground or a negative voltage value from 3 to 18 volts. Pin 7 is connected to the positive voltage of the power supply.

➢ The output of the amplifier is at **Pin 6**.

➢ **Pin 8** is not used. 'NC' stands for no connection.

❖ Characteristics of an ideal op-amp:

An ideal op-amp would exhibit the following electrical characteristics:

• Infinite voltage gain A.

• Infinite input resistance Ri, so that almost any signal source can drive it and there is no loading of the preceding stage.

• Zero output resistance Ro, so that the output can drive an infinite number of other devices.

• Zero output voltage when input voltage is zero.

• Infinite bandwidth, so that any frequency signal from 0 to ∞ Hz can be amplified without attenuation.

• Infinite common-mode rejection ratio (CMRR), so that the output common mode noise voltage is zero.

• Infinite slew rate, so that output voltage changes occur simultaneously with input voltage changes.

❖ Parameters of an op-amp

Measurement of Input Offset Voltage of 741 Op-Amp

- An ideal operational amplifier gives zero output when both input terminals are at the same voltage. However, in a practical op-amp like the 741, a small differential voltage is required between the inputs to make the output zero. This small voltage is called **input offset voltage (Vio)**.
- In this experiment, the 741 op-amp is connected in a high-gain closed-loop configuration. Both input terminals are grounded through resistors. Ideally, the output should be zero. But due to internal transistor mismatch and bias currents, a small DC output voltage appears.
- The output voltage is related to the input offset voltage by the gain of the circuit:
- Vout=(1+RfR1)×VioV_{out} = (1 + \frac{R_f}{R_1}) \times V_{io}Vout=(1+R1Rf)×Vio
- Therefore, the input offset voltage is calculated as:
- Vio=Vout1+RfR1V_{io} = \frac{V_{out}}{1 + \frac{R_f}{R_1}}Vio =1+R1RfVout
- Thus, by measuring the output voltage and knowing the closed-loop gain, the input offset voltage of the 741 op-amp can be determined.

Fig-3: Input offset voltage V_{io}

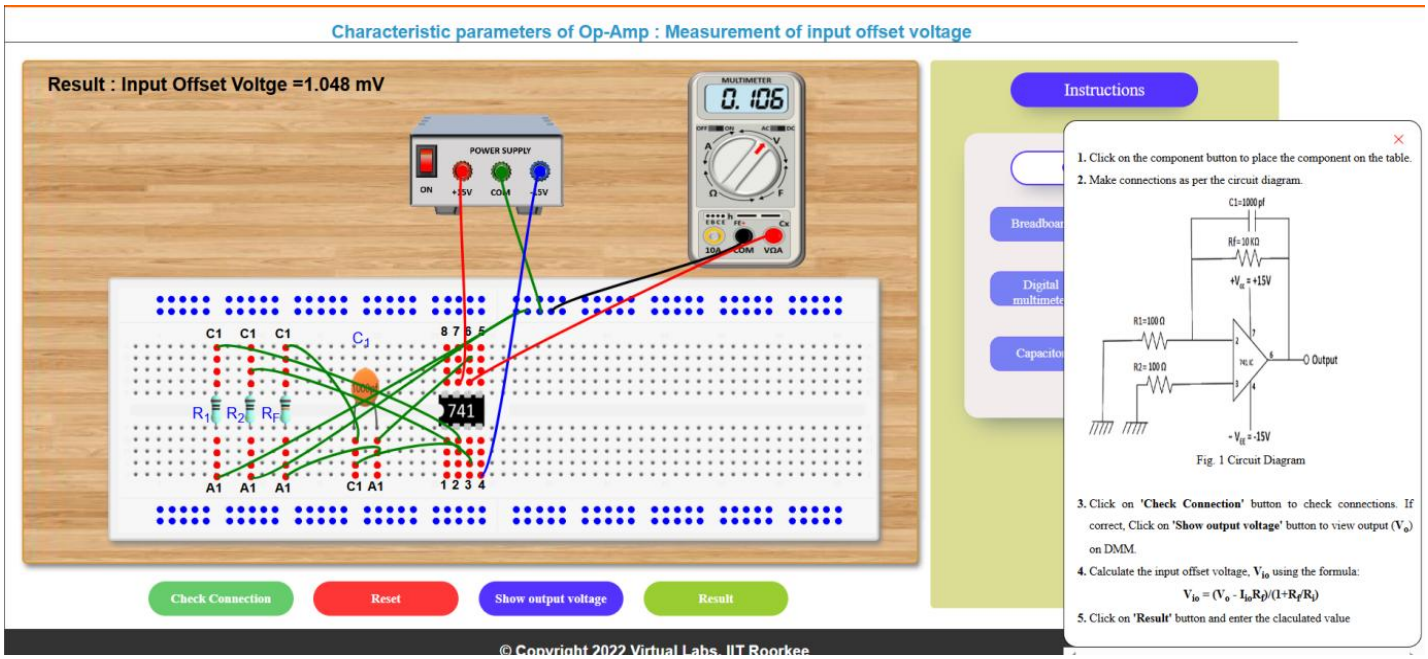

Measurement of Input Offset Current of 741 Op-Amp

To measure the input offset current (Iio) **of a 741 operational amplifier**

Measurement of Input Offset Current of 741 Op-Amp

- An ideal operational amplifier draws zero current at its input terminals. However, in a practical op-amp like the 741, small currents called **input bias currents** flow into the inverting and non-inverting terminals. Due to internal transistor mismatch, these two currents are not exactly equal. The difference between them is called the **input offset current (Iio)**.
- In this experiment, the 741 is connected in a high-resistance feedback configuration. Because the feedback resistor value is large, even a very small offset current produces a measurable output voltage.
- The output voltage is related to the input offset current by:
- Vo=Iio×RfV_o = I_{io} \times R_fVo=Iio×Rf
- Hence, the input offset current is calculated as:
- Iio=VoRfI_{io} = \frac{V_o}{R_f}Iio=RfVo
- By measuring the output voltage and knowing the feedback resistance, the input offset current of the 741 op-amp can be determined.

Fig-4: Input offset current I_{io}

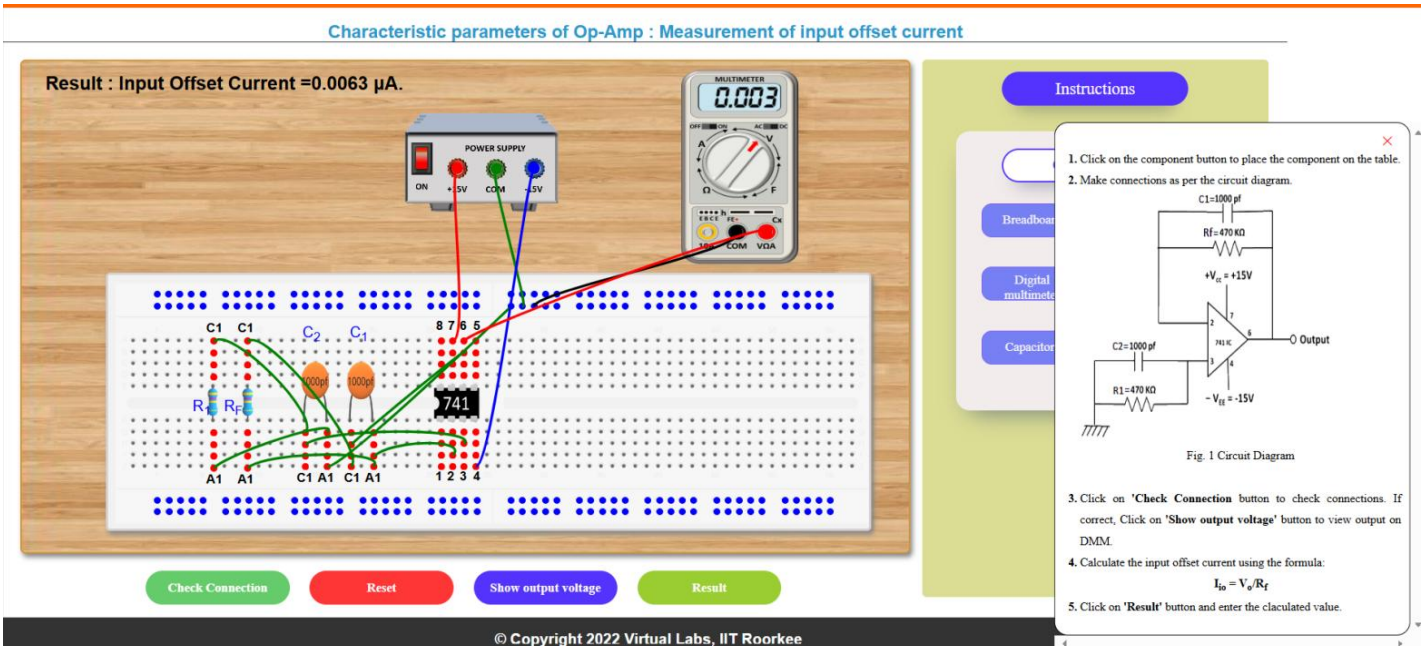

Measurement of Inverting Bias Current of 741 Op-Amp

- In an ideal op-amp, no current flows into the input terminals. But in a practical 741 op-amp, a small current called **input bias current** flows into both the inverting and non-inverting terminals due to internal transistor operation.
- In this experiment, the inverting bias current is measured by connecting a large feedback resistor (Rf) between the output and the inverting input, while the non-inverting input is grounded. Because Rf has a high value, even a very small bias current produces a measurable output voltage.
- The output voltage is related to the inverting bias current by:
- Vo=IB1×RfV_o = I_{B1} \times R_fVo=IB1×Rf

- Therefore, the inverting bias current is calculated as:
- IB1=VoRfI_{B1} = \frac{V_o}{R_f}IB1=RfVo

- By measuring the output voltage and knowing the feedback resistance, the inverting bias current of the 741 op-amp can be determined.

Fig-4: Input bias current at inverting terminal

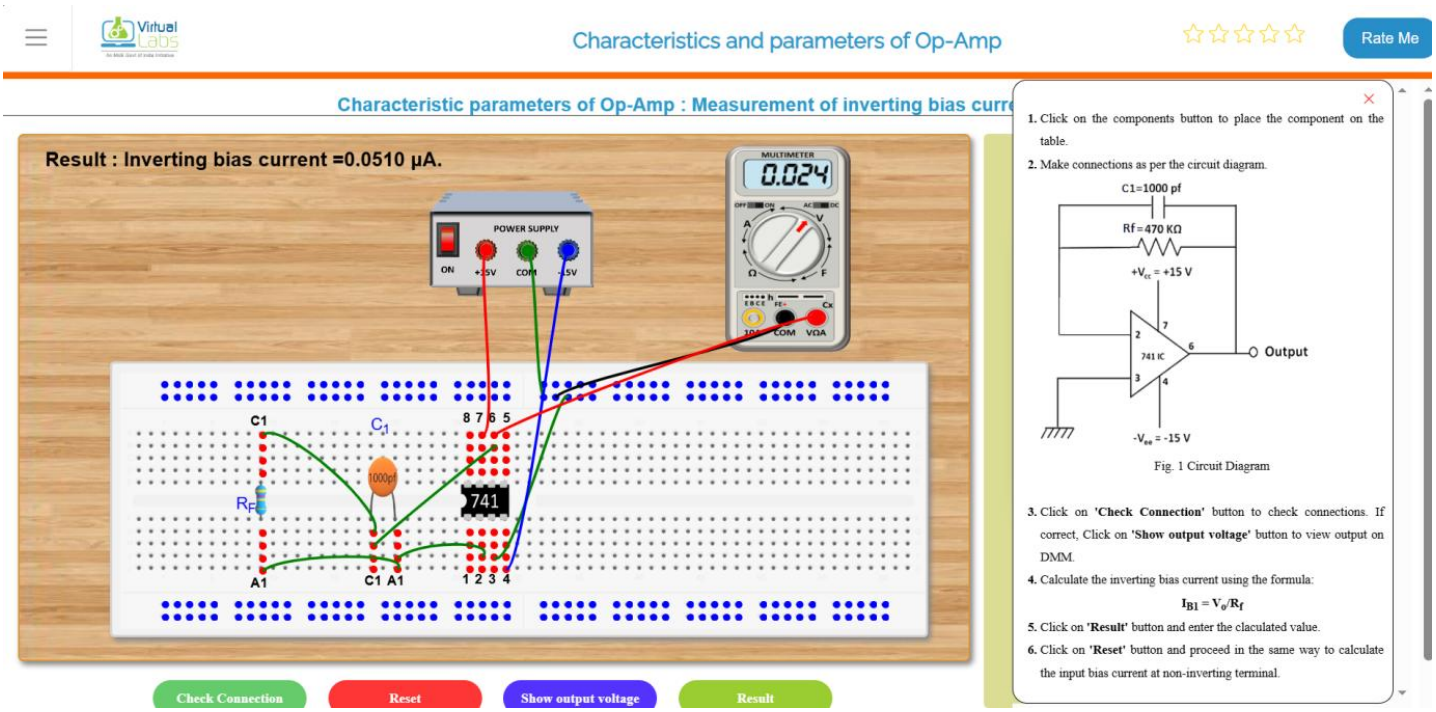

Measurement of Non-Inverting Bias Current of 741 Op-Amp

- In a practical 741 op-amp, a small current flows into both input terminals. This current is called **input bias current**. The current flowing into the non-inverting terminal is called the **non-inverting bias current (IB2)**.
- In this experiment, the inverting input is properly connected, and a resistor (R1) is connected at the non-inverting terminal. Due to the bias current flowing into the non-inverting input, a small voltage is developed across the resistor. This voltage appears at the output.
- Since the resistor value is known, the non-inverting bias current is calculated using:
- IB2=VoR1I_{B2} = \frac{V_o}{R_1}IB2=R1Vo

- Thus, by measuring the output voltage and knowing the resistance value, the non-inverting bias current of the 741 op-amp can be determined.

Fig-4: Input bias current at Non inverting terminal

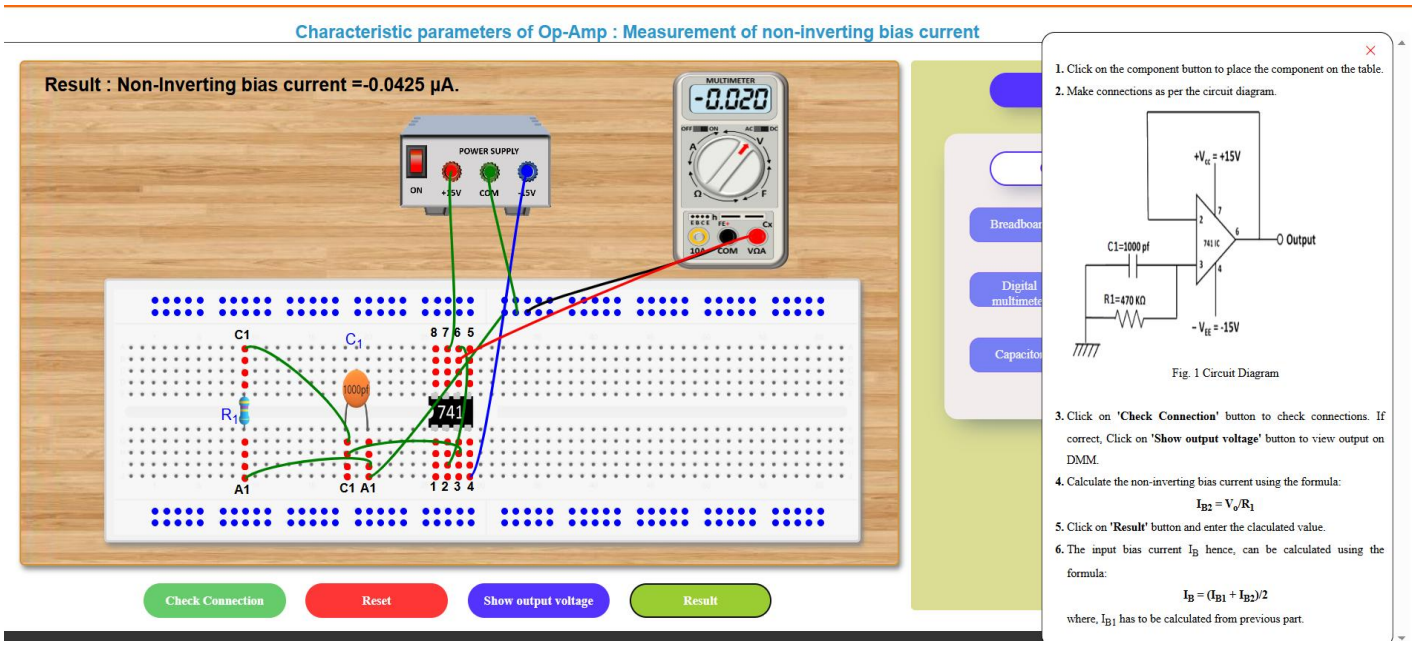

Short Theory – Measurement of Slew Rate of 741 Op-Amp

- Slew rate is defined as the maximum rate of change of output voltage with respect to time. It indicates how fast an op-amp can respond to rapid changes in the input signal. It is expressed in volts per microsecond (V/µs).
- In this experiment, a high-frequency sinusoidal signal is applied to the 741 op-amp. As the frequency increases, the output waveform starts to distort and becomes triangular. This happens because the op-amp cannot change its output voltage fast enough, and the maximum slope of the output waveform represents the slew rate.
- The slew rate is calculated using:
- [
  S.R. = 2\pi f_{max} V_m
  ]
- where
  (f_{max}) = frequency at which distortion begins,
  (V_m) = peak amplitude of output signal.
- By observing the waveform on the CRO and measuring the required values, the slew rate of the 741 op-amp can be determined.
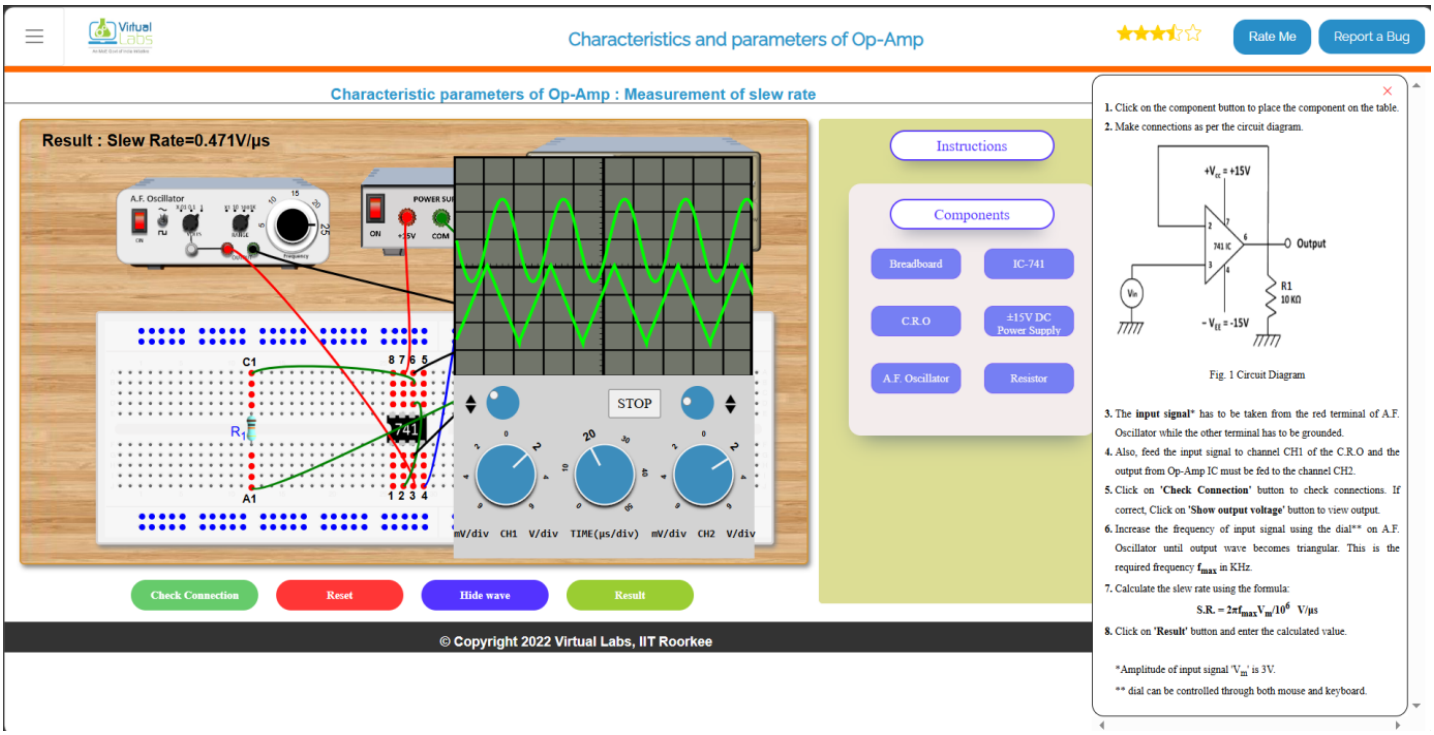
Fig-4: Slew Rate