Questionnaire

Question 1) Output-Input Chain (Pattern A0)

Category Exact Match

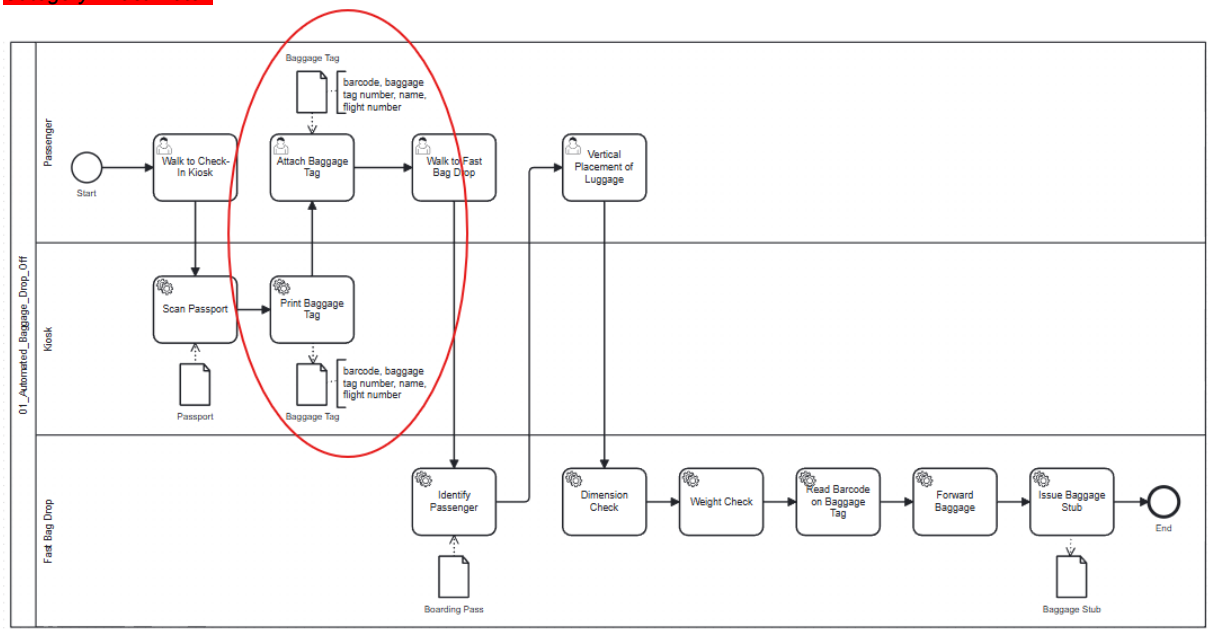

Question: Why do I need to print a Baggage Tag?

Answer A: You need to print a Baggage Tag, in order to attach it to your Baggage in the next step. Source: example6.txt Cosine similarity score: 1.0000 Q101

Answer B: You need to print a Baggage Tag because it will be attached to your luggage and help the airline staff identify your bags. This is a necessary step in the baggage handling process. Q102

Question 2) Output-Input Chain (Pattern A0)

Category Paraphrased

Question: Why do I need the Baggage Tag, which is printed by the Kiosk mashine?

Answer B: You need the Baggage Tag, which is printed by the Kiosk machine, in order to attach it to your Baggage in the next step. Source: example6.txt Cosine similarity score: 0.7994 (Q104)

Answer A: The Baggage Tag is printed by the Kiosk machine so that it can be attached to your luggage and easily identified by the airline staff. This helps them to quickly locate your baggage and ensure it's loaded onto the correct flight. (Q103)

Question 3) Output-Input Chain (Pattern A0)

Category Pattern adaptation

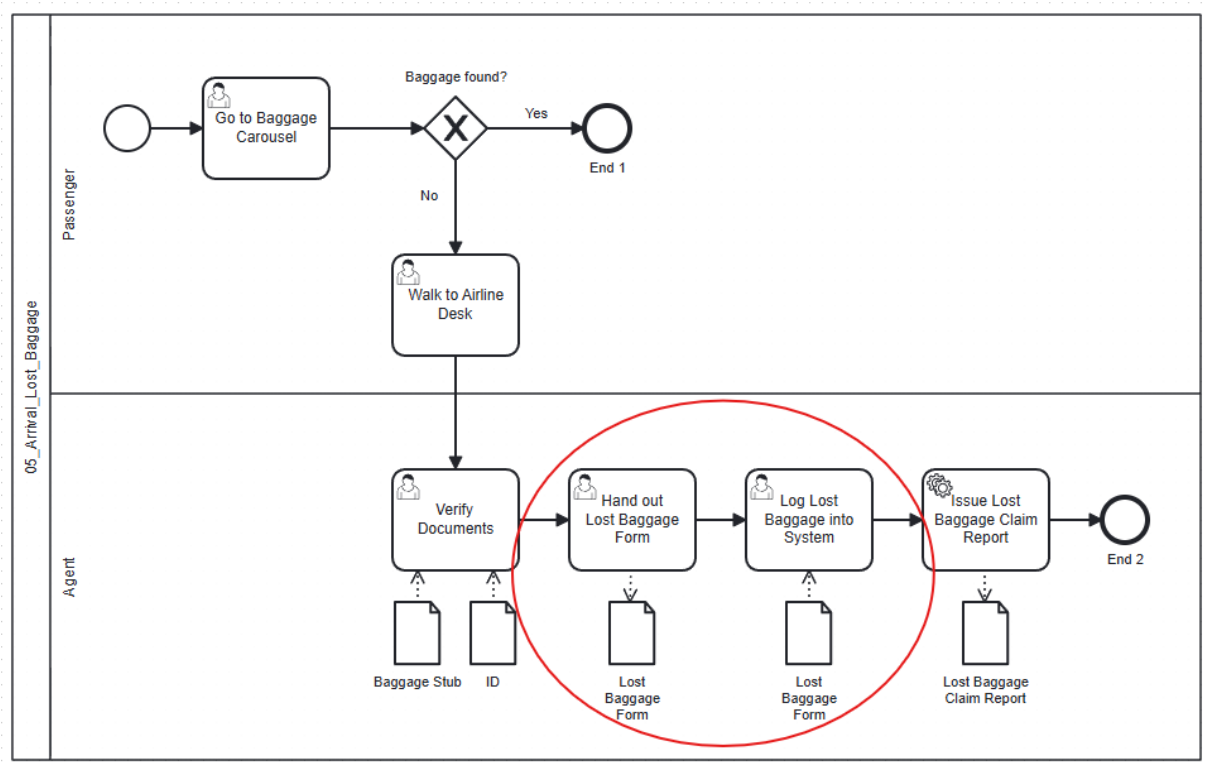

Question: Why does the agent need to print a Lost Baggage Form?

Answer A: The agent needs to print a Lost Baggage Form, in order to hand it out to the passenger in the next step. Source: example6.txt Cosine similarity score: 0.7301

(Q105)

Answer B: The agent needs to print a Lost Baggage Form because the passenger's baggage has been found and the agent needs to hand out the form to the passenger. This form is required for the passenger to claim their lost baggage.

(Q106)

Question 4) Output-Input Chain (Pattern A1)

Category Exact Match

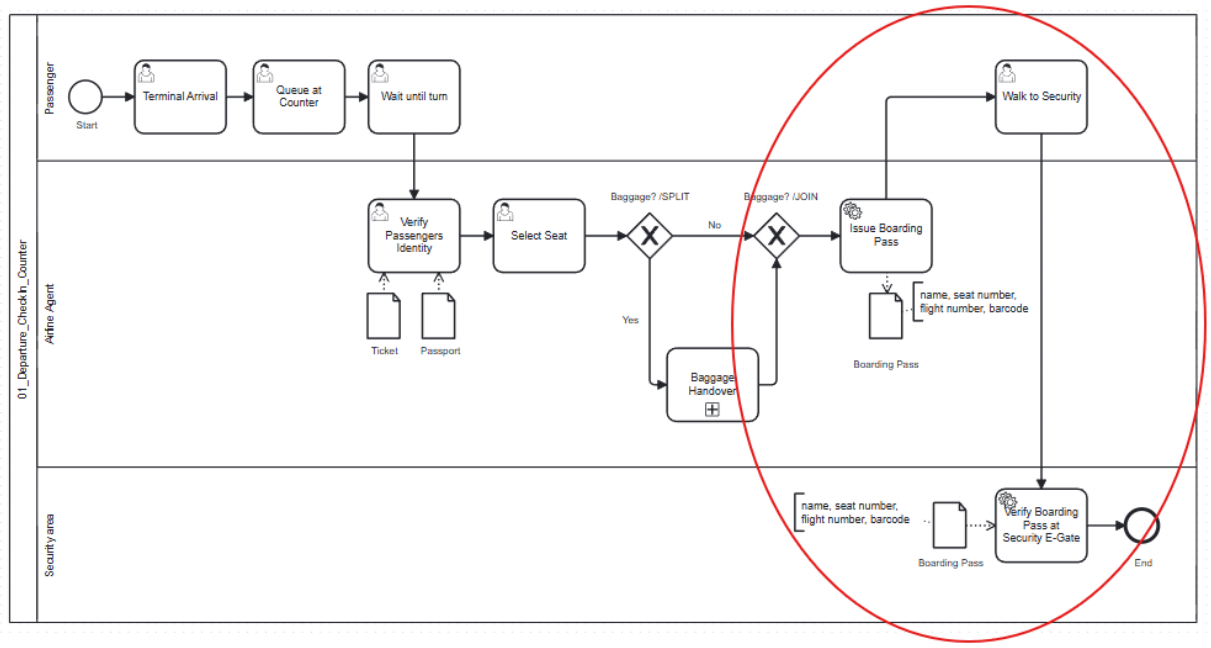

Question: Why do I need a Boarding Pass?

Answer B: You need a Boarding Pass because it contains important information such as your name, seat number, flight number, and a barcode which you will need to pass the Security E-Gate. Source: example3.txt Cosine similarity score: 1.0000 (Q123)

Answer A: You need a Boarding Pass because it contains important information about your flight, such as your seat number, flight number, and barcode. This information is used by airline staff to check you in and ensure you get on the right plane. (Q108)

Question 5) Output-Input Chain (Pattern A1)

Category Paraphrased

Question: Why does my Boarding Pass need to be issued?

Answer A: Your Boarding Pass needs to be issued because it contains important information such as your name, seat number, flight number, and a barcode which you will need to pass the Security E-Gate. Source: example3.txt Cosine similarity score: 0.9055

Answer B: Your Boarding Pass needs to be issued after the airline agent has verified your identity and selected your seat, and also after the baggage handover process

has been completed. This is because the Boarding Pass requires certain information, such as your seat number, which is only available after these steps have been completed.

Question 6) Output-Input Chain (Pattern A1)

Category Pattern adaptation

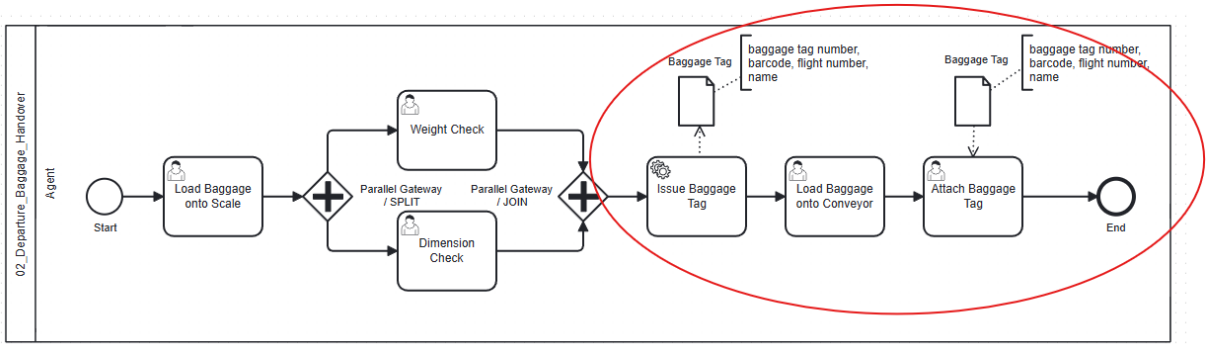

Question: Why does the agent need to print a Baggage Tag?

Answer B: The agent needs to print a Baggage Tag, in order to attach it to the Baggage in the next step. Source: example6.txt Cosine similarity score: 0.8973

Answer A: The agent needs to print a Baggage Tag because it contains important information about the baggage, such as the baggage tag number, barcode, flight number, and name. This information is used to identify and track the baggage. The Baggage Tag is printed after the baggage has been weighed and measured.

Question 7) Data Input Task (Pattern B)

Category Exact Match

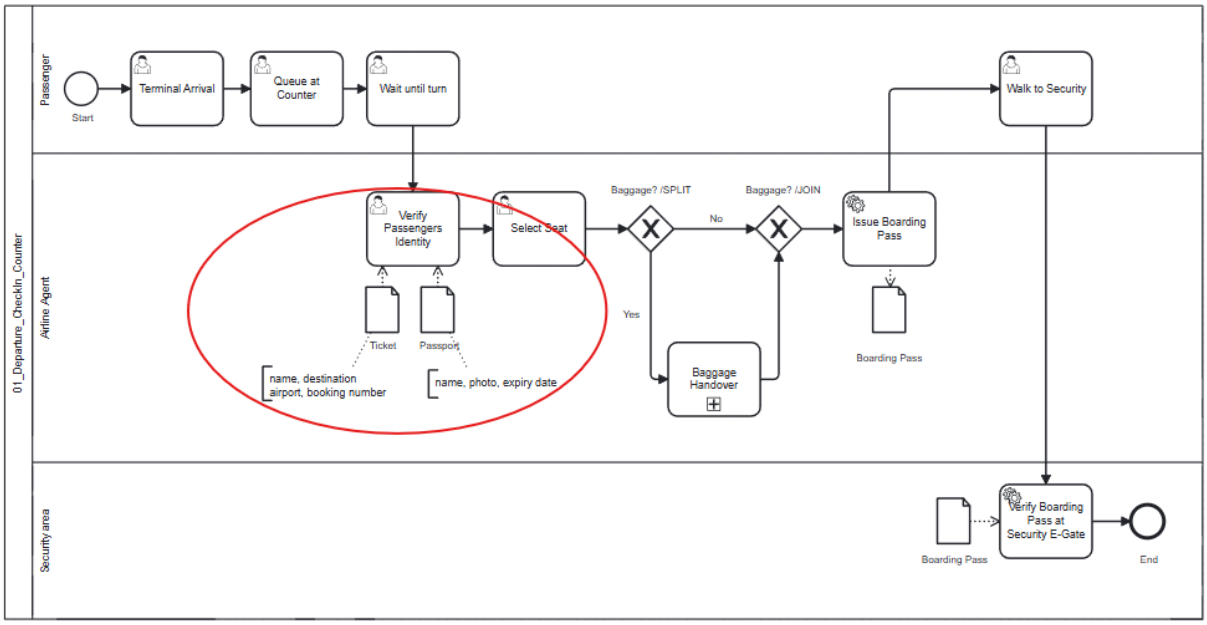

Question: Why do I need to show my Passport during Check-In?

Answer A: We need to see your Passport during Check-In because it's the only document with which we can verify who you are. We check the photo to match your face, the name to match your Ticket, and the expiry date to make sure your Passport is still valid for travel. Source: example1.txt Cosine similarity score: 1.0000

Answer B: You need to show your Passport during Check-In because it's a required document to verify your identity and ensure you're eligible to travel. This is a standard procedure for all airlines.

Question 8) Data Input Task (Pattern B)

Category Paraphrased

Question: Why does the agent need to see my Pass during Check-In?

Answer B: We need to see your Passport because it tells us everything about your identity, for instance your name so we can match it to your Ticket, your photo so we can verify your identity, and your valid until date so we know you're allowed to travel. Source: example2.txt Cosine similarity score: 0.6640

Answer A: The agent needs to see your Pass during Check-In because it's required to issue your Boarding Pass.

Question 9) Data Input Task (Pattern B)

Category Pattern adaptation

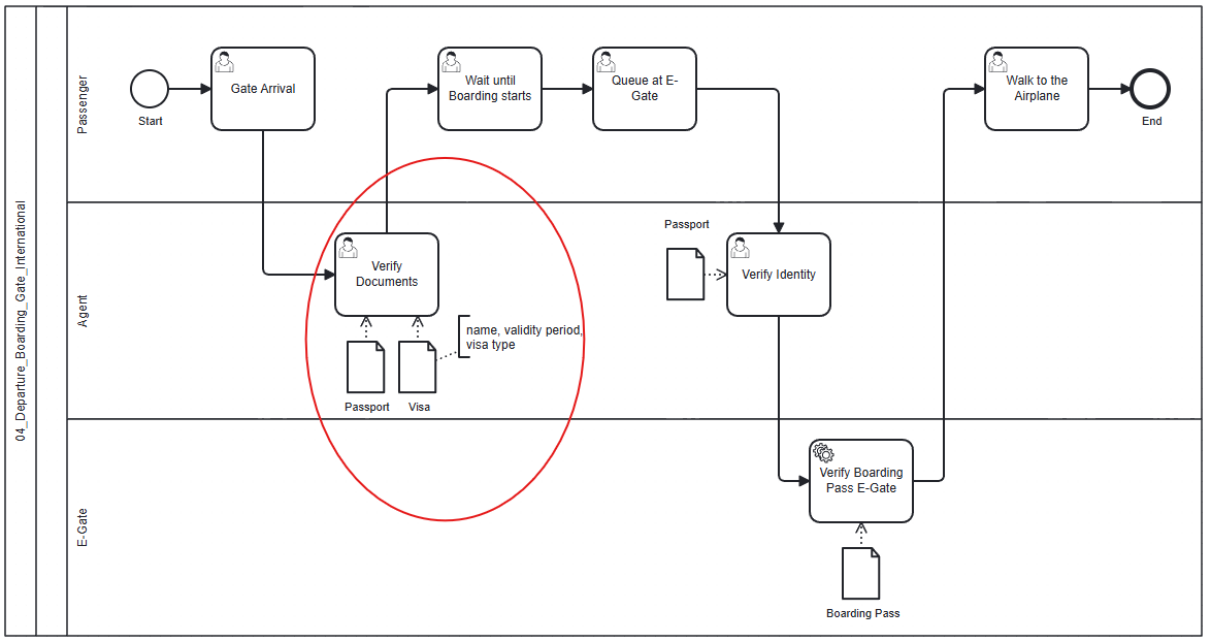

Question: Why do I need to show my Visa before Boarding?

Answer A: We need to see your Visa before Boarding because it's the only document with which we can verify who you are. We check the name to match your Ticket, and the validity period to make sure your Visa is still valid for travel. Source: example.txt1 Cosine similarity score: 0.5853

Answer B: You need to show your Visa before boarding because it's one of the documents that needs to be verified by the staff at the gate. This is a standard procedure to ensure that all passengers have the necessary documents to board the flight.

Question 10) Data Input Task (Pattern B)

Category Exact Match

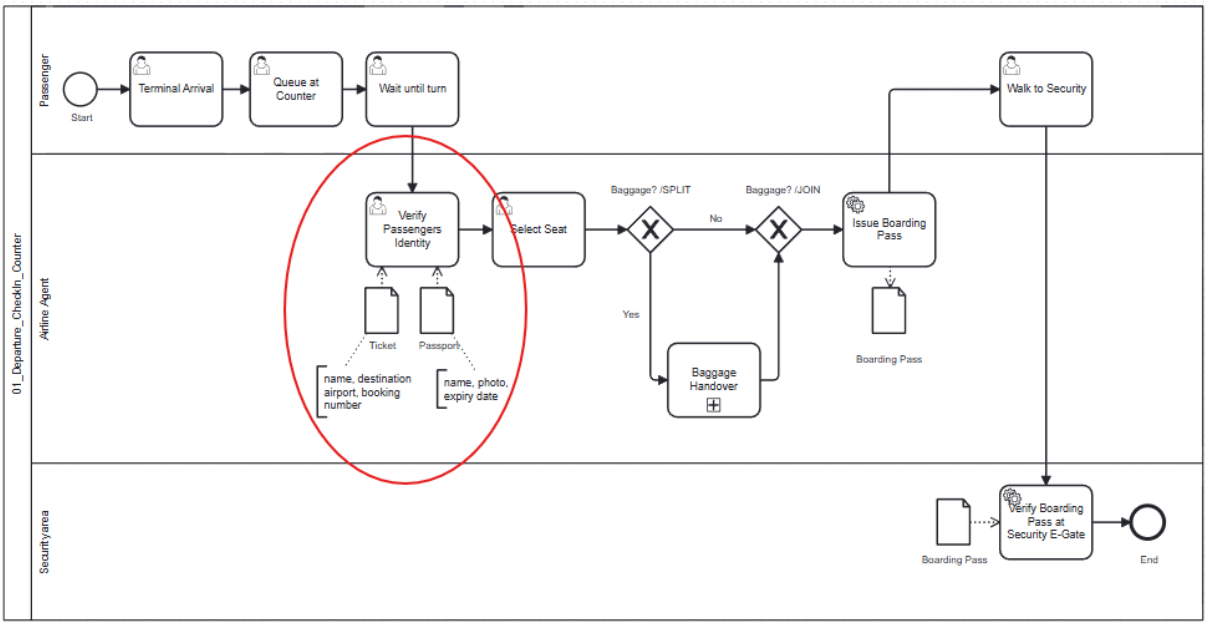

Question: Why do I need to show my Ticket during Check-In?

Answer B: We need to see your Ticket because it tells us everything about your booking, for instance your name so we can match it to your Passport, your booking number so we can pull up your reservation in our system, and your destination airport so we know which flight to check you in for. Source: example2.txt Cosine similarity score: 1.0000

Answer A: You need to show your Ticket during Check-In because the airline agent needs to verify your seat number, which is linked to your ticket. This is a required step before you can proceed with the boarding process.

Question 11) Data Input Task (Pattern B)

Category Paraphrased

Question: Why does the agent need to check my Ticket?

Answer A: We need to see your Ticket because it tells us everything about your booking, for instance your name so we can match it to your Passport, your booking number so we can pull up your reservation in our system, and your destination airport so we know which flight to check you in for. Source: example2.txt Cosine similarity: 0.7452

Answer B: The agent needs to check your Ticket because it contains information that is required to issue your Boarding Pass.

Question 12) Data Input Task (Pattern B)

Category Pattern adaptation

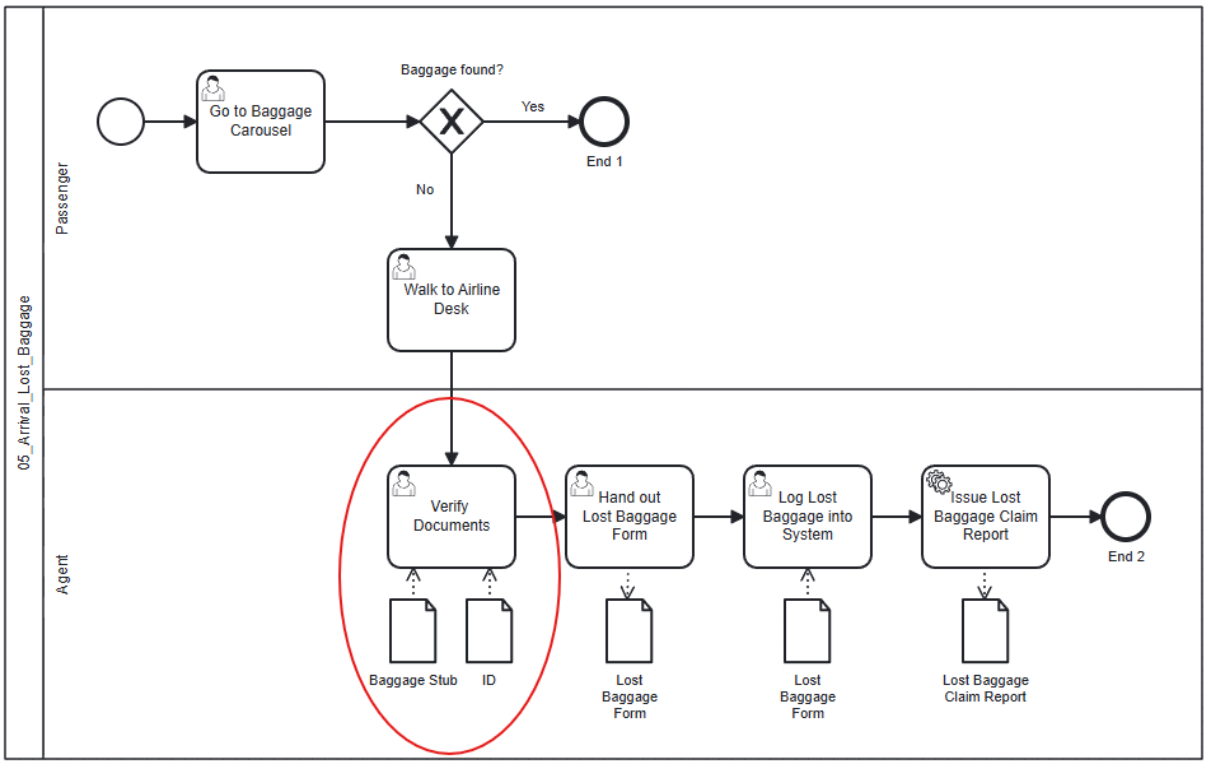

Question: Why do I need to show my Baggage Stub at the Airline Desk?

Answer B: You need to show your Baggage Stub at the Airline Desk because the information on it is required to issue a Lost Baggage Claim Report. This report is necessary to log the lost baggage into the system. Source: example6.txt Cosine similarity: 0.6063

Answer A: You need to show your Baggage Stub at the Airline Desk because it's required to verify your baggage details. The airline staff will use this information to check if your baggage is among the ones that were misplaced.

Question 13) Extention property (Pattern C)

Category Exact Match

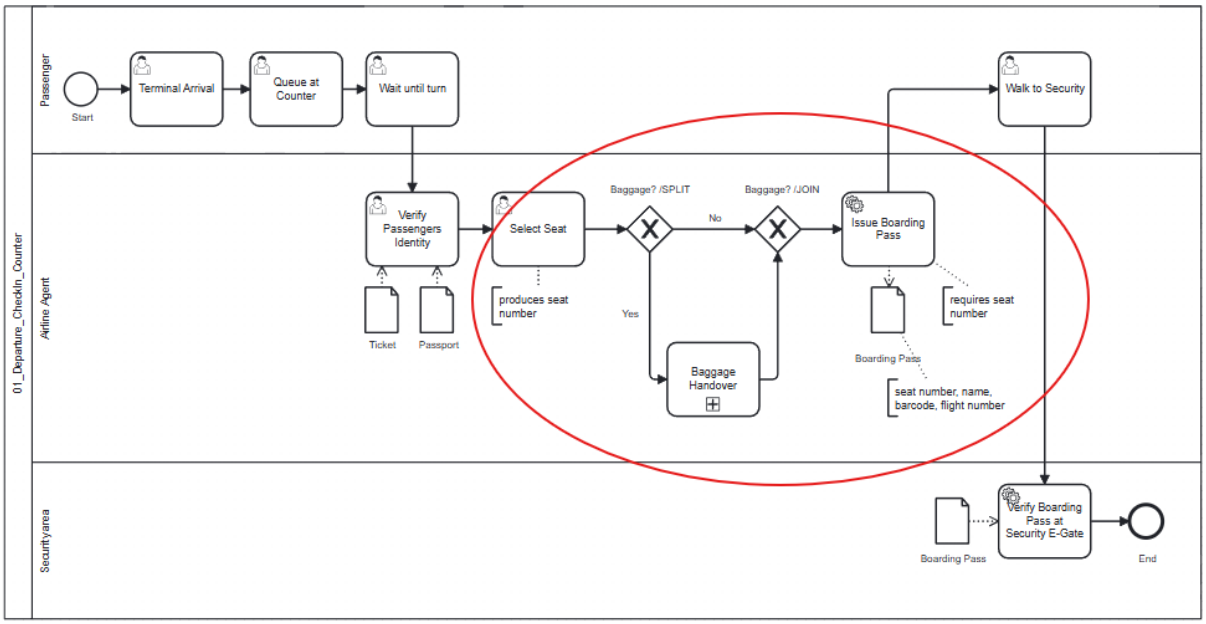

Question: Why does the agent need to assign me a seat?

Answer A: The agent needs to assign you a seat in order for the Boarding Pass to be issued, since the Boarding Pass contains your seat number. Source: example4.txt Cosine similarity: 1.0000

Answer B: The agent needs to assign you a seat because the airline needs to know where you'll be sitting on the plane. This information is required for the boarding pass.

Question 14) Extention property (Pattern C)

Category Paraphrased

Question: Why is a seat selected at all?

Answer B: The seat is selected so that the Boarding Pass can be issued, as it contains the seat number. Source: example4.txt Cosine similarity: 0.6213

Answer A: A seat is selected so that the airline can assign a specific seat to the passenger, which is then included in the boarding pass. This way, the passenger knows exactly where to sit on the plane.

Question 15) Extention property (Pattern C)

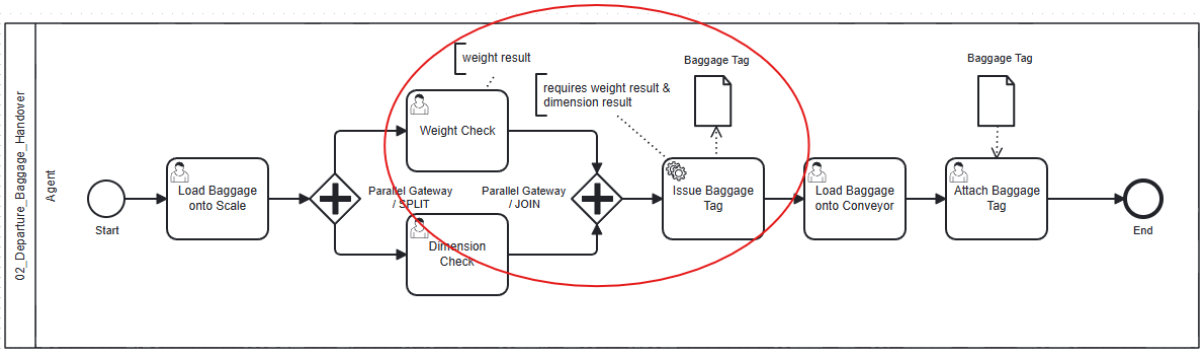

Category Pattern adaptation

Question: Why does my Baggage need to be weighed?

Answer A: The weight of your Baggage needs to be checked so that the correct baggage tag can be issued. This is a standard procedure to ensure that your Baggage is properly identified and tracked. Source: example6.txt Cosine similarity: 0.6161

Answer B: Your Baggage needs to be weighed so that the correct baggage tag can be issued. This is a standard procedure to ensure that the correct baggage is loaded onto the correct flight.

Question 16) Input-Output Chain, different objects (Pattern D)

Category Exact Match

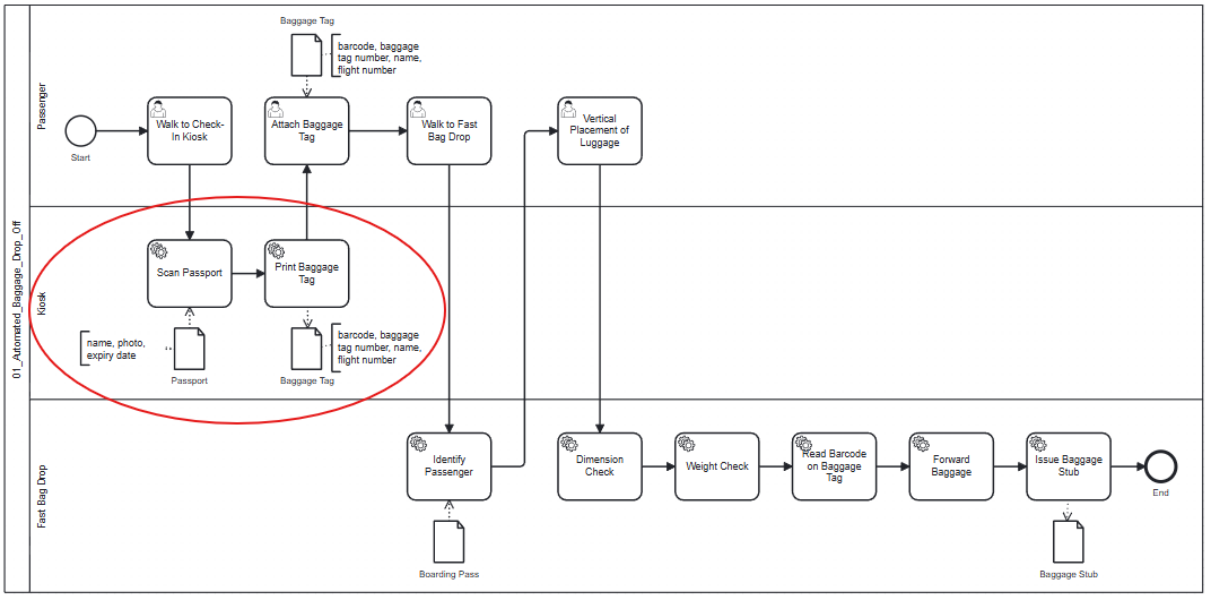

Question: Why do I need to place my Passport on the Kiosk scanner?

Answer B: You need to place your passport on the Kiosk scanner, in order for the Fast Bag Drop mashine to print out your Baggage Tag in the next step. Source: example5.txt Cosine similarity: 1.0000

Answer A: You need to place your Passport on the Kiosk scanner because the system needs to read the barcode from your passport to proceed with the baggage drop-off process.

Question 17) Input-Output Chain, different objects (Pattern D)

Category Paraphrased

Question: Why does my Passport need to be scanned?

Answer A: You need to place your passport on the Kiosk scanner, in order for the Fast Bag Drop machine to print out your Baggage Tag in the next step. Source: example5.txt Cosine similarity: 0.7489

Answer B: Your passport needs to be scanned at the Kiosk because it's required for the Reading the Barcode service task to work properly. This task needs the barcode from your passport to proceed with the baggage handling process.

Question 18) Input-Output Chain, different objects (Pattern D)

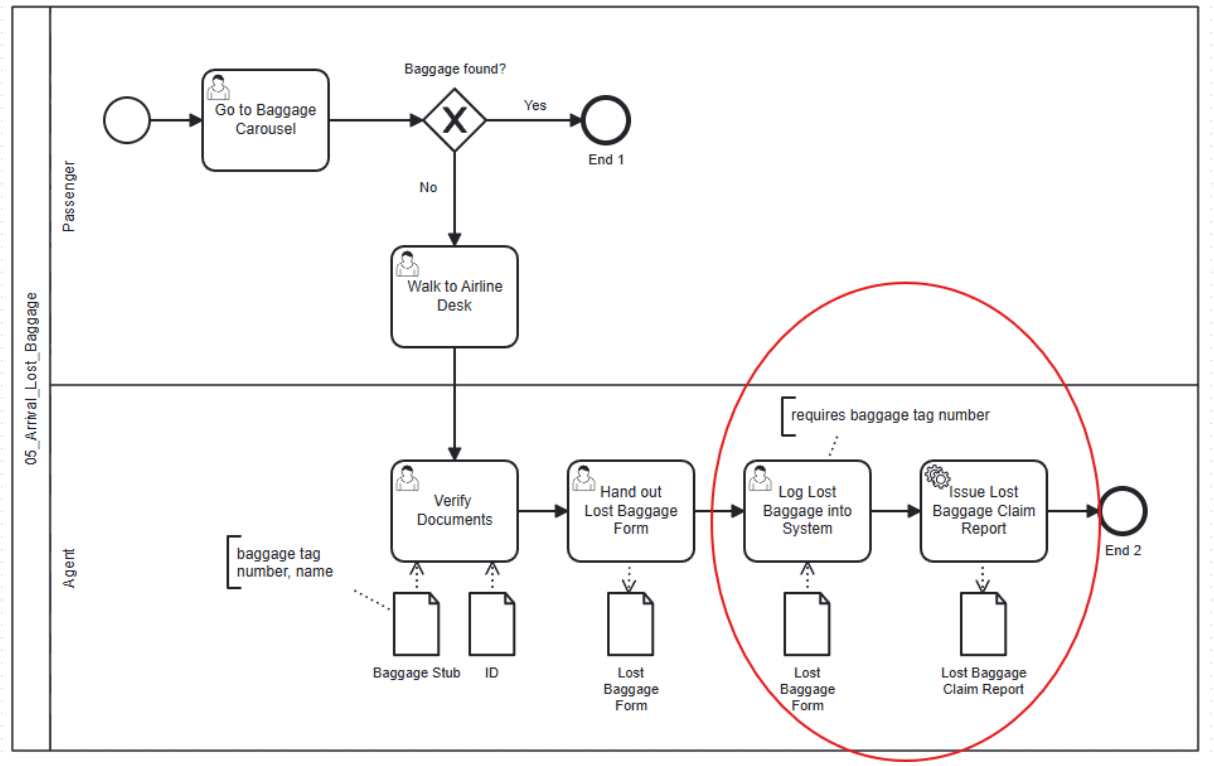

Category Pattern adaptation

Question: Why do I hand in my lost Baggage Form?

Answer B: You hand in your lost Baggage Form to the Agent so that they can log the lost baggage into the system. This is necessary because the system requires the baggage tag number to process the lost baggage claim. Source: example6.txt Cosine similarity: 0.5702

Answer A: You hand in your lost Baggage Form so that we can verify your identity and check if your baggage is indeed missing. This form will be used to process your lost baggage claim.