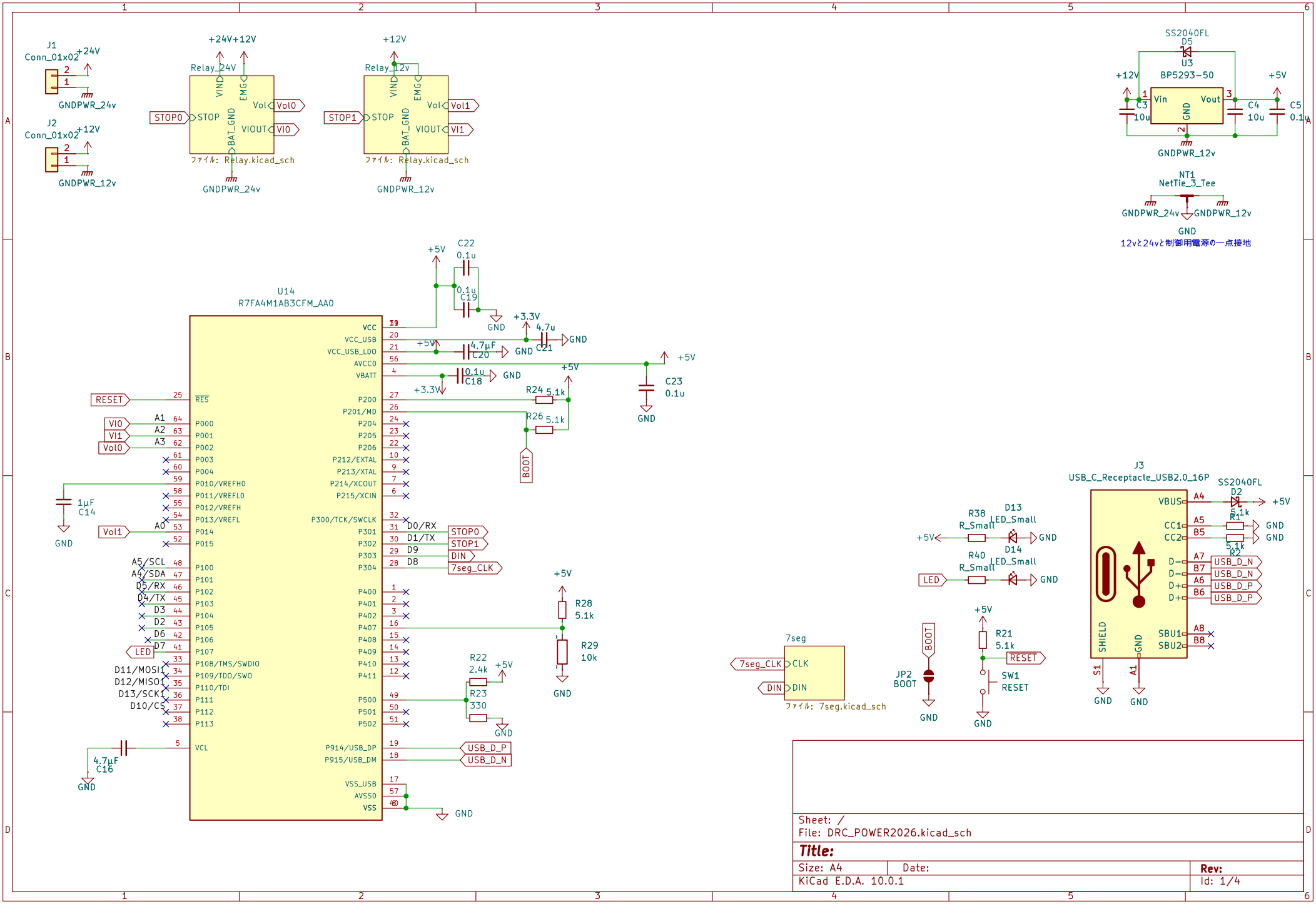
J1
Conn_01x02
+24V
GNDPWR_24v
J2
Conn_01x02
+12V
GNDPWR_12v
+24V+12V
Relay_24V
VIND
EMG
STOP0
STOP
Vol
Vol0
BAT_GND
VIOUT
VI0
ファイル: Relay.kicad_sch
GNDPWR_24v
+12V
Relay_12v
STOP1
Vol1
VI1
ファイル: Relay.kicad_sch
GNDPWR_12v
SS2040FL
D5
U3
BP5293-50
+12V
+5V
Vin
Vout
GND
C3
10u
C4
10u
C5
0.1u
GNDPWR_12v
NT1
NetTie_3_Tee
GNDPWR_24v
GNDPWR_12v
GND
12vと24vと制御用電源の一点接地
U14
R7FA4M1AB3CFM_AA0
VCC
VCC_USB
VCC_USB_LDO
AVCC0
VBATT
RES
P000
P001
P002
P003
P004
P010/VREFH0
P011/VREFL0
P012/VREFH
P013/VREFL
P014
P015
P100
P101
P102
P103
P104
P105
P106
P107
P108/TMS/SWDIO
P109/TDO/SWO
P110/TDI
P111
P112
P113
VCL
P200
P201/MD
P204
P205
P206
P212/EXTAL
P213/XTAL
P214/XCOUT
P215/XCIN
P300/TCK/SWCLK
P301
P302
P303
P304
P400
P401
P402
P407
P408
P409
P410
P411
P500
P501
P502
P914/USB_DP
P915/USB_DM
VSS_USB
AVSS0
VSS
RESET
VI0
VI1
Vol0
Vol1
A1
A2
A3
A0
1μF
C14
A5/SCL
A4/SDA
D5/RX
D4/TX
D3
D2
D6
D7
LED
D11/MOSI1
D12/MISO1
D13/SCK1
D10/CS
4.7μF
C16
D0/RX
D1/TX
D9
D8
STOP0
STOP1
DIN
7seg_CLK
USB_D_P
USB_D_N
C22
0.1u
C19
0.1u
+3.3V
4.7u
C21
4.7μF
C20
0.1u
C18
R24
5.1k
R26
5.1k
BOOT
C23
0.1u
R28
5.1k
R29
10k
R22
2.4k
R23
330
GND
7seg
7seg_CLK
CLK
DIN
ファイル: 7seg.kicad_sch
R38
R_Small
D13
LED_Small
R40
R_Small
D14
LED_Small
JP2
BOOT
R21
5.1k
SW1
RESET
J3
USB_C_Receptacle_USB2.0_16P
SS2040FL
D2
R1
5.1k
R2
5.1k
VBUS
CC1
CC2
D−
D−
D+
D+
SHIELD
SBU1
SBU2
S1
A1
A4
A5
B5
A7
B7
A6
B6
A8
B8
Sheet: /
File: DRC_POWER2026.kicad_sch
Title:
Size: A4
Date:
Rev:
KiCad E.D.A. 10.0.1
Id: 1/4

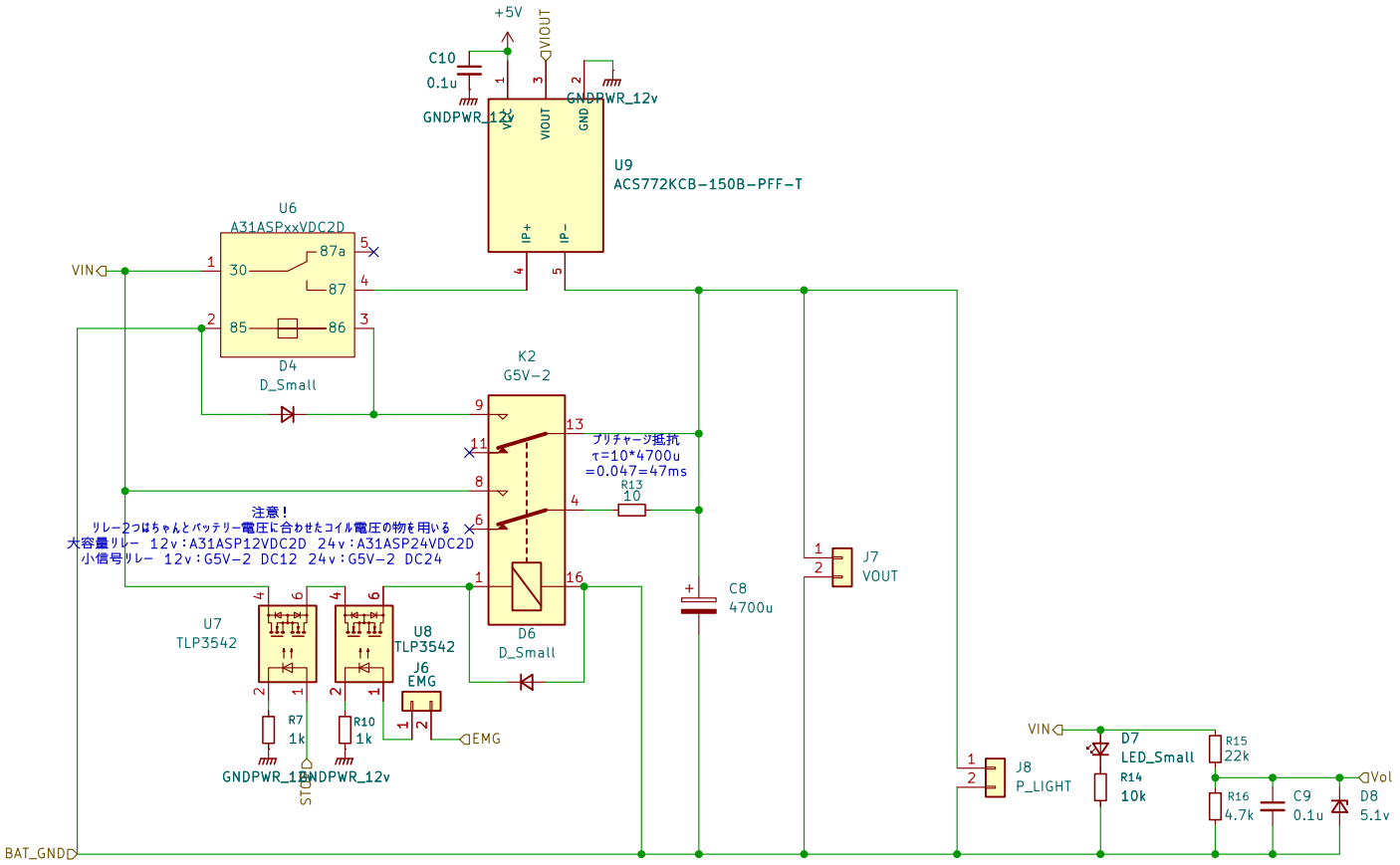


Sheet: /Relay_24V/
File: Relay.kicad_sch

**Title:**

| Size: A4 | Date: | Rev: |
|---|---|---|
| KiCad E.D.A. 10.0.1 | | Id: 2/4 |

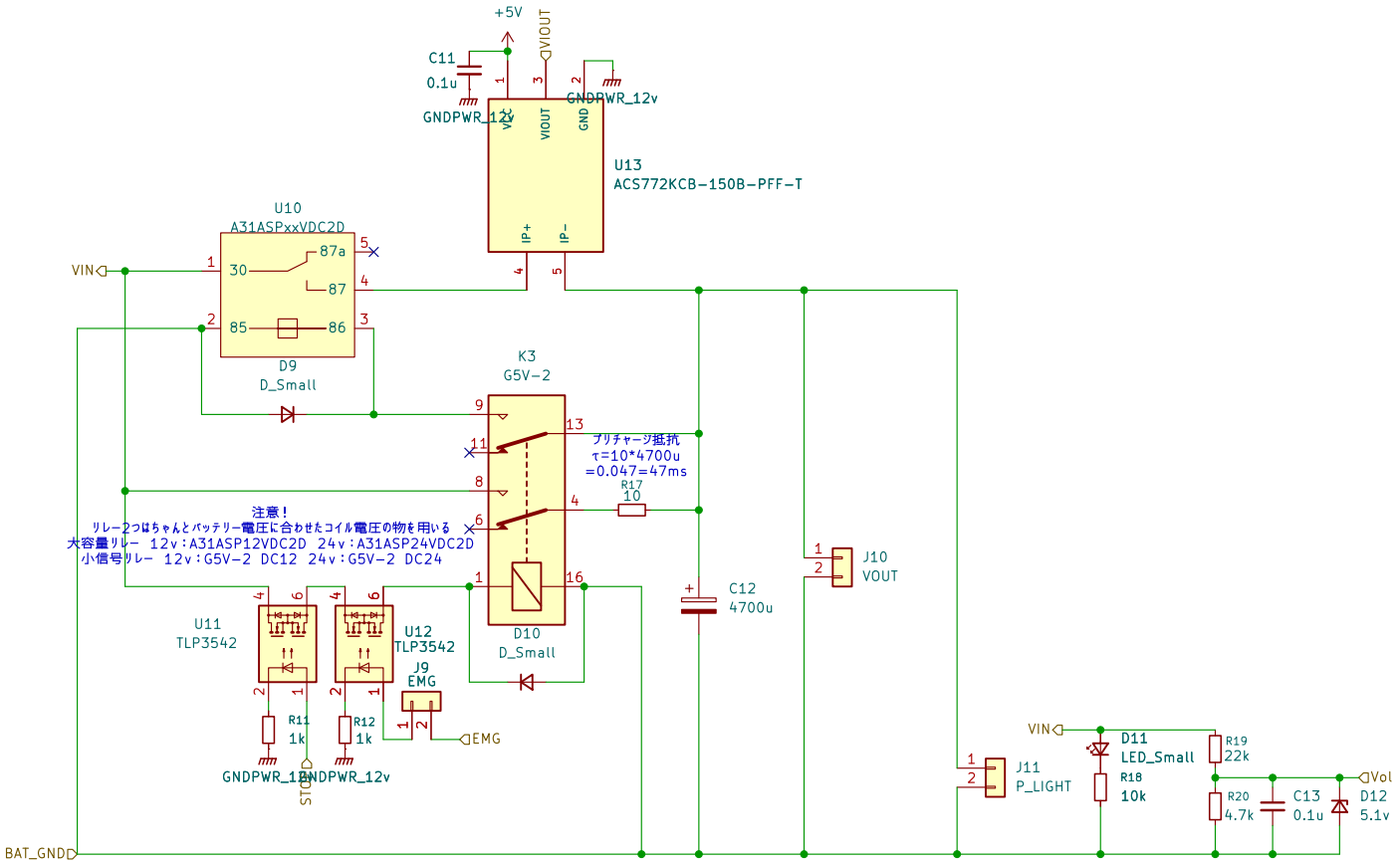


Sheet: /Relay_12v/
File: Relay.kicad_sch

**Title:**

| Size: A4 | Date: | Rev: |
|---|---|---|
| KiCad E.D.A. 10.0.1 | | Id: 3/4 |

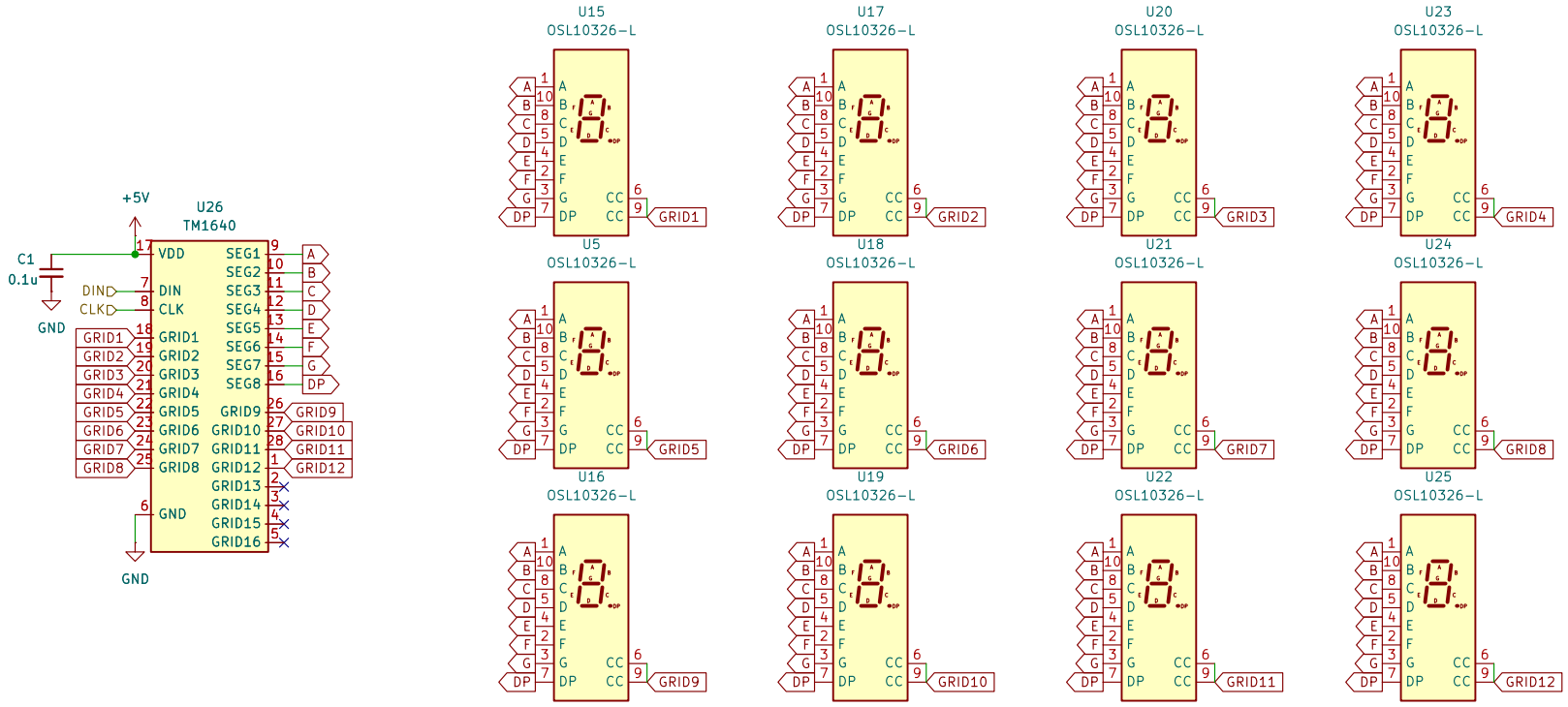


Sheet: /7seg/
File: 7seg.kicad_sch

**Title:**

| | | |
|---|---|---|
| Size: A4 | Date: | **Rev:** |
| KiCad E.D.A. 10.0.1 | | Id: 4/4 |