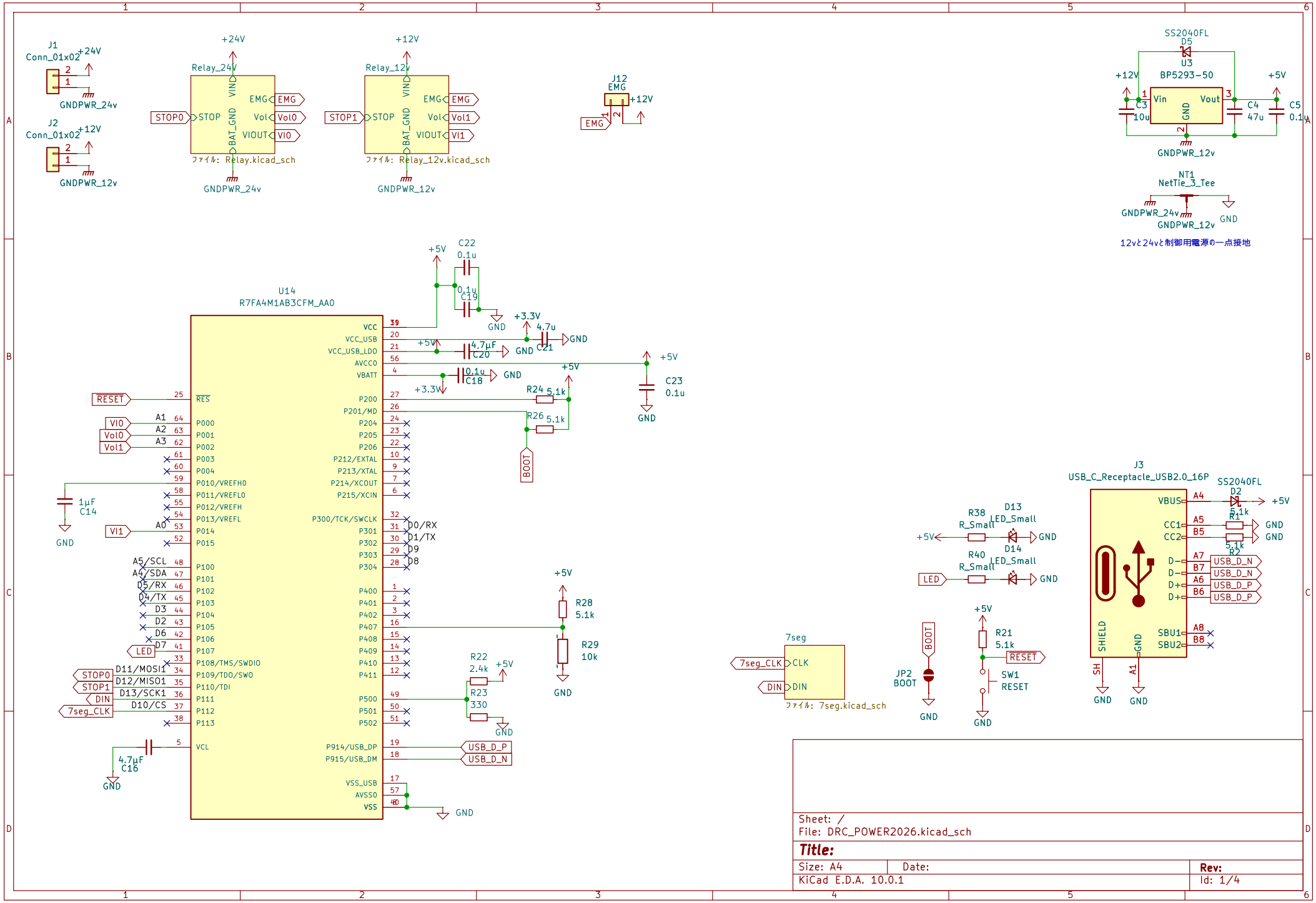


Sheet: /
File: DRC_POWER2026.kicad_sch

**Title:**

| Size: A4 | Date: | Rev: |
|---|---|---|
| KiCad E.D.A. 10.0.1 | | Id: 1/4 |

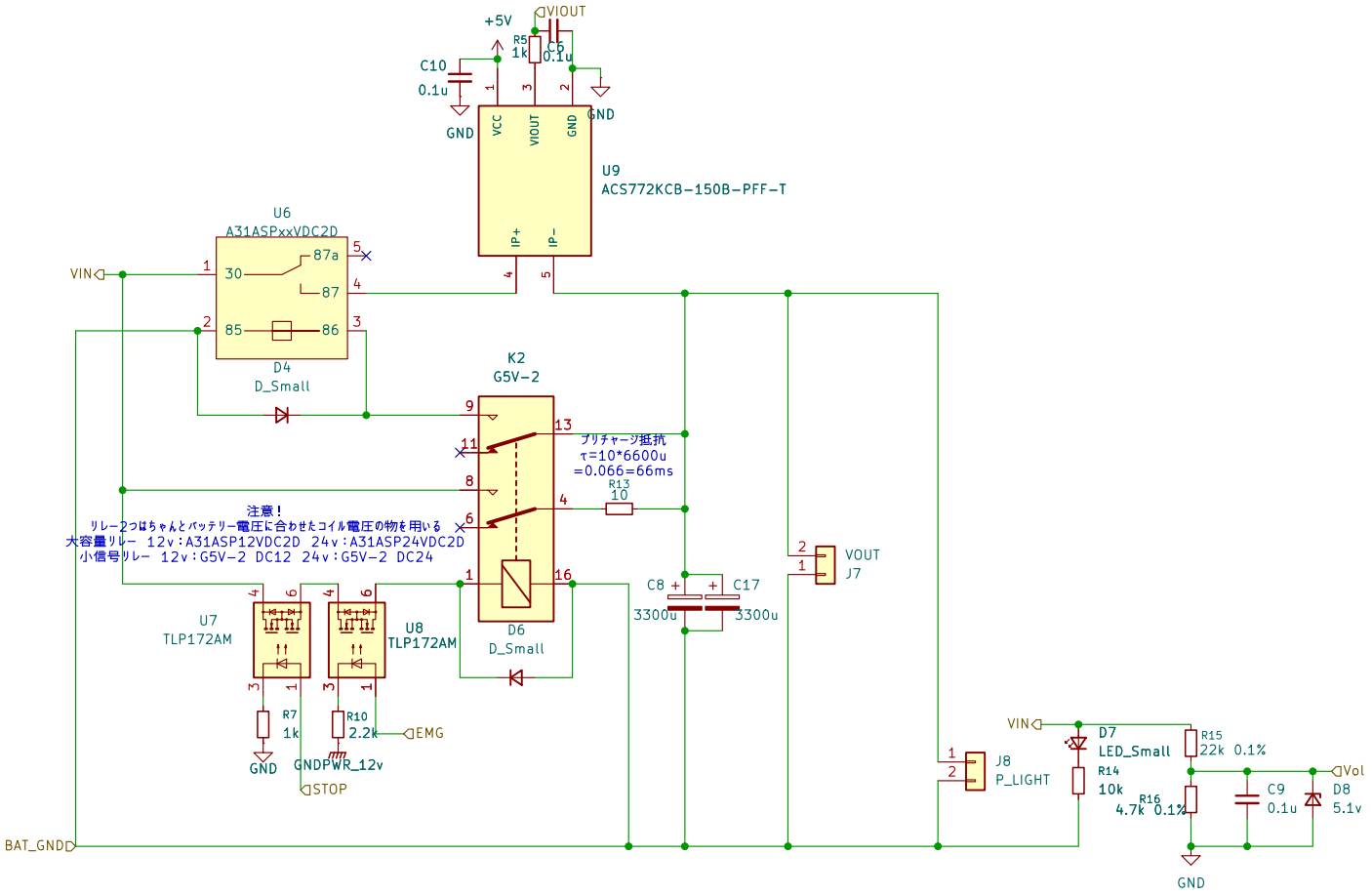


Sheet: /Relay_24V/
File: Relay.kicad_sch

**Title:**

| Size: A4 | Date: | Rev: |
|---|---|---|
| KiCad E.D.A. 10.0.1 | | Id: 2/4 |

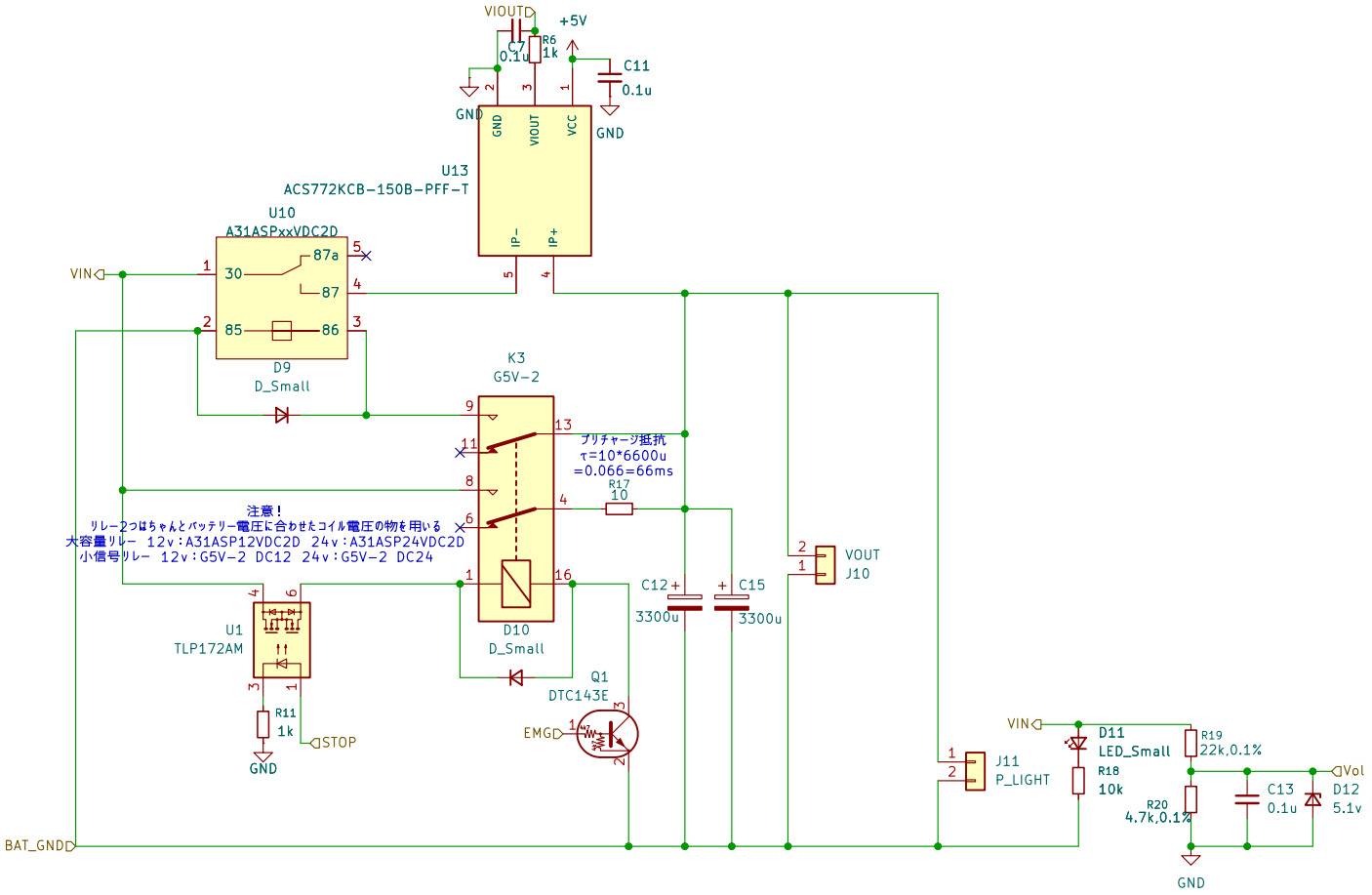


Sheet: /Relay_12v/
File: Relay_12v.kicad_sch

**Title:**

| Size: A4 | Date: | Rev: |
|---|---|---|
| KiCad E.D.A. 10.0.1 | | Id: 3/4 |

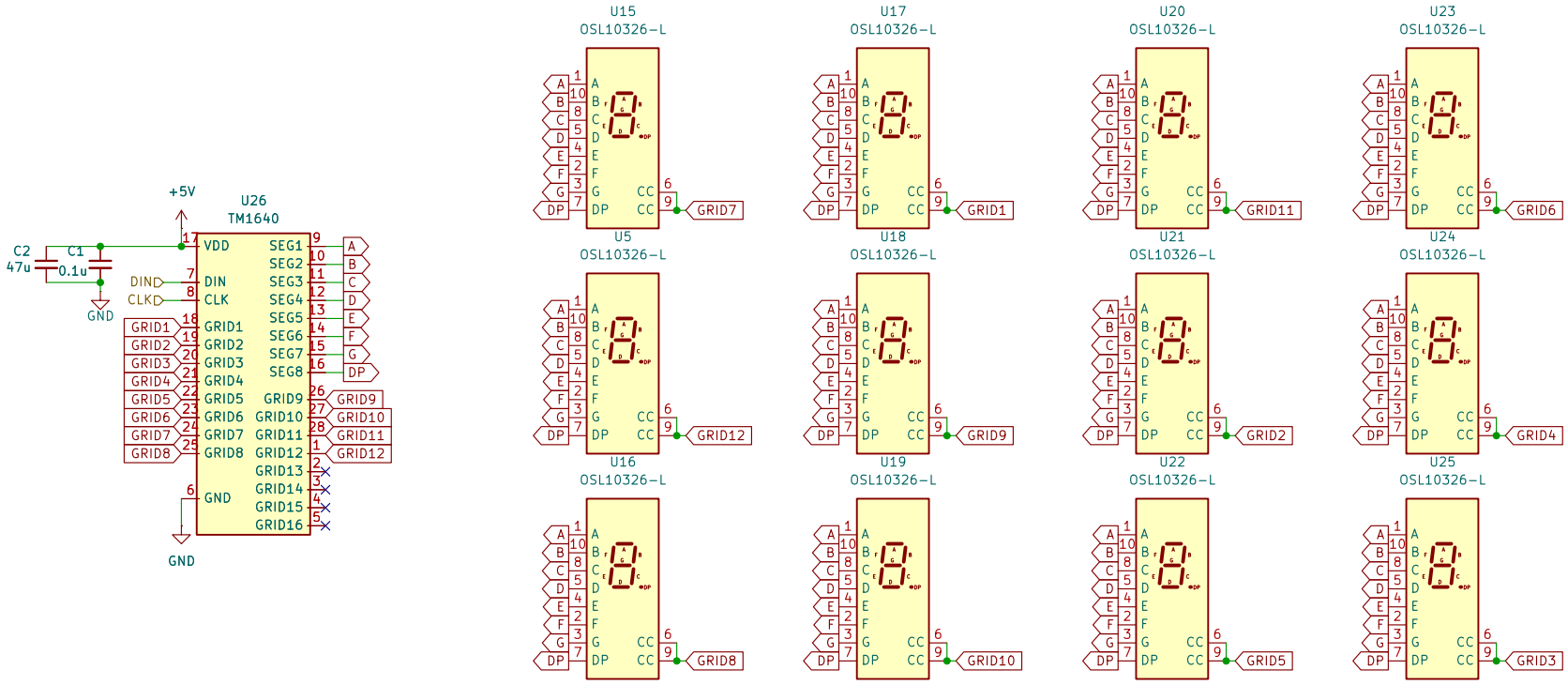


Sheet: /7seg/
File: 7seg.kicad_sch

**Title:**

| Size: A4 | Date: | Rev: |
|---|---|---|
| KiCad E.D.A. 10.0.1 | | Id: 4/4 |