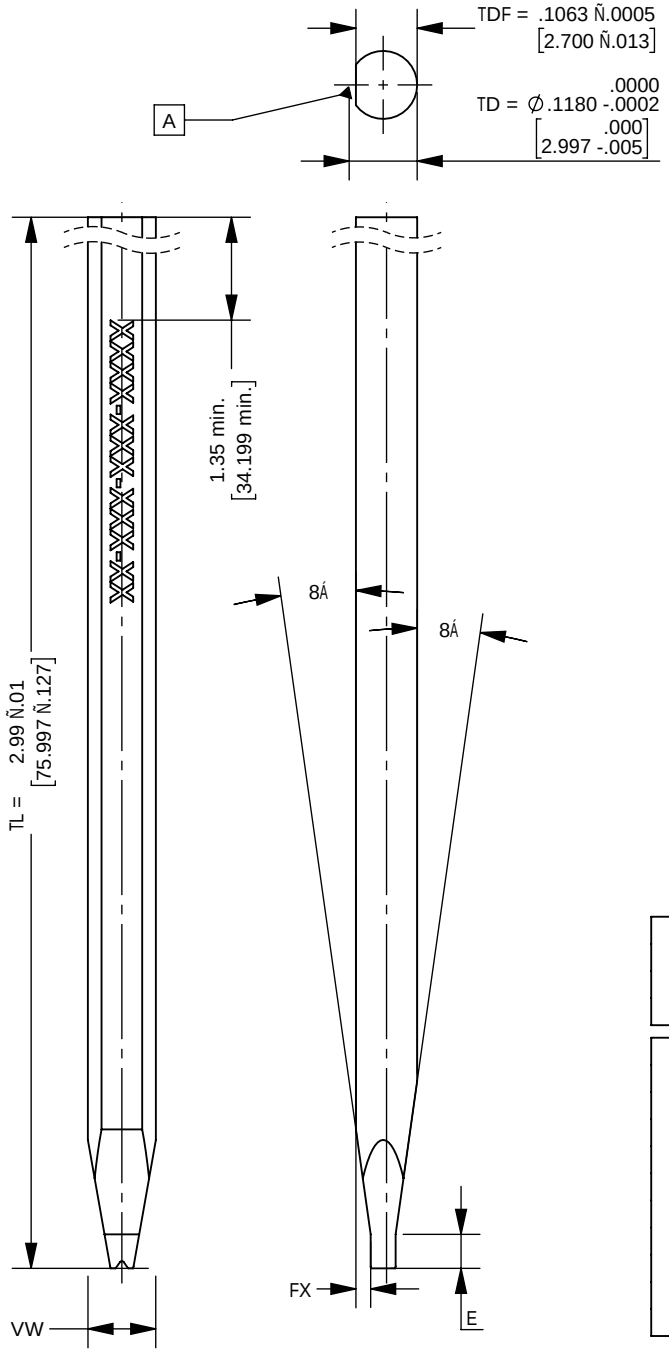

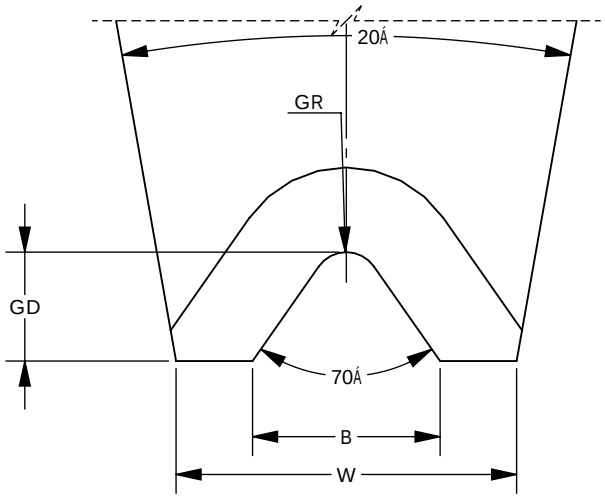

⌯	0.0400	[0.04]	A

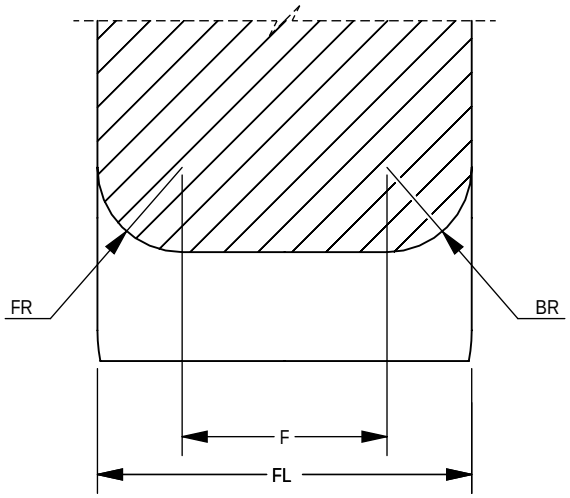

HOW TO ORDER
CKVD-500-G SPECIAL (2027632)
Plastic Box

DIMENSIONS:
FL = .0433 Ñ.0005 [1.100 Ñ0.0127]
F = .0236 [0.599] (REF)
W = .0394 Ñ.0005 [1.001 Ñ0.0127]
FR = .0098 [0.249] (REF)
BR = .0098 [0.249] (REF)
GD = .0126 Ñ.0004 [0.320 Ñ0.0102]
GR = .0039 [0.099] (REF)
B = .0217 Ñ.0007 [0.551 Ñ0.0178]
E = .0590 Ñ.0012 [1.499 Ñ0.0305]

PROPERTY OF
SMALL PRECISION TOOLS
DUPLICATION STRICTLY
PROHIBITED

UNLESS OTHERWISE SPECIFIED INCH [mm] .XX = Ñ .01 [0.25] .XXX = Ñ .005 [0.127] FRACTIONS = Ñ 1/64 [0.40] ANGLE = Ñ 1Á FINISH: ALL SURFACES 8 MAX	PRODUCTION DRAWN: AUTODRAW SERVICE DATE: 06-19-25	SPT small precision tools 1330 CLEGG STREET PETALUMA, CALIFORNIA 94954	
	SCALES: 3:1- front view 3:1- side view 3:1- top view 45:1- detail view 45:1- section view	TITLE: CKVD-500-G SPECIAL (2027632)	
3rd ANGLE PROJECTION		MATERIAL: CARBIDE	SIZE: DIN A4 / DRAWING NR.: 2027632-DW