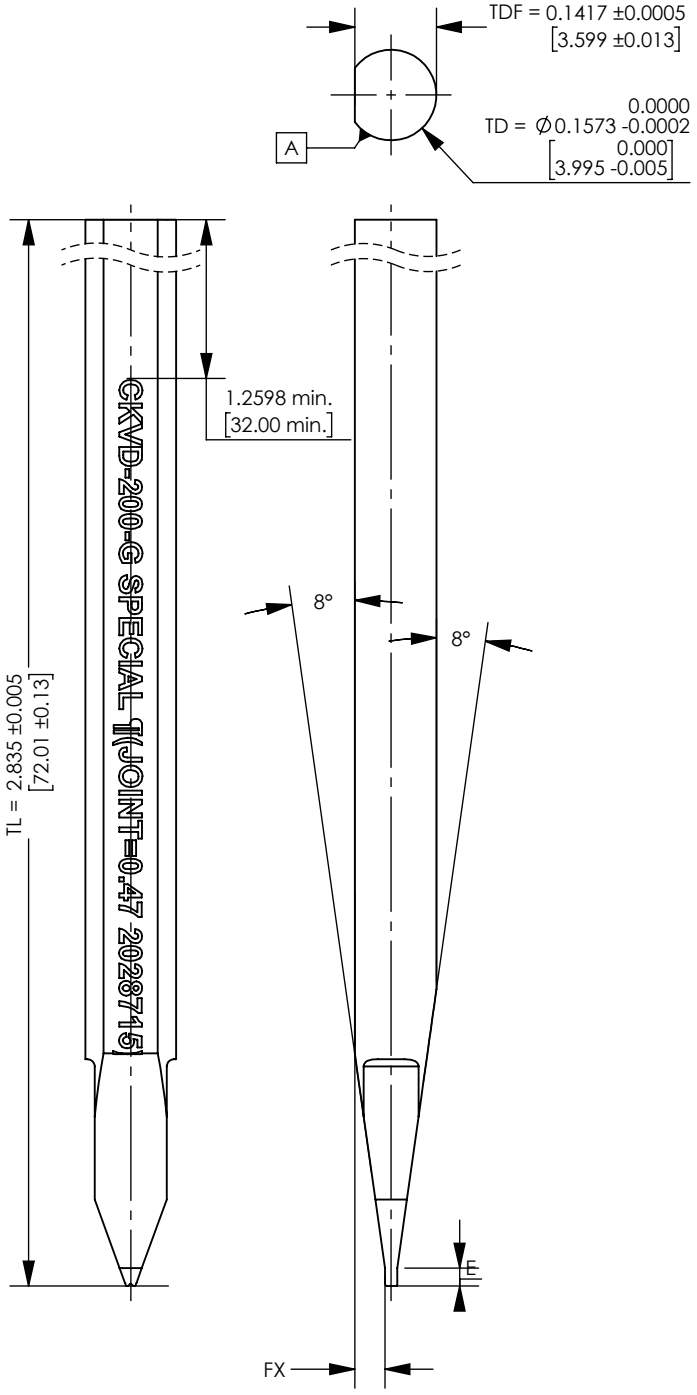

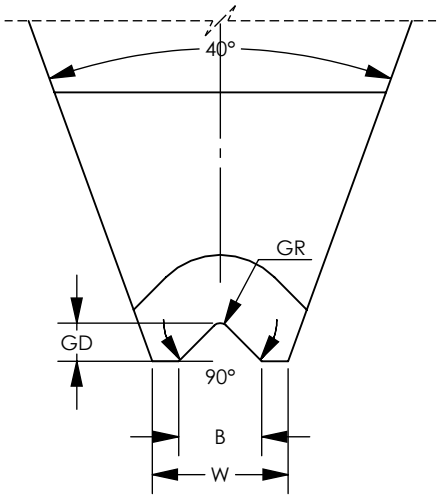

⌯	0.0400	[0.04]	A

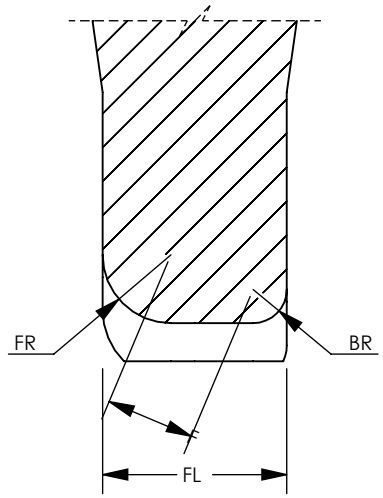

HOW TO ORDER
2028715-TF-A - Production Copy
Plastic Box

DIMENSIONS:
FL: 0.0213 Inch (+0.0003/-0.0003)
F: 0.0094 Inch
W: 0.0157 Inch (+0.0003/-0.0003)
FR: 0.0079 Inch
BR: 0.0039 Inch
GD: 0.0044 Inch (+0.0003/-0.0003)
GR: 0.0010 Inch
B: 0.0096 Inch (+0.0006/-0.0006)
E: 0.0311 Inch (+0.0012/-0.0012)
X: 0.0374 Inch (+0.0012/-0.0012)
VR: 0.3937 Inch (+0.0051/-0.0000)
VW: 0.1252 Inch (+0.0012/-0.0012)

PROPERTY OF
SMALL PRECISION TOOLS
DUPLICATION STRICTLY
PROHIBITED

UNLESS OTHERWISE SPECIFIED INCH [mm] .XX = ± .01 [0.25] .XXX = ± .005 [0.127] FRACTIONS = ± 1/64 [0.40] ANGLE = ± 1° FINISH: ALL SURFACES 8 MAX	PRODUCTION COPY DRAWN: AUTODRAW SERVICE DATE: 5/5/2025	SPT small precision tools 1330 CLEGG STREET PETALUMA, CALIFORNIA 94954	
3rd ANGLE PROJECTION	SCALES: 3:1- front view 3:1- side view 3:1- top view 45:1- detail view 45:1- section view	TITLE: 2028715-TF-A - Production Copy	
		MATERIAL: CARBIDE	SIZE: DIN A4 / DRAWING NR.: 2028715-DW