Partname :overlay_2027632-TF-A

CKVD-500-G SPECIAL (TDF=2.7 MM X=0 MM
JOINT=1.50 MM FL=1.1 MM 90GA C2 overlay_2027632)
100X

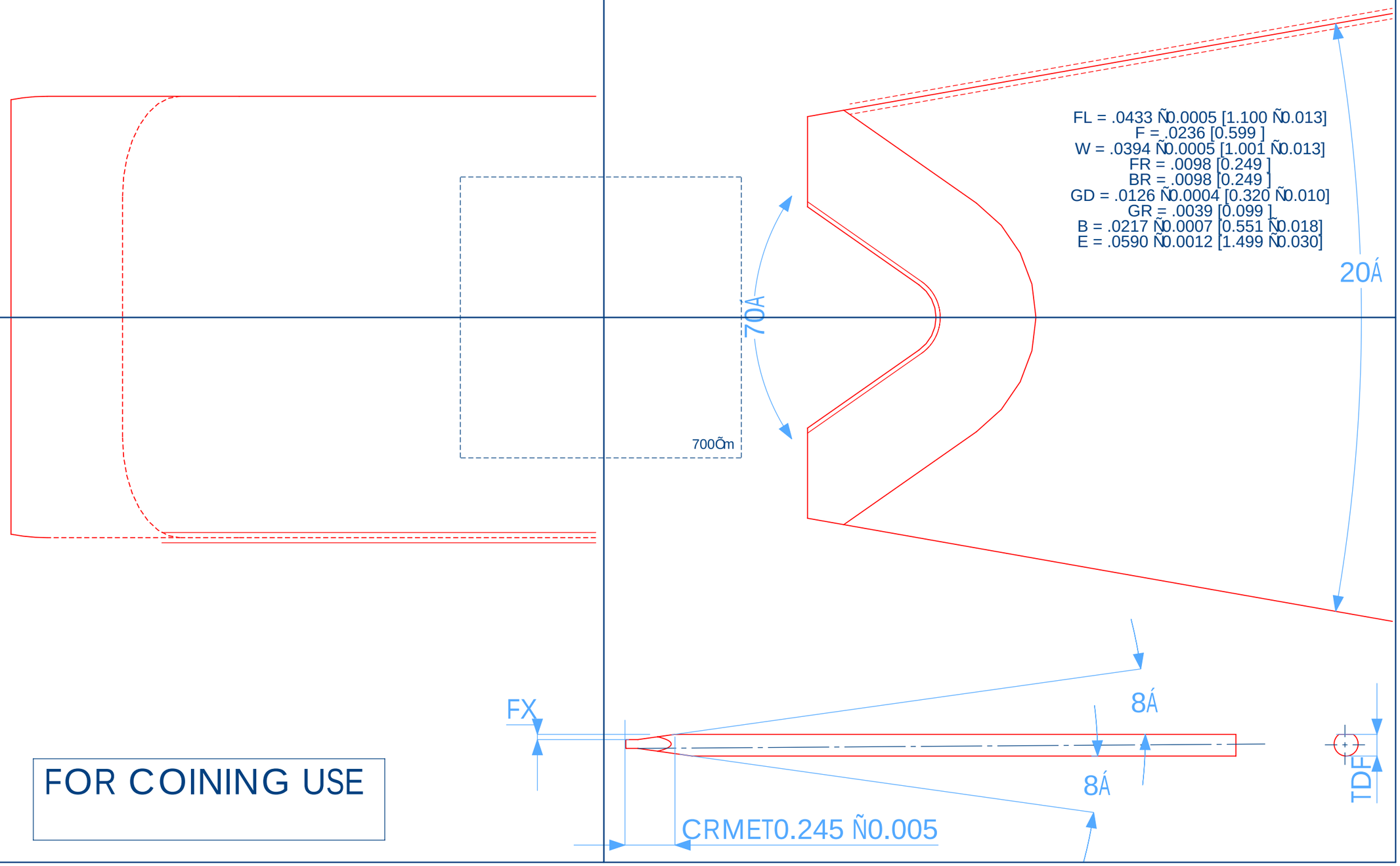


FOR COINING USE