Partname :overlay_22101937-TF-A

CKVD-500-G SPECIAL (TDF=2.7 MM X=0 MM
JOINT=1.50 MM FL=0.65 MM 90GA C2 overlay_22101937)
100X

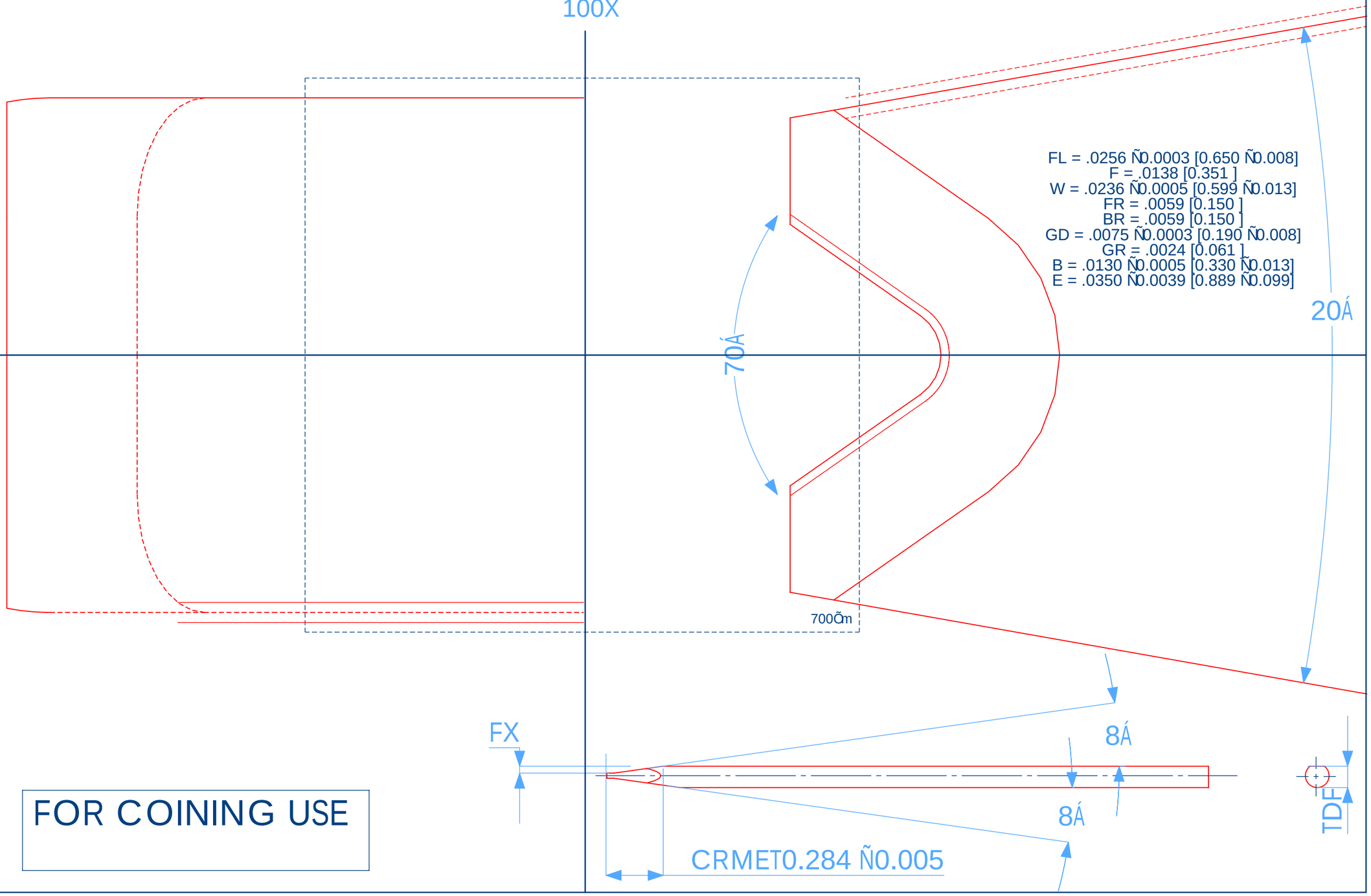

FOR COINING USE