Partname :overlay_2028715-TF-A

CKVD-500-G SPECIAL (TDF=3.6 MM X=0.95 MM
JOINT=1.50 MM FL=0.54 MM 90GA C2 overlay_2028715)
100X

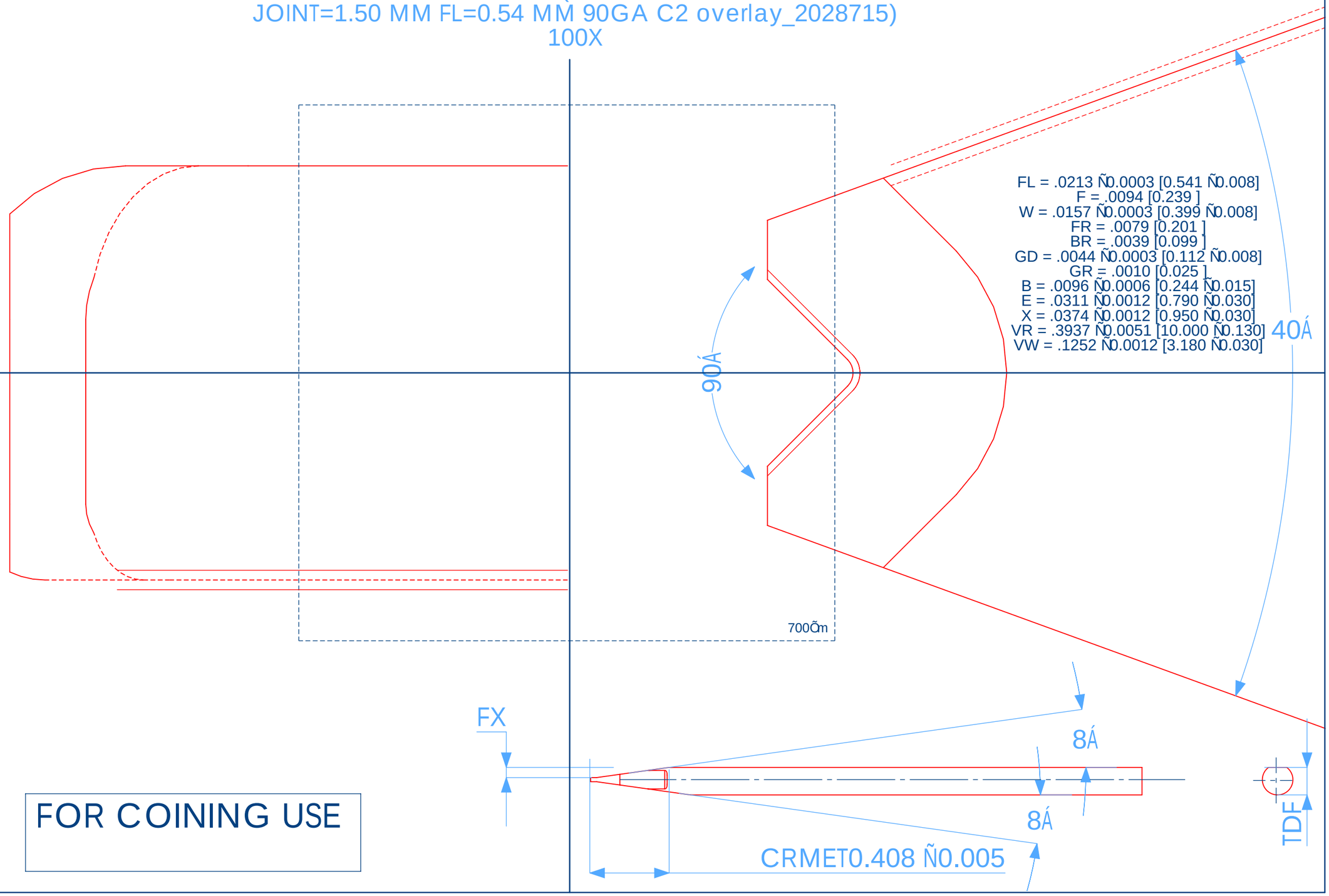

FOR COINING USE