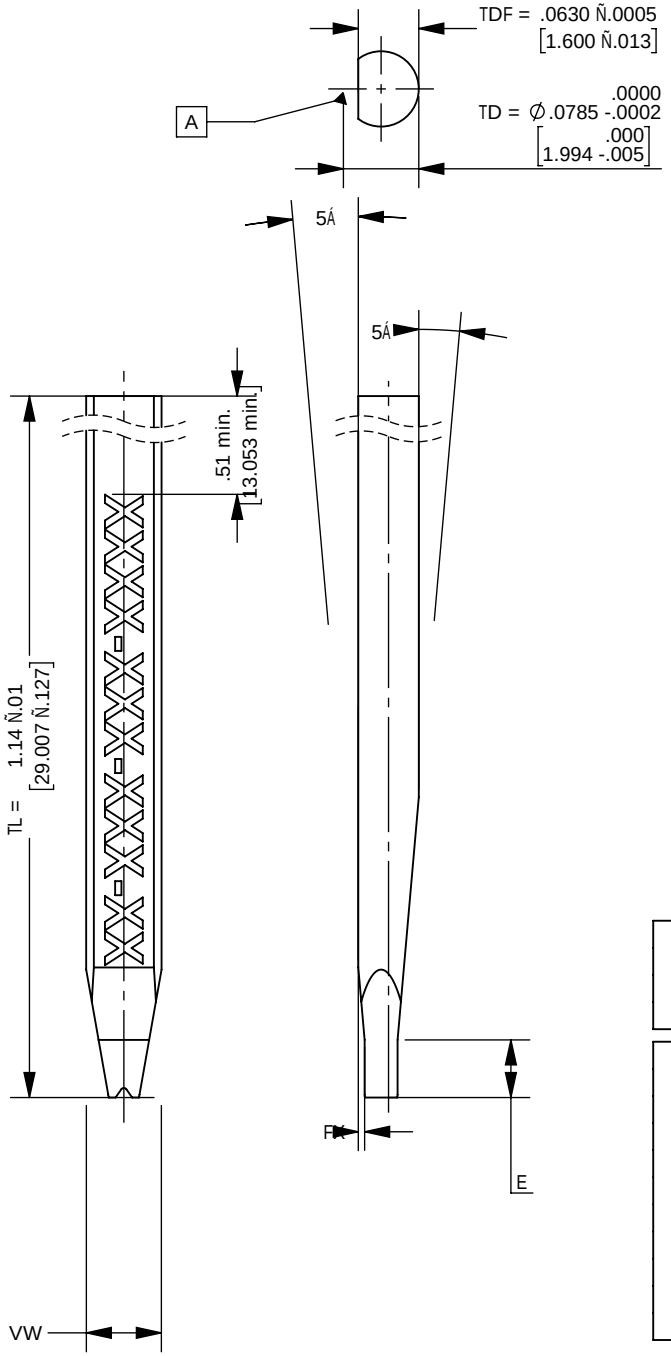

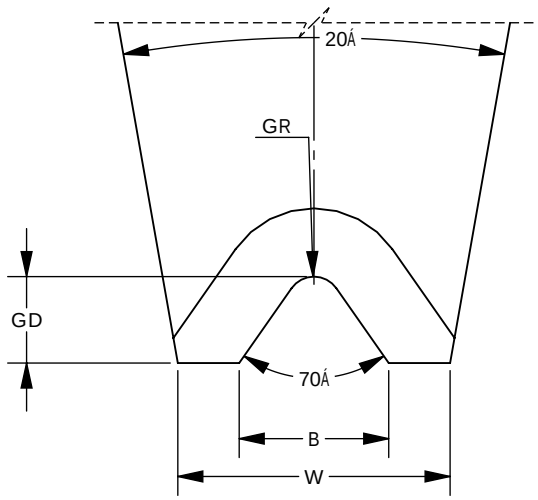

⌯	0.0400	[0.04]	A

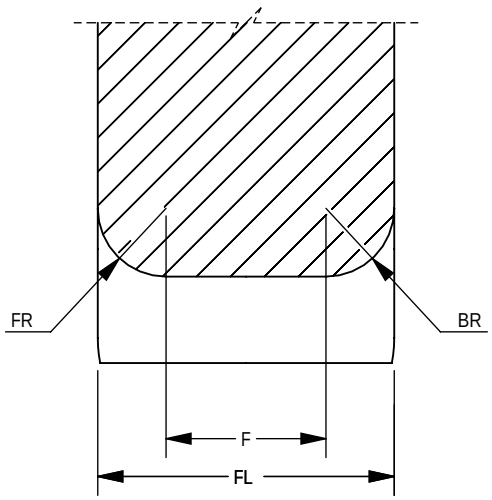

HOW TO ORDER
CKVD-400-G SPECIAL (2028926)
Plastic Box

DIMENSIONS:
FL = .0343 Ñ.0005 [0.871 Ñ0.0127]
F = .0185 [0.470] (REF)
W = .0315 Ñ.0005 [0.800 Ñ0.0127]
FR = .0079 [0.201] (REF)
BR = .0079 [0.201] (REF)
GD = .0100 Ñ.0004 [0.254 Ñ0.0102]
GR = .0032 [0.081] (REF)
B = .0173 Ñ.0007 [0.439 Ñ0.0178]
E = .0600 Ñ.0012 [1.524 Ñ0.0305]

PROPERTY OF
SMALL PRECISION TOOLS
DUPLICATION STRICTLY
PROHIBITED

UNLESS OTHERWISE SPECIFIED INCH [mm] .XX = Ñ .01 [0.25] .XXX = Ñ .005 [0.127] FRACTIONS = Ñ 1/64 [0.40] ANGLE = Ñ 1Á FINISH: ALL SURFACES 8 MAX	PRODUCTION DRAWN: AUTODRAW SERVICE DATE: 06-19-25	SPT small precision tools 1330 CLEGG STREET PETALUMA, CALIFORNIA 94954	
	SCALES: 3:1- front view 3:1- side view 3:1- top view 45:1- detail view 45:1- section view	TITLE: CKVD-400-G SPECIAL (2028926)	
3rd ANGLE PROJECTION		MATERIAL: CARBIDE	SIZE: DIN A4 / DRAWING NR.: 2028926-DW