Motoman XRC Controller

SV3X
Manipulator Manual

Part Number:	142657-1
Release Date:	May 1, 2000
Document Version:	2
Document Status:	Final

MOTOMAN
a YASKAWA company

Motoman, Incorporated
805 Liberty Lane
West Carrollton, OH 45449
TEL: (937) 847-6200
FAX: (937) 847-6277
24-Hour Service Hotline: (937) 847-3200

The information contained within this document is the proprietary property of Motoman, Inc., and may not be copied, reproduced or transmitted to other parties without the expressed written authorization of Motoman, Inc.

©2003 by MOTOMAN
All Rights Reserved

Because we are constantly improving our products, we reserve the right to change specifications without notice. MOTOMAN is a registered trademark of YASKAWA Electric Manufacturing.

TABLE OF CONTENTS

Section		Page
1	INTRODUCTION	1-1
2	SAFETY	2-1
3	XRC SETUP (R1)	3-1
4	SV3X INSTRUCTIONS	4-1
5	XRC INSTRUCTIONS – NORTH AMERICAN STANDARD (NAS)	5-1
6	XRC INSTRUCTIONS – GENERAL (R2)	6-1
7	SV3X ELEMENTARY DIAGRAMS	7-1

NOTES

SECTION 1
INTRODUCTION

The Motoman SV3X and XRC controller represent state-of-the-art technology in robotics today. The Motoman SV3X has six individual axes: Sweep, Lower arm, Upper arm, Rotate, Bend, and Twist.

The XRC controller coodinates the operation of the SV3X robot with external equipment such as power supply and positioning tables. The XRC processes input and output signals, maintains variable data, and performs numeric processing to convert to and from different coordinate systems. Furthermore, it provides main logic functions, servo control, program and constant data memory, and power distribution. Please read this manual thoroughly to familiarize yourself with the many aspects of the SV3X robot and XRC controller.

1.1 About this Document

This manual provides system information for SV3X robot and XRC controller and contains the following sections:

SECTION 1 –INTRODUCTION

Provides general information about the structure of this manual, a list of reference documents, and customer service information.

SECTION 2 –SAFETY

Provides information regarding the safe use and operation of the SV3X robot.

SECTION 3 –XRC SETUP

Provides basic information about the installation, connection, initial operation, and home calibration of your Motoman robot and XRC controller.

SECTION 4 –SV3X INSTRUCTIONS

Provides detailed information about the SV3X including installation, wiring, specifications, and maintenance.

SECTION 5 –XRC INSTRUCTIONS –NORTH AMERICAN STANDARD

Provides detailed information about the NAS XRC controller including descriptions, inspections, and parts replacement.

SECTION 6 –XRC INSTRUCTIONS –GENERAL

Provides general information about the XRC controller including system setup, inspections, diagnosis, and configuration, as well as specifications, maintenance, and alarm/error message lists.

SECTION 7 –SV3X ELEMENTARY DIAGRAMS

Provides detailed information about XRC wiring and system configuration with regard to the SV3X robot.

1.2 Reference to Other Documentation

For additional information refer to the following:

- Concurrent I/O Parameters Manual (P/N 142102-1)
- Operator's Manual for General Purpose (P/N 142099-1)
- Operator's Manual for Handling (P/N 142100-1)
- Operator's Manual for Spot Welding (P/N 142101-1)
- Operator's Manual for Arc Welding (P/N 142098-1)
- Vendor manuals for system components not manufactured by Motoman.

1.3 Customer Service Information

If you are in need of technical assistance, contact the Motoman service staff at (937) 847-3200. Please have the following information ready before you call:

- Robot Type (SV3X)
- Application Type (Arc Welding, Handling, etc.)
- Software Version (5.101A, etc.)
- Robot Serial Number (on the back side of the robot arm)
- Robot Sales Order Number (on front, lower right corner of the XRC controller and lower back of robot)

SECTION 2
SAFETY

2.1 Introduction

It is the purchaser's responsibility to ensure that all local, county, state, and national codes, regulations, rules, or laws relating to safety and safe operating conditions for each installation are met and followed.

We suggest that you obtain and review a copy of the ANSI/RIA National Safety Standard for Industrial Robots and Robot Systems. This information can be obtained from the Robotic Industries Association by requesting ANSI/RIA R15.06. The address is as follows:

Robotic Industries Association
900 Victors Way
P.O. Box 3724
Ann Arbor, Michigan 48106
TEL: (734) 994-6088
FAX: (734) 994-3338

Ultimately, the best safeguard is trained personnel. The user is responsible for providing personnel who are adequately trained to operate, program, and maintain the robot cell. **The robot must not be operated by personnel who have not been trained!**

We recommend that all personnel who intend to operate, program, repair, or use the robot system be trained in an approved Motoman training course and become familiar with the proper operation of the system.

This safety section addresses the following:

- Standard Conventions (Section 2.2)
- General Safeguarding Tips (Section 2.3)
- Mechanical Safety Devices (Section 2.4)
- Installation Safety (Section 2.5)
- Programming Safety (Section 2.6)
- Operation Safety (Section 2.7)
- Maintenance Safety (Section 2.8)

2.2 Standard Conventions

This manual includes information essential to the safety of personnel and equipment. As you read through this manual, be alert to the four signal words:

- DANGER
- WARNING
- CAUTION
- NOTE

Pay particular attention to the information provided under these headings which are defined below (in descending order of severity).

DANGER!

Information appearing under the DANGER caption concerns the protection of personnel from the immediate and imminent hazards that, if not avoided, will result in immediate, serious personal injury or loss of life in addition to equipment damage.

WARNING!

Information appearing under the WARNING caption concerns the protection of personnel and equipment from potential hazards that can result in personal injury or loss of life in addition to equipment damage.

CAUTION!

Information appearing under the CAUTION caption concerns the protection of personnel and equipment, software, and data from hazards that can result in minor personal injury or equipment damage.

NOTE: Information appearing in a NOTE caption provides additional information which is helpful in understanding the item being explained.

2.3 General Safeguarding Tips

All operators, programmers, plant and tooling engineers, maintenance personnel, supervisors, and anyone working near the robot must become familiar with the operation of this equipment. All personnel involved with the operation of the equipment must understand potential dangers of operation. General safeguarding tips are as follows:

- Improper operation can result in personal injury and/or damage to the equipment. Only trained personnel familiar with the operation of this robot, the operator's manuals, the system equipment, and options and accessories should be permitted to operate this robot system.
- Do not enter the robot cell while it is in automatic operation. Programmers must have the teach pendant when they enter the robot cell.
- Improper connections can damage the robot. All connections must be made within the standard voltage and current ratings of the robot I/O (Inputs and Outputs).
- The robot must be placed in Emergency Stop (E-STOP) mode whenever it is not in use.
- In accordance with ANSI/RIA R15.06, section 6.13.4 and 6.13.5, use lockout/tagout procedures during equipment maintenance. Refer also to Section 1910.147 (29CFR, Part 1910), Occupational Safety and Health Standards for General Industry (OSHA).

2.4 Mechanical Safety Devices

The safe operation of the robot, positioner, auxiliary equipment, and system is ultimately the user's responsibility. The conditions under which the equipment will be operated safely should be reviewed by the user. The user must be aware of the various national codes, ANSI/RIA R15.06 safety standards, and other local codes that may pertain to the installation and use of industrial equipment. Additional safety measures for personnel and equipment may be required depending on system installation, operation, and/or location. The following safety measures are available:

- Safety fences and barriers
- Light curtains
- Door interlocks
- Safety mats
- Floor markings
- Warning lights

Check all safety equipment frequently for proper operation. Repair or replace any non-functioning safety equipment immediately.

2.5 Installation Safety

Safe installation is essential for protection of people and equipment. The following suggestions are intended to supplement, but not replace, existing federal, local, and state laws and regulations. Additional safety measures for personnel and equipment may be required depending on system installation, operation, and/or location. Installation tips are as follows:

- Be sure that only qualified personnel familiar with national codes, local codes, and ANSI/RIA R15.06 safety standards are permitted to install the equipment.
- Identify the work envelope of each robot with floor markings, signs, and barriers.
- Position all controllers outside the robot work envelope.
- Whenever possible, install safety fences to protect against unauthorized entry into the work envelope.
- Eliminate areas where personnel might get trapped between a moving robot and other equipment (pinch points).
- Provide sufficient room inside the workcell to permit safe teaching and maintenance procedures.

2.6 Programming Safety

All operators, programmers, plant and tooling engineers, maintenance personnel, supervisors, and anyone working near the robot must become familiar with the operation of this equipment. All personnel involved with the operation of the equipment must understand potential dangers of operation. Programming tips are as follows:

- Any modifications to PART 1 of the controller PLC can cause severe personal injury or death, as well as damage to the robot! Do not make any modifications to PART 1. Making any changes without the written permission of Motoman will **VOID YOUR WARRANTY!**
- Some operations require standard passwords and some require special passwords. Special passwords are for Motoman use only. **YOUR WARRANTY WILL BE VOID** if you use these special passwords.
- Back up all programs and jobs onto a floppy disk whenever program changes are made. To avoid loss of information, programs, or jobs, a backup must always be made before any service procedures are done and before any changes are made to options, accessories, or equipment.
- The concurrent I/O (Input and Output) function allows the customer to modify the internal ladder inputs and outputs for maximum robot performance. Great care must be taken when making these modifications. Double-check all modifications under every mode of robot operation to ensure that you have not created hazards or dangerous situations that may damage the robot or other parts of the system.
- Improper operation can result in personal injury and/or damage to the equipment. Only trained personnel familiar with the operation, manuals, electrical design, and equipment interconnections of this robot should be permitted to operate the system.

- Inspect the robot and work envelope to be sure no potentially hazardous conditions exist. Be sure the area is clean and free of water, oil, debris, etc.
- Be sure that all safeguards are in place.
- Check the E-STOP button on the teach pendant for proper operation before programming.
- Carry the teach pendant with you when you enter the workcell.
- Be sure that only the person holding the teach pendant enters the workcell.
- Test any new or modified program at low speed for at least one full cycle.

2.7 Operation Safety

All operators, programmers, plant and tooling engineers, maintenance personnel, supervisors, and anyone working near the robot must become familiar with the operation of this equipment. All personnel involved with the operation of the equipment must understand potential dangers of operation. Operation tips are as follows:

- Be sure that only trained personnel familiar with the operation of this robot, the operator's manuals, the system equipment, and options and accessories are permitted to operate this robot system.
- Check all safety equipment for proper operation. Repair or replace any non-functioning safety equipment immediately.
- Inspect the robot and work envelope to ensure no potentially hazardous conditions exist. Be sure the area is clean and free of water, oil, debris, etc.
- Ensure that all safeguards are in place.
- Improper operation can result in personal injury and/or damage to the equipment. Only trained personnel familiar with the operation, manuals, electrical design, and equipment interconnections of this robot should be permitted to operate the system.
- Do not enter the robot cell while it is in automatic operation. Programmers must have the teach pendant when they enter the cell.
- The robot must be placed in Emergency Stop (E-STOP) mode whenever it is not in use.
- This equipment has multiple sources of electrical supply. Electrical interconnections are made between the controller, external servo box, and other equipment. Disconnect and lockout/tagout all electrical circuits before making any modifications or connections.
- All modifications made to the controller will change the way the robot operates and can cause severe personal injury or death, as well as damage the robot. This includes controller parameters, ladder parts 1 and 2, and I/O (Input and Output) modifications. Check and test all changes at slow speed.

2.8 Maintenance Safety

All operators, programmers, plant and tooling engineers, maintenance personnel, supervisors, and anyone working near the robot must become familiar with the operation of this equipment. All personnel involved with the operation of the equipment must understand potential dangers of operation. Maintenance tips are as follows:

- Do not perform any maintenance procedures before reading and understanding the proper procedures in the appropriate manual.
- Check all safety equipment for proper operation. Repair or replace any non-functioning safety equipment immediately.
- Improper operation can result in personal injury and/or damage to the equipment. Only trained personnel familiar with the operation, manuals, electrical design, and equipment interconnections of this robot should be permitted to operate the system.
- Back up all your programs and jobs onto a floppy disk whenever program changes are made. A backup must always be made before any servicing or changes are made to options, accessories, or equipment to avoid loss of information, programs, or jobs.
- Do not enter the robot cell while it is in automatic operation. Programmers must have the teach pendant when they enter the cell.
- The robot must be placed in Emergency Stop (E-STOP) mode whenever it is not in use.
- Be sure all safeguards are in place.
- Use proper replacement parts.
- This equipment has multiple sources of electrical supply. Electrical interconnections are made between the controller, external servo box, and other equipment. Disconnect and lockout/tagout all electrical circuits before making any modifications or connections.
- All modifications made to the controller will change the way the robot operates and can cause severe personal injury or death, as well as damage the robot. This includes controller parameters, ladder parts 1 and 2, and I/O (Input and Output) modifications. Check and test all changes at slow speed.
- Improper connections can damage the robot. All connections must be made within the standard voltage and current ratings of the robot I/O (Inputs and Outputs).

MOTOMAN
SETUP MANUAL

Upon receipt of the product and prior to initial operation, read these instructions thoroughly, and retain for future reference.

MOTOMAN INSTRUCTIONS

MOTOMAN SETUP MANUAL
MOTOMAN-ooo MANIPULATOR INSTRUCTION MANUAL
YASNAC XRC INSTRUCTION MANUAL
YASNAC XRC OPERATOR'S MANUAL
YASNAC XRC OPERATOR'S MANUAL FOR BEGINNERS

The YASNAC XRC operator's manuals above correspond to specific usage.
Please be sure to use the appropriate manual.

YASKAWA

MANUAL NO. RE-TA-A503 ①

MANDATORY

- This manual explains the various components of the YASNAC XRC system and general operations. Read this manual carefully and be sure to understand its contents before handling the YASNAC XRC.

- General items related to safety are listed in Section 1: Safety of the Setup Manual. To ensure correct and safe operation, carefully read the Setup Manual before reading this manual.

CAUTION

- Some drawings in this manual are shown with the protective covers or shields removed for clarity. Be sure all covers and shields are replaced before operating this product.

- The drawings and photos in this manual are representative examples and differences may exist between them and the delivered product.

- YASKAWA may modify this model without notice when necessary due to product improvements, modifications, or changes in specifications. If such modification is made, the manual number will also be revised.

- If your copy of the manual is damaged or lost, contact a YASKAWA representative to order a new copy. The representatives are listed on the back cover. Be sure to tell the representative the manual number listed on the front cover.

- YASKAWA is not responsible for incidents arising from unauthorized modification of its products. Unauthorized modification voids your product's warranty.

NOTES FOR SAFE OPERATION

Read this manual carefully before installation, operation, maintenance, or inspection of the YASNAC XRC.

In this manual, the Notes for Safe Operation are classified as “WARNING,” “CAUTION,” “MANDATORY,” or “PROHIBITED.”

WARNING	Indicates a potentially hazardous situation which, if not avoided, could result in death or serious injury to personnel.
CAUTION	Indicates a potentially hazardous situation which, if not avoided, could result in minor or moderate injury to personnel and damage to equipment. It may also be used to alert against unsafe practices.
MANDATORY	Always be sure to follow explicitly the items listed under this heading.
PROHIBTED	Must never be performed.

Even items described as “CAUTION” may result in a serious accident in some situations. At any rate, be sure to follow these important items.

NOTE

To ensure safe and efficient operation at all times, be sure to follow all instructions, even if not designated as “CAUTION” and “WARNING.”

WARNING

- Before operating the manipulator, check that the servo power is turned off when the emergency stop buttons on the playback panel or programming pendant are pressed.
  When the servo power is turned off, the SERVO ON READY lamp on the playback panel and the SERVO ON LED on the programming pendant are turned off.

  Injury or damage to machinery may result if the emergency stop circuit cannot stop the manipulator during an emergency. The manipulator should not be used if the emergency stop buttons do not function.

  Emergency Stop Button

- Once the emergency stop button is released, clear the cell of all items which could interfere with the operation of the manipulator. Then turn the servo power ON

  Injury may result from unintentional or unexpected manipulator motion.

  Release of Emergency Stop

- Always set the Teach Lock before entering the robot work envelope to teach a job.

  Operator injury can occur if the Teach Lock is not set and the manipulator is started from the playback panel.

- Observe the following precautions when performing teaching operations within the working envelope of the manipulator:
  - View the manipulator from the front whenever possible.
  - Always follow the predetermined operating procedure.
  - Ensure that you have a safe place to retreat in case of emergency.

  Improper or unintended manipulator operation may result in injury.

- Confirm that no persons are present in the manipulator's work envelope and that you are in a safe location before:
  - Turning on the YASNAC XRC power
  - Moving the manipulator with the programming pendant
  - Running check operations
  - Performing automatic operations

  Injury may result if anyone enters the working envelope of the manipulator during operation. Always press an emergency stop button immediately if there are problems. The emergency stop button is located on the right side of both the YASNAC XRC playback panel and programming pendant.

CAUTION

- Perform the following inspection procedures prior to conducting manipulator teaching. If problems are found, repair them immediately, and be sure that all other necessary processing has been performed.
  -Check for problems in manipulator movement.
  -Check for damage to insulation and sheathing of external wires.

- Always return the programming pendant to the hook on the XRC cabinet after use.

  The programming pendant can be damaged if it is left in the manipulator's work area, on the floor, or near fixtures.

- Read and understand the Explanation of the Alarm Display in the Setup Manual before operating the manipulator.

Definition of Terms Used Often in This Manual

The MOTOMAN manipulator is the YASKAWA industrial robot product.
The manipulator usually consists of the controller, the playback panel, the programming pendant, and supply cables.
In this manual, the equipment is designated as follows:

Equipment	Manual Designation
Manipulator	Manipulator
Power Cable	Power Cable
YASNAC XRC Controller	XRC
YASNAC XRC Playback Panel	Playback Panel
YASNAC XRC Programming Pendant	Programming Pendant

Descriptions of the programming pendant and playback panel keys, buttons, and displays are shown as follows:

Equipment		Manual Designation
Programming Pendant	Character Keys	The keys which have characters printed on them are denoted with [ ], e.g., [ENTER].
	Symbol Keys	The keys which have a symbol printed on them are not denoted with [ ] but depicted with a small picture. e.g., page key The cursor key is an exception, and a picture is not shown.
	Axis Keys Number Keys	“Axis Keys” and “Number Keys” are generic names for the keys for axis operation and number input.
	Keys pressed simultaneously	When two keys are to be pressed simultaneously, the keys are shown with a “+” sign between them, e.g., [SHIFT]+[COORD].
	Displays	The menu displayed in the programming pendant is denoted with { }, e.g., {JOB}.
Playback Panel	Buttons	Playback panel buttons are enclosed in brackets, e.g., [TEACH] on the playback panel.

Description of the Operation Procedure

In the explanation of the operation procedure, the expression "Select • • • " means that the cursor is moved to the object item and the SELECT key is pressed.

Explanation of warning labels

The following warning labels are attached to the manipulator and XRC.
Fully comply with the precautions on the warning labels.

WARNING

- The label described below is attached to the manipulator.

  Observe the precautions on the warning labels.
  Failure to observe this caution may result in injury or damage to equipment.

  Refer to the manipulator manual for the warning label location.

- The following warning labels are attached to XRC.

  Fully comply with the precautions on the warning labels.
  Failure to observe this warning may result in injury or damage to equipment.

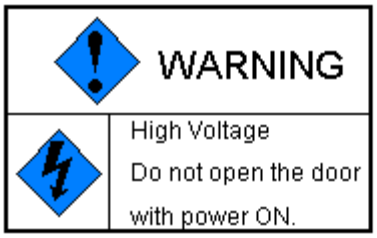

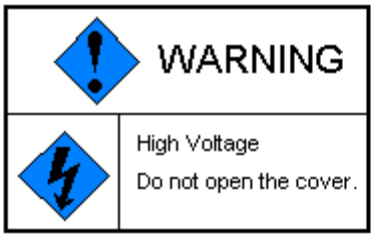

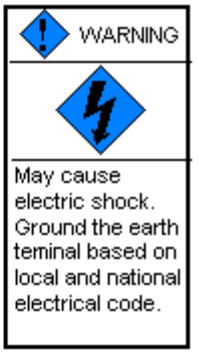

1 Safety

1.1 For Your Safety 1-1
1.2 Special Training 1-3
1.3 Motoman Manual List 1-3
1.4 Personnel Safety 1-4
1.5 Motoman Safety 1-6
1.5.1 Installation and Wiring Safety 1-6
1.5.2 Work Area Safety 1-10
1.5.3 Operation Safety 1-11
1.6 Notes for Moving and Transferring the MOTOMAN 1-14
1.7 Notes on MOTOMAN Disposal 1-15

2 Product Confirmation

2.1 Contents Confirmation 2-1
2.2 Order Number Confirmation 2-2

3 Installation

3.1 Handling Procedure 3-1
3.1.1 Using a Crane to Move the Controller 3-1
3.1.2 Using a Forklift to Move the Controller 3-2
3.2 Place of Installation 3-2
3.3 Location 3-3
3.4 Mounting the Controller 3-4

4 Connection

4.1 Notes on Cable Junctions 4-2
4.2 Power Supply 4-3
4.2.1 Three-Phase Power Supply 4-3
4.2.2 Noise Filter Installation 4-4
4.2.3 Leakage Breaker Installation 4-4
4.2.4 Primary Power Supply Switch Installation 4-5
4.3 Connection Methods 4-6
4.3.1 Connecting the Primary Power Supply 4-6
4.3.2 Connecting the Power Supply 4-9
4.3.3 Connecting the Programming Pendant 4-11

5 Turning on the Power Supply
5.1 Turning on the Main Power Supply 5-1
5.1.1 Startup Diagnostics 5-1
5.1.2 When Startup Diagnostics are Complete 5-2
5.2 Turning on the Servo Power 5-2
5.2.1 During Play Mode 5-2
5.2.2 During Teach Mode 5-3
5.3 Turning the Power Off 5-4
5.3.1 Turning the Servo Power Off (Emergency Stop) 5-4
5.3.2 Turning the Main Power Off 5-4

6 Test of Program Operation
6.1 Movement of the Axes 6-3

7 Home Position Confirmation
7.1 Home Position Confirmation 7-3
7.1.1 Operating Procedure 7-3

8 Final Notes

About Setup Manual Configuration

Thank you very much for purchasing Yaskawa Electric Mfg. Co., Ltd.'s manipulator .
This Setup Manual contains instructions for the safe use of the manipulator, and safe installation and wiring.
This manual is arranged as follows:

Chapter 1 includes general notes for safe and proper operation of the MOTOMAN.
Chapter 2 explains how to receive the manipulator and its support equipment.
Chapter 3 explains XRC installation, location, and setup.
Chapter 4 explains how to connect the primary power supply and power cables.
Chapter 5 explains how to turn the power supply on/off.
Chapter 6 explains the check operation and manipulator handling.
Chapter 7 explains home position registration and confirmation.
Chapter 8 lists all the manuals and their relevant uses.

1 Safety

1.1 For Your Safety

Robots generally have requirements which are different from other manufacturing equipment, such as larger working areas, high-speed operation, rapid arm movements, etc., which can pose safety hazards.
Read and understand the instruction manuals and related documents, and observe all pre-cautions in order to avoid the risk of injury to personnel and damage to equipment.
It is the user's responsibility to ensure that all local, state, and national codes, regulations rules, or laws relating to safety and safe operating conditions are met and followed.

MANDATORY

- Teaching maintenance of the robot must conform to:

  -Industrial Safety and Health Law
  -Enforcement Order of Industrial Safety and Health Law
  -Ordinance of Industrial Safety and Health Law

  Other related laws are:

  -Occupational Safety and Health Act in USA
  -Factory Act (Gewerbeordnung) in Germany
  -Health and Safety at Work, etc. Act in UK
  -EC Directive 89/392 Machinery and 91/368 EEC

- Prepare

  -SAFETY WORK REGULATIONS

  based on concrete policies for safety management complying with related laws.

- Observe the

  -MANIPULATING INDUSTRIAL ROBOTS-SAFETY (ISO 10218)

  for safe operation of the robot. (Japan Only) (JIS B 8433)

- Reinforce the

  -SAFETY MANAGEMENT SYSTEM

  by designating authorized workers and safety managers, as well as giving continuing safety education.

- Teaching and maintaining the robot are specified as "Hazardous Operations" in the Industrial Safety and Health Law

  (Japan only).
  Workers employed in these above operations are requested to attend special training offered by YASKAWA.

1.2 Special Training

MANDATORY

- Persons who teach or inspect the manipulator must undergo required training before using the manipulator.
- For more information on training, inquire at the nearest YASKAWA branch office.

  The telephone numbers are listed on the back cover of this manual.

1.3 Motoman Manual List

MANDATORY

- It is important to have and be familiar with all manuals concerning the MOTOMAN.

  You should have the four manuals listed below:

  -MOTOMAN SETUP MANUAL
  -MOTOMAN-ooo INSTRUCTIONS
  -YASNAC XRC INSTRUCTIONS
  -YASNAC XRC OPERATOR'S MANUAL FOR BEGINNERS
  -YASNAC XRC OPERATOR'S MANUAL

  Confirm that you have all these manuals on hand.
  If any manuals are missing, contact your salesman from YASKAWA's local branch office.
  The relevant telephone numbers are listed on the back cover.

1.4 Personnel Safety

The entire manipulator working envelope is potentially dangerous.
All personnel working with the MOTOMAN (safety administration, installation, operation, and maintenance personnel) must always be prepared and "Safety First" minded, to ensure the safety of all personnel.

CAUTION
• Avoid any dangerous actions in the area where the MOTOMAN is installed. There is a danger of injury if there is contact with the manipulator or peripheral equipment.
• Please take strict safety precautions by placing signs such as "Flammable," "High Voltage," "Waiting," and "Off-limits to Unauthorized Personnel" in necessary areas in the factory. Failure to observe these cautions may result in fire, electric shock, or injury due to contact with the manipulator and other equipment.
• Strictly observe the following items: -Always wear approved work clothes (no loose-fitting clothes). -Do not wear gloves when operating the MOTOMAN. -Do not allow underwear, shirts, or neckties to hang out from the work clothes. -Do not wear large jewelry, such as earrings, rings, or pendants. Always wear protective safety equipment such as helmets, safety shoes (with slip-proof soles),face shields, safety glasses, and gloves as necessary. Improper clothing may result in injury.
• Unauthorized persons should not approach the manipulator or associated peripheral equipment. Failure to observe this caution may result in injury due to contact with XRC, playback panel, the workpiece, the positioner, etc.

CAUTION

- Never forcibly move the manipulator axes.

  Failure to observe this caution may result in injury or equipment damage.

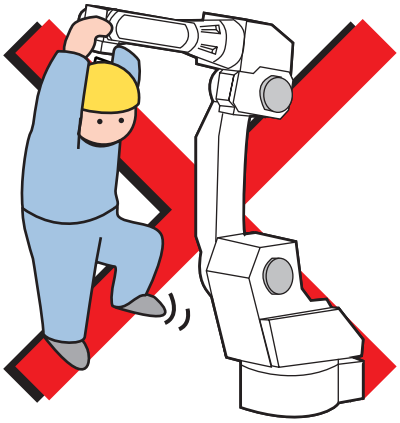

- Never lean on XRC or other controllers, and avoid inadvertently pushing buttons.

  Failure to observe this caution may result in injury or damage by unexpected movement of the manipulator.

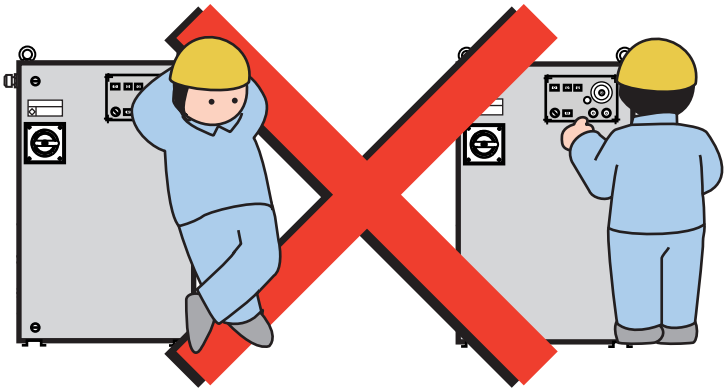

- Never allow unauthorized personnel to touch the XRC during operation.

  Failure to observe this caution may result in injury or damage resulting from unexpected movement of the manipulator.

1.5 Motoman Safety

1.5.1 Installation and Wiring Safety

Refer to the MOTOMAN-ooo Instructions manual and XRC Instructions for details on installation and wiring.
In planning installation, adapt an easy to observe arrangement to ensure safety. Take safety into consideration when planning the installation. Observe the following when installing the manipulator:

WARNING

- Select an area such as that described below to install the manipulator: Confirm that the area is large enough so that the fully extended manipulator arm with tool will not reach a side wall, safeguards, or the controller.

  Failure to observe this caution may result in injury or damage resulting from unexpected movement of the manipulator.

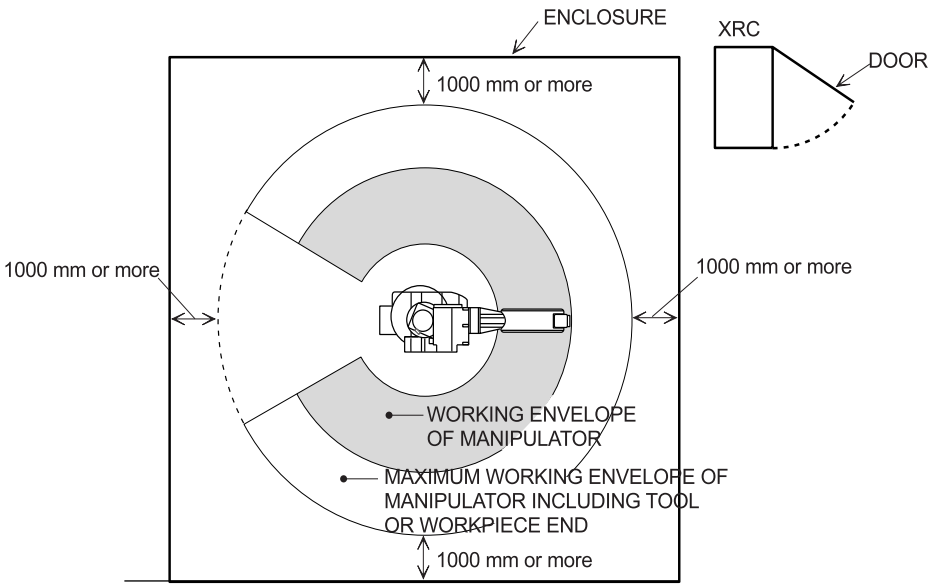

- Perform grounding in accordance with all applicable electrical codes.

  Failure to observe this caution may result in fire or electric shock.

CAUTION

- Operation of the crane, sling, or forklift should only be performed by authorized personnel.

  Failure to observe this precaution may result in injury or equipment damage.

MOTOMAN should be lifted with a crane using wire rope threaded through the shipping bolts and jigs and the body should be lifted in an upright posture as described in the manipulator instruction manual.

Failure to observe these precautions may cause the manipulator to turn downward, potentially causing injury or damage to equipment.

- When lifting the XRC, please check the following:

  -As a rule, handling of XRC must be performed using a crane with wire rope threaded through attached eyebolts.
  -Be sure to use wire that is strong enough to handle the weight of the XRC.

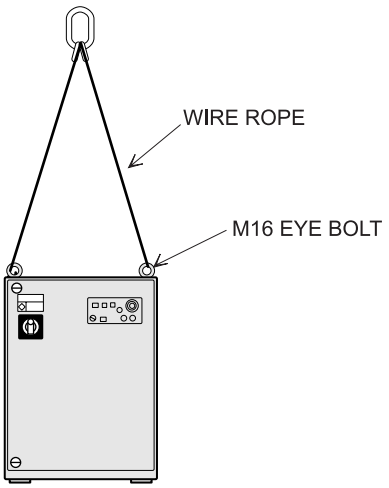

XRC

THE WEIGHT OF XRC (approx.)

XRC equivalent model	Approx. weight (kg)
SV3X,UP6,SK16X	70
SK45X,SK16MX	90
UP130,UP165, UP200,UP130R, SP100X	100

- Be sure the eyebolts are securely fastened.

  Failure to observe this caution may result in injury or damage to equipment.

- If storing the manipulator temporarily before installation, be sure to place it on a stable and flat surface and take precautions to prevent unauthorized personnel from touching it.

  Failure to observe this precaution may result in injury of damage to equipment.

CAUTION

- Be sure there is sufficient room for maintenance on the manipulator, XRC, and other peripheral equipment.

  Failure to observe this precaution could result in injury during maintenance.

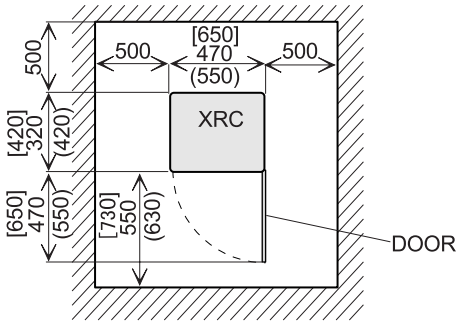

Securing (mm) SV3X,UP6,SK16X,
( )SK16MX,SK45X,
[ ]UP130,UP165,UP200,UP130R,SP100X

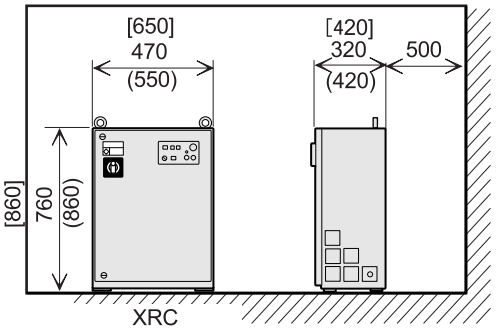

External Dimensions (mm) SV3X,UP6,SK16X
( )SK16MX,SK45X,
[ ]UP130,UP165,UP200,UP130R,SP100X

- The manipulator is controlled by the XRC or the welding fixture controller.

  To ensure safety, be sure to operate the controller from a location where the manipulator is easily visible.

  Operation by unauthorized personnel may result in injury or equipment damage.

- Install the XRC outside the safeguard of the manipulator's safety enclosure.

  Failure to observe this precaution may result in injury or damage to equipment resulting from contact with the manipulator.

- Install the manipulator using bolts of the size and type specified for each MOTOMAN in the MOTOMAN INSTRUCTION MANUAL.

  Failure to observe this caution may result in injury or damage to equipment.

CAUTION

- Secure the position of the XRC after setting up.

  Attach the XRC to the floor or rack, etc., using the screw holes on the bottom of the XRC.

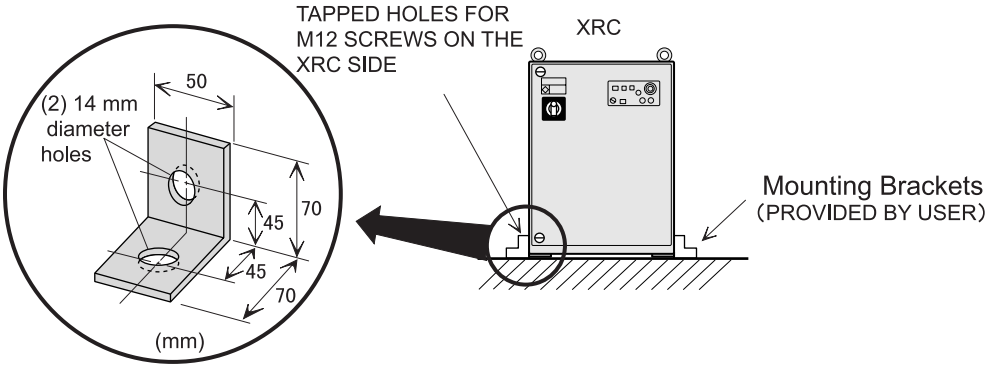

  Failure to observe this caution could lead to injury or equipment damage if the XRC should shift or fall.

- Be familiar with the connection diagram before wiring the XRC, and perform the wiring in accordance with the connection diagram.

  There is a danger of equipment damage or injury due to miswiring and unexpected movement of the equipment.

- Take precautions when wiring and piping between the XRC, manipulator, and peripheral equipment. Run the piping, wiring, or cables through a pit or use a protective cover, so that they are not stepped on by personnel or run over by the forklift.

  Operators and other personnel may stumble on exposed wiring or piping. Cable damage can cause unexpected manipulator motion resulting in injury or property damage.

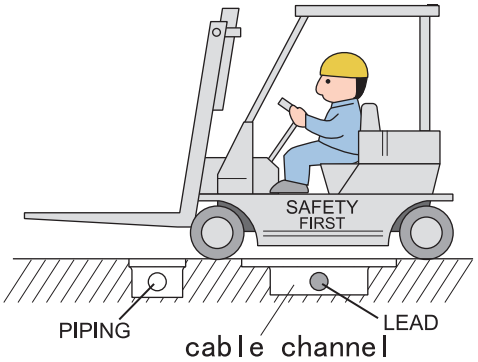

1.5.2 Work Area Safety

Carelessness contributes to serious accidents in the work area. To ensure safety, enforce the following precautions:

WARNING

- Install an enclosure around the manipulator to prevent any accidental contact with the manipulator while the power is on.
  Post a warning sign stating "Off-limits During Operation" at the entrance of the enclosure. The gate of the enclosure must be equipped with a safety interlock. Be sure the interlock operates correctly before use.

  Failure to observe this caution may result in a serious accident due to contact with the manipulator.

CAUTION

- Store tools and similar equipment in proper locations outside of the enclosure.

  Tools and loose equipment should not be left on the floor around the manipulator, XRC, or welding fixture, etc., as injury or damage to equipment can occur if the manipulator comes in contact with objects or equipment left in the work area.

1.5.3 Operation Safety

WARNING

- When attaching a tool such as the welding torch to the manipulator, be sure the power supply of the XRC and the tool is off, lock the switch, and display a warning sign.

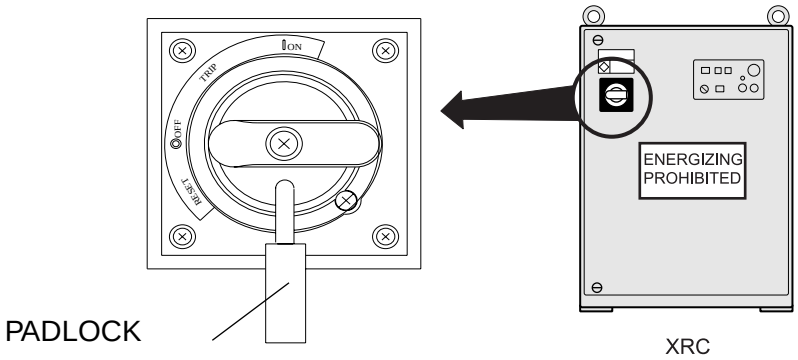

Turning the power on during tool installation may case electric shock or injury due to unexpected movement of the manipulator.

- Never exceed the rated capacity of the manipulator (capacity can be found in the specifications section of the manipulator manual.).

  Failure to observe this caution may result in injury or damage to equipment.

- Teach jobs from outside the manipulator's work area whenever possible.

- When teaching within the working envelope of the manipulator, please observe the following:

  - Always view the manipulator from the front.
  - Follow the predetermined operating procedure.
  - Always have an escape plan in mind in case the manipulator comes toward you unexpectedly.

  Failure to observe these precautions may result in injury due to unexpected manipulator motion.

WARNING

- Before operating the manipulator, confirm that the emergency stop circuit is functioning by pressing the emergency stop button on the playback panel and programming pendant, and confirm that the servo lamp is turned off.

  If the manipulator cannot be stopped in the event of an emergency, there is a risk of injury or damage to equipment.

- Always press Teach Lock before starting to teach.

  Failure to observe this precaution may result in injury due to unauthorized personnel operating the manipulator from the playback panel.

- Prior to operation, be sure there are no personnel in the manipulator's working envelope. The following operations should always be performed from a safe location.

  -Turning on the XRC power supply
  -Moving the manipulator using the programming pendant
  -The check operation
  -Automatic operation

  Failure to observe this caution may result in injury from contact with the manipulator.

  Press the emergency stop button immediately in the event any problems occur.
  The emergency stop button is on the upper right side of the playback panel on the controller and on the right side of the programming pendant.

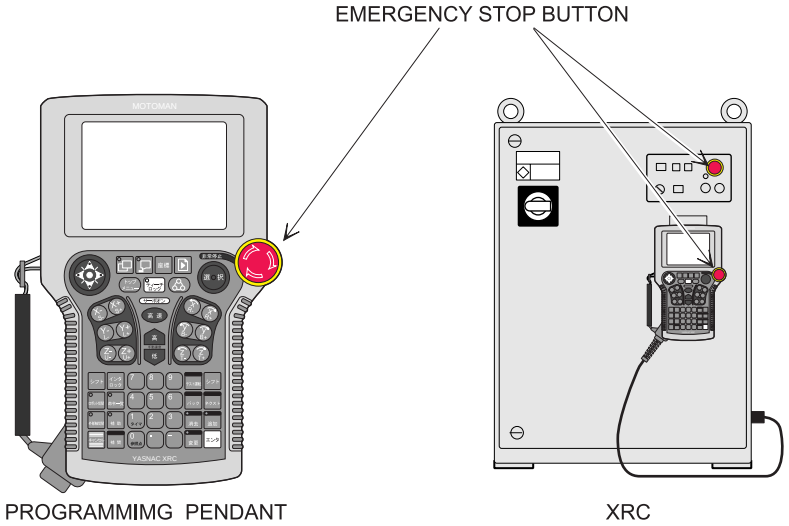

CAUTION

- Inspect all equipment before turning on power to the controller. Correct problems before operating.

  -Check for problems in manipulator motion
  -Check for damage to insulation and sheathing of cables.

- Always return the programming pendant to the hook on the front of the controller after use.

  The programming pendant can be damaged if it is left on the floor or in the manipulator work area.

MANDATORY

- Persons operating or inspecting the manipulator should be trained as required by applicable laws and company policies.

  (Refer to the 1.2 Special Training)

1.6 Notes for Moving and Transferring the MOTOMAN

When moving or transferring the Motoman, observe the following safety precautions:

CAUTION
• Attach the instructions to the controller cabinet so that all users have access to necessary manuals. See Section 1.3 for a complete list of manuals. If any manuals are missing, contact your Yaskawa representative.
• If the warning labels on the manipulator and YASNAC XRC are illegible, clean the labels so that they can be read clearly. Note that some local laws may prohibit equipment operation if safety labels are not in place. Contact your YASKAWA representative if you require new warning labels.
• When the MOTOMAN is transferred, it is recommended to check with Yaskawa Engineering Co. which is listed on back cover of this manual. Incorrect installation or wiring may result in personal injury and property damage.

PROHIBTED
• Never modify the manipulator or XRC. Failure to observe this precaution could result in injury or damage resulting from fire, power failure, or operation error.

1.7 Notes on MOTOMAN Disposal

CAUTION
• When disposing of the MOTOMAN, follow the applicable national/local laws and regulations.
• Anchor the manipulator well, even when temporarily storing it before disposal. Failure to observe this precaution may result in injury due to the manipulator falling down.

2 Product Confirmation

2.1 Contents Confirmation

Confirm the contents of the delivery when the product arrives.
Standard delivery includes the following five items (Information for the content of optional goods is given separately):

- Manipulator
- XRC
- Programming Pendant
- Power Cable (Between Manipulator and XRC)
- Complete Set of Manuals

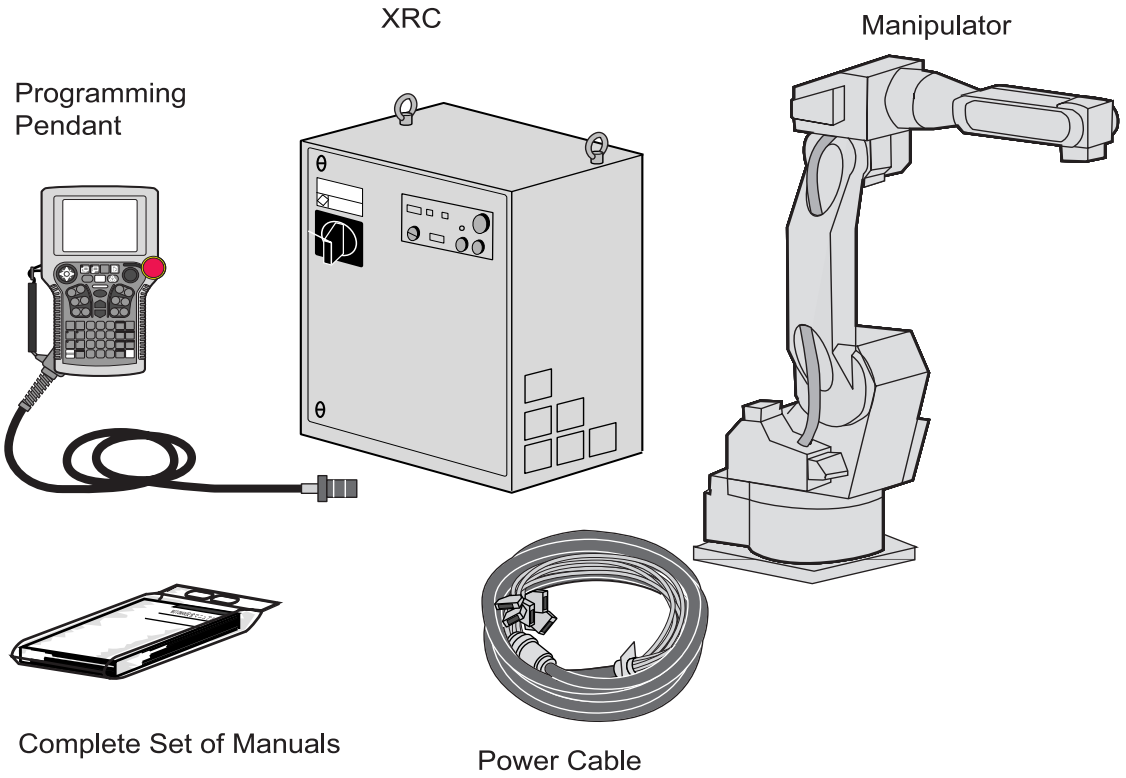

2.2 Order Number Confirmation

Confirm that the order number pasted on the manipulator and XRC match.
The order number plates are affixed to the figure below.

Example

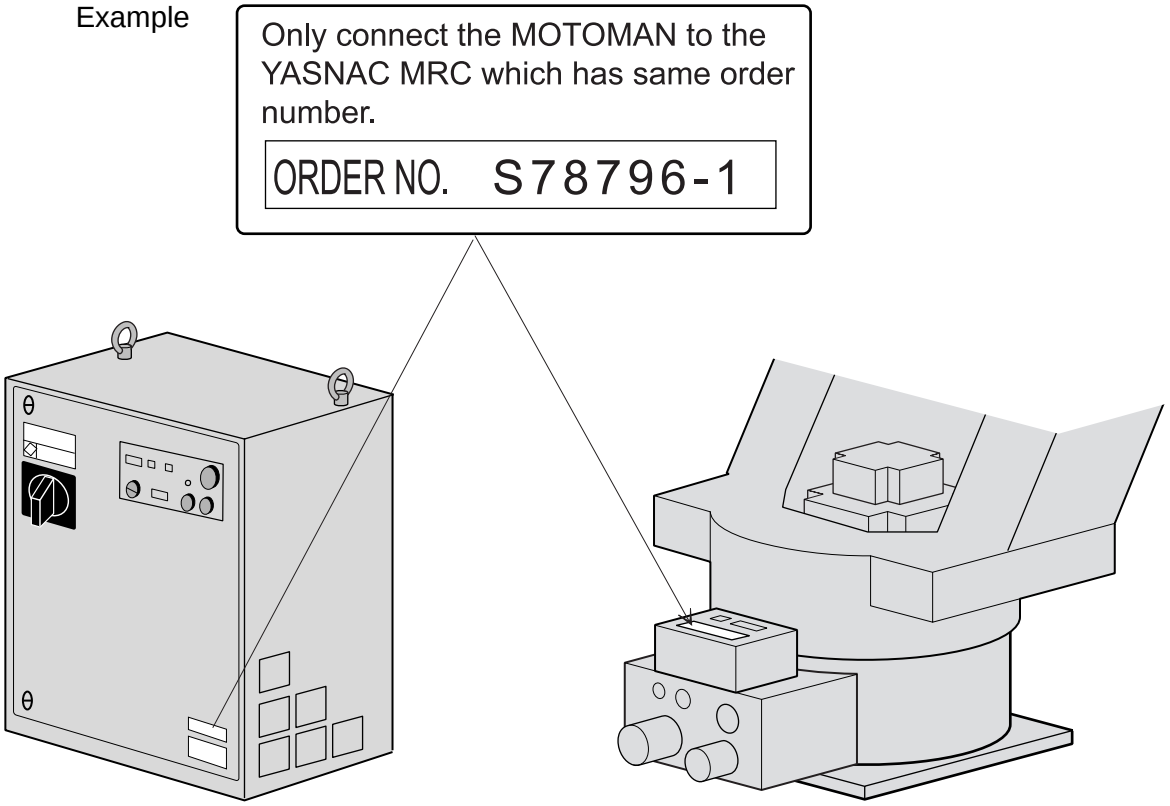

3 Installation

3.1 Handling Procedure

CAUTION

- Crane, sling, and forklift operations must be performed only by authorized personnel.

  Failure to observe this caution may result in injury or damage.

- Avoid jarring, dropping, or hitting the controller during handling.

  Excessive vibration or impacting the XRC may adversely affect the performance of the XRC.

3.1.1 Using a Crane to Move the Controller

Check the following before handling the XRC:

- Confirm the weight of the controller before handling, and use a wire rope with a rating that is greater than the weight of the controller.
- Install eyebolts for handling and make sure they are securely fastened before hoisting.

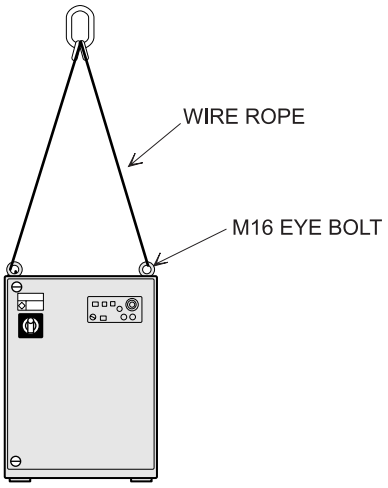

XRC

THE WEIGHT OF YASNAC XRC (approx.)

XRC equivalent model	Approx. weight (kg)
SV3X,UP6, SK16X	70
SK16MX,SK45X	90
UP130,UP165, UP200,UP130R, SP100X	100

3.1.2 Using a Forklift to Move the Controller

Observe the following precautions when using a forklift to handle the controller:

- Confirm that there is a safe work environment and that the XRC can be transported safely to the installation site.
- Inform people along the forklift route that equipment is being moved in their area.
- Secure the controller so it cannot shift or fall during handling.
- Transport the controller at the lowest possible height.
- Avoid jarring, dropping, or hitting the controller during handling.

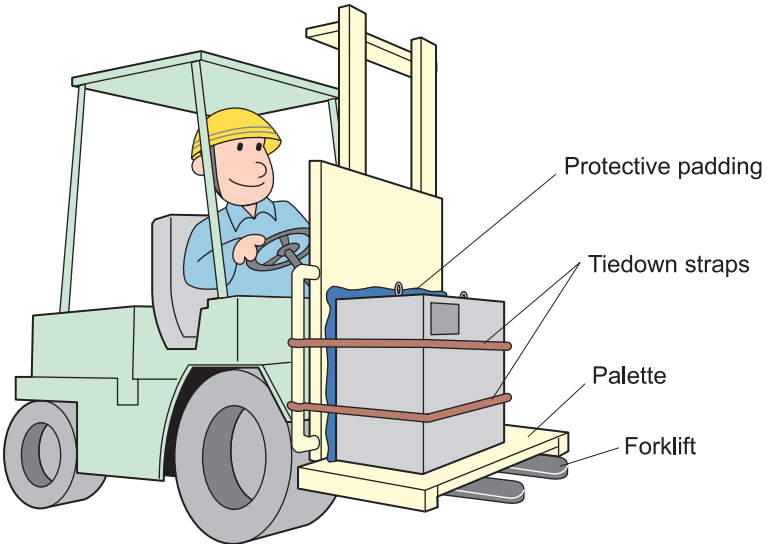

3.2 Place of Installation

The conditions listed below must be met before installing the XRC:

- Ambient temperature must be 0 to 45° C (32 to 113°F) during operation and -10 to 60°C (14 to 140°F) during transportation and maintenance.
- Humidity must be low with no condensation (under 20%RH).
- It must be a place with little dirt, dust, or water.
- No flammable or corrosive liquids or gases, etc. in the area.
- Little jarring or potential for striking of the XRC (under 0.5 oscillation).
- No large electric noise source (such as a TIG welding device, etc.) nearby.
- No potential for collision with moving equipment such as forklifts.

3.3 Location

- Install the XRC outside of the working envelope of the manipulator (outside of the enclosure)

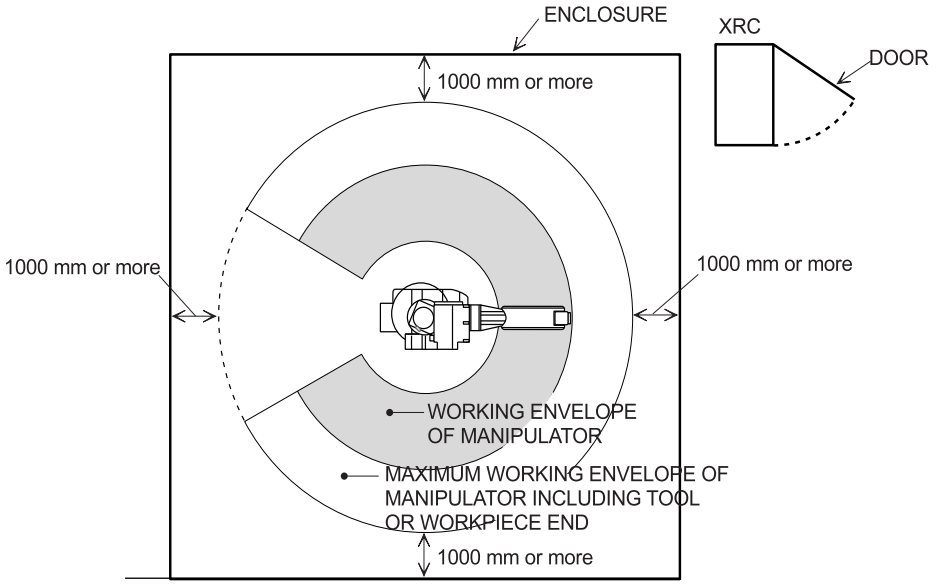

- Install the controller in a location from which the manipulator is easily visible.
- Install the controller in a location from which you can easily inspect it when the door is open.

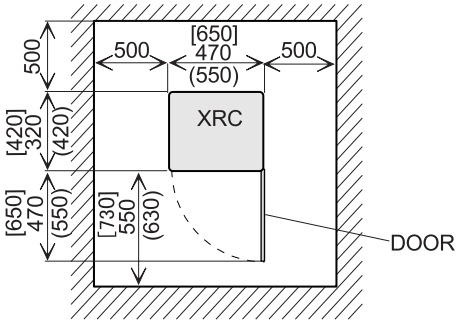

- Install the controller at least 500mm from the nearest wall to allow maintenance access. Shows the external dimensions.

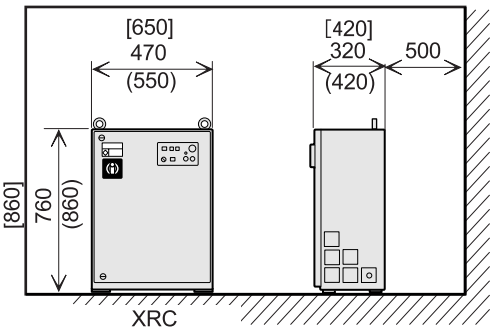

3.4 Mounting the Controller

Attach the controller to the floor using user-supplied brackets made according to the specifications shown below.

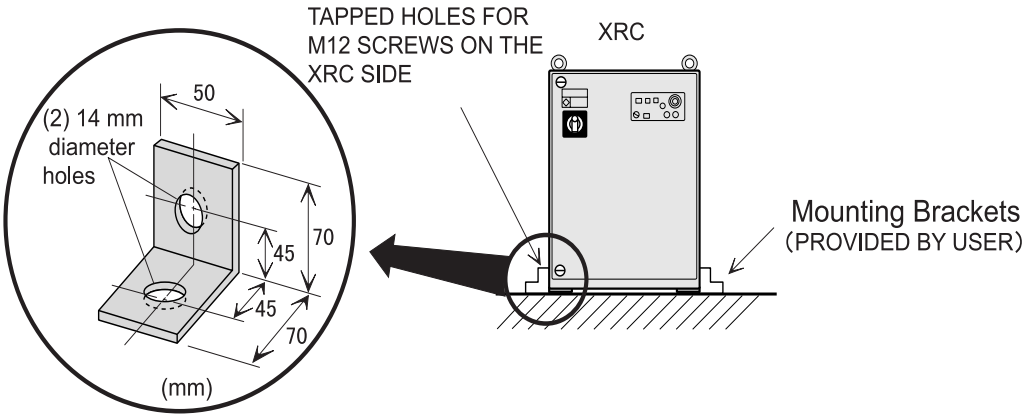

Attaching the XRC (mm)

External Dimensions (mm)

NOTE Refer to the Instruction Manual for information on installation of the manipulator.

4 Connection

WARNING

- The system must be grounded.

  Failure to ground equipment may result in injury from fire or electric shock.

- Before grounding the system, turn off the power supply and lock the main power switch.

  Failure to observe this caution may result in injury and electric shock.

- Do not touch any board inside the controller for five minutes after turning off the power supply.

  Capacitors inside the controller store electricity after power is turned off. Exercise caution whenever handling circuit boards. Failure to observe this caution may cause electrical shock.

- Power cannot be turned on unless the door is closed. Interlocks prevent power from being turned on.

  Failure to observe this caution may result in fire and electric shock.

- Any occurrence during wiring while the XRC is in the emergency stop mode is the user's responsibility. Do an operation check once the wiring is completed.

  Failure to observe this caution could lead to injury or mechanical failure.

CAUTION

- Wiring must be performed only by authorized personnel.

  Incorrect wiring may cause fire and electric shock.

- Perform wiring in accordance with the rated capacity as specified in the Instructions.

  Incorrect wiring may cause fire or mechanical breakdown.

- Be sure the power circuit screws are securely tightened.

  Loose power circuit wires can cause fire and electric shock.

- Do not handle the circuit board directly by hand.

  The IC board may malfunction due to static electricity.

4.1 Notes on Cable Junctions

- The cables that connect the controller to peripheral equipment are low voltage circuits. Keep controller signal cables away from the primary power circuit. High voltage power lines should not be run in parallel to controller signal cables. If running parallel cables is unavoidable, use metal ducts or conduit to isolate electrical signal interference. If cables must be crossed, run the power cables perpendicular across the signal cables.
- Confirm the connector and cable numbers to prevent misconnection and equipment damage. One connects the manipulator and XRC. Another connects the XRC and peripheral equipment. A wrong connection can cause damage to electronic equipment.
- Clear the area of all unauthorized personnel while making cable connections. Place all cables in a covered cable channel in the floor.

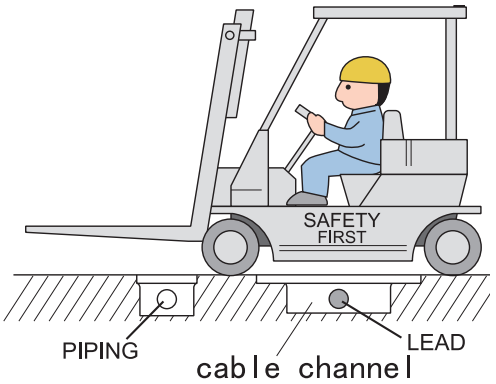

XRC Cable Junction Diagram

4.2 Power Supply

4.2.1 Three-Phase Power Supply

The three-phase power supply consists of AC200/220V(+10/-15%) and 50/60Hz(+2Hz/-2Hz). The power failure processing circuit operates when there is a temporary power frequency black out or drop in voltage, and the servo power turns off.
Connect the power supply to a stable power source that is not prone to power fluctuations.

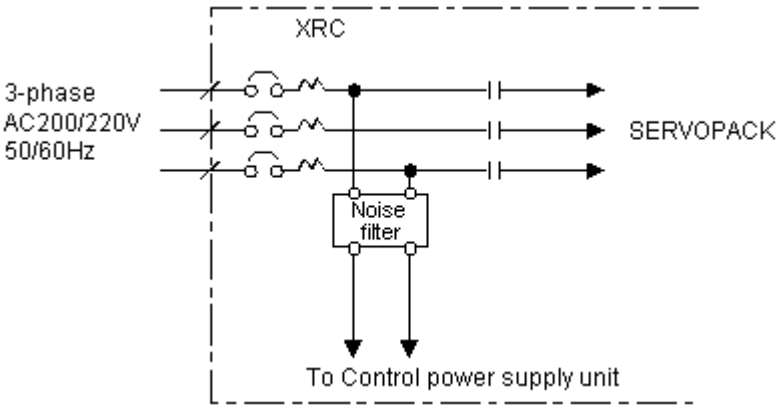

Input Power Source Connection

4.2.2 Noise Filter Installation

Insert the three-phase noise filter if you hear noise coming from the power source.
Seal up each cable opening so that dust does not enter.

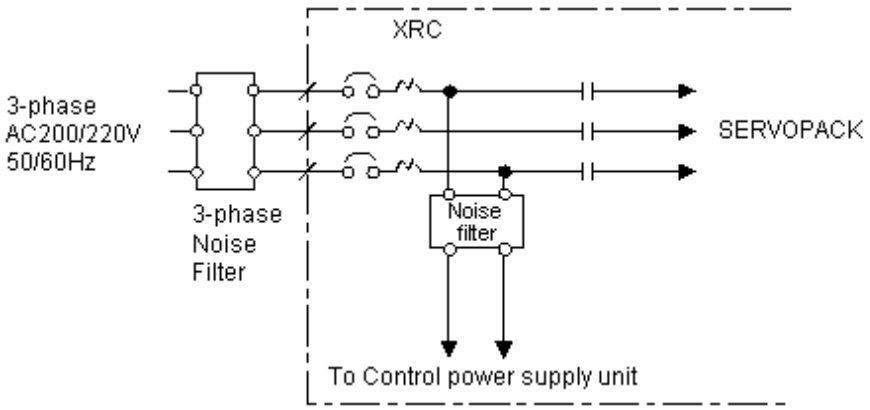

Connection of Three-Phase Noise Filter

4.2.3 Leakage Breaker Installation

When connecting the leakage breaker to the controller power supply wiring, use a leakage breaker which can handle high frequencies. Leakage breakers which cannot handle high frequencies may malfunction.

Example of High Frequency Leakage Breakers

Maker	Model
Mitsubishi Electric Co., Ltd.	NV series (manufactured since 1988)
Fuji Electric Co., Ltd.	EG or SG Series (manufactured since 1984)

Even with a leakage breaker installed, there is still a possibility of some high frequency current leakage (small capacity 60-80 mA or large capacity 80-200 mA) from the XRC inverter. This current leakage presents no safety risks.

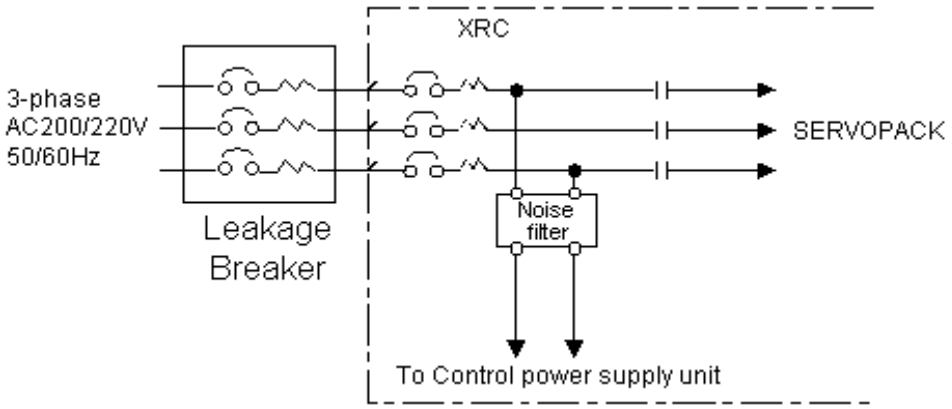

Connection of the Leakage Breaker

4.2.4 Primary Power Supply Switch Installation

Install the primary power supply switch as shown.

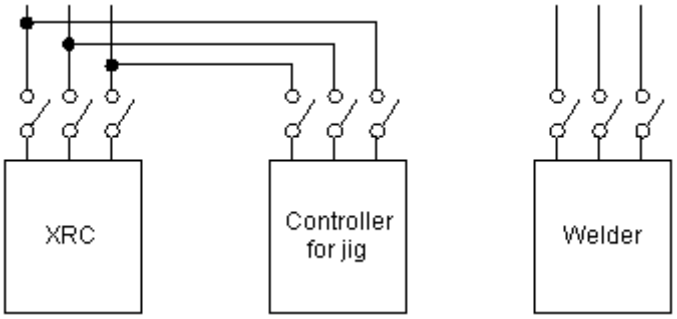

Installation of the Primary Power Supply Switch

Cable Sizes and Switch Capacities

Manipulator	Voltage source capacity (kVA)	Cable size (size of terminal) (In case of Cabtyre cable (four wicks)) mm^2	Switch capacity (A)
SV3X	1	2.0 (M5)	10
UP6	2	3.5 (M5)	15
SK16X	2	3.5 (M5)	15
SK16MX, SK45X	5	5.5 (M5)	30
UP130,UP165, UP200	7.5	5.5(M5)	40
UP130R	10	5.5(M5)	40
SP100X	11	5.5(M5)	40

The maximum load value (payload, operation speed, and frequency, etc.) is displayed.
However, the voltage source capacity is different depending on work conditions.
Inquire at the nearest branch office listed on the back cover for information when selecting the transformer.

4.3 Connection Methods

A connection diagram for the manipulator, controller power cable, primary power cable and programming pendant is shown below.

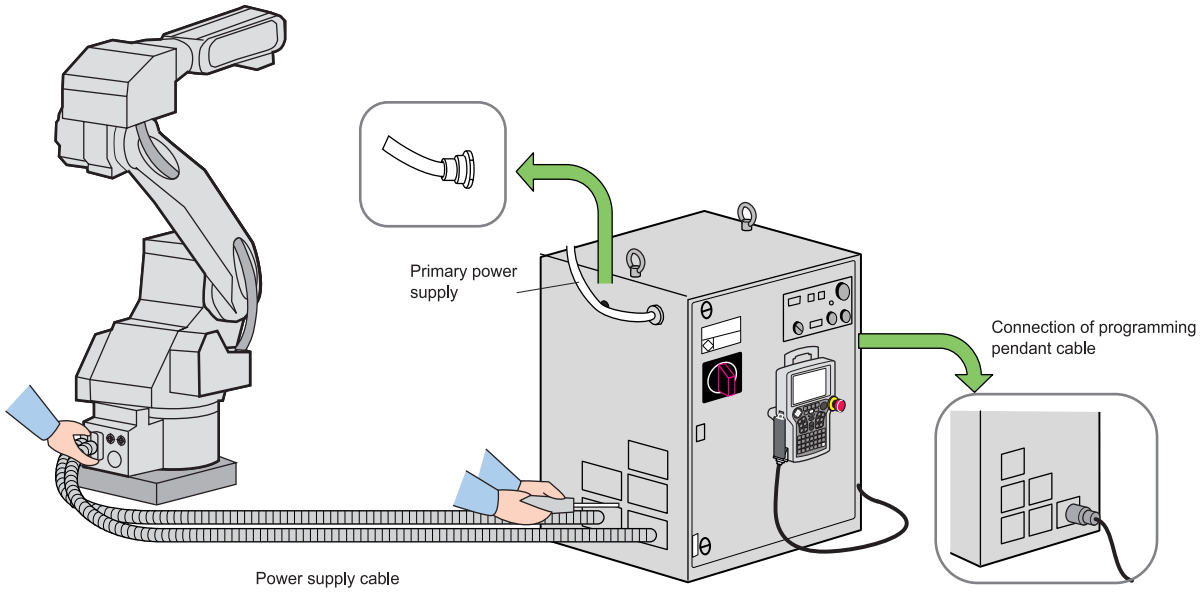

4.3.1 Connecting the Primary Power Supply

1. Open the front door of the XRC.
   (1) Insert the door handle in the door lock on the front of XRC (two places), and rotate it 90 degrees clockwise.

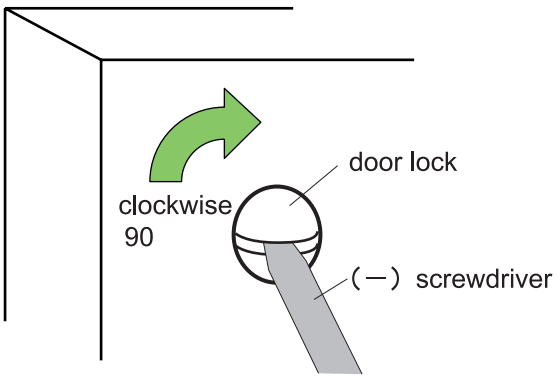

Rotating the Door Handle Clockwise.

   (2) Rotate the main switch to the "OPEN RESET" position and open the door gently.

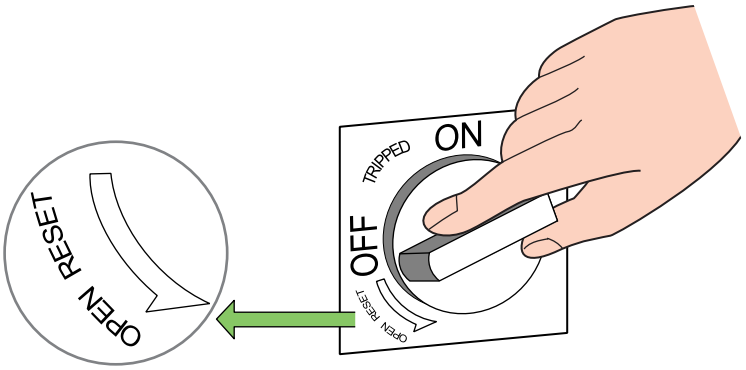

Rotating the main switch to the OPEN RESET position.

2. Confirm that the main power supply is OFF.
3. Make a hole in the plate and run the primary power supply cable through it. It is located on the top or on the left side of the XRC.
   Attach the plate and cable firmly so that it won't shift or slide out of place.

(1) Pull off the top cover of the switch which is on the upper left side of the XRC.

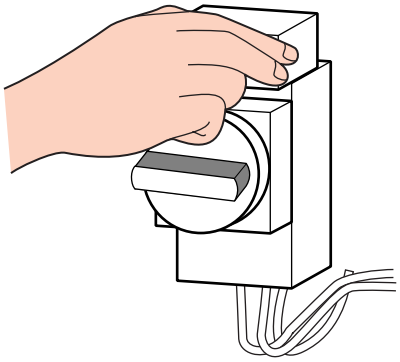

Pulling Off the Cover

(2) Connect the primary power supply cable.

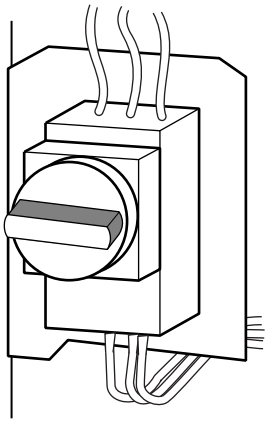

Connection to the Terminal

(3) Connect a ground wire to reduce noise and prevent current leakage.

1) Connect the ground wire to the ground terminal (screw) of the switch which is on the upper left side of XRC.

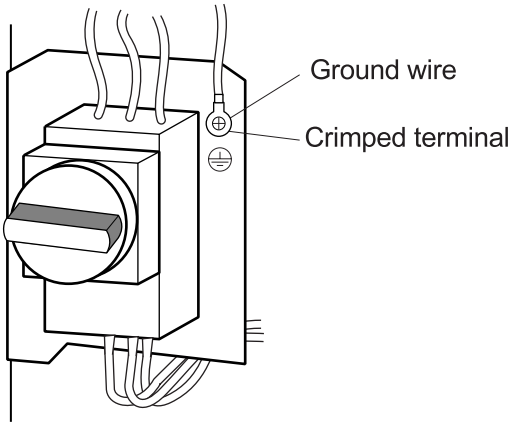

Connection of the Ground Wire

2) Perform grounding in accordance with all relevant local and national electrical codes. Grounding wire must be 8.0 mm2 or larger.

NOTE The customer must prepare the ground wire.

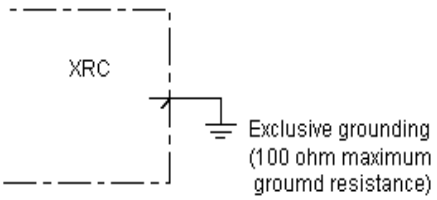

Exclusive Grounding

NOTE
- Don't connect the grounding wire with the wires for the electric power source, the welder, etc.
- Ground in accordance with all relevant governmental regulations when using metallic ducts, metallic conduits, and wiring hedges to construct the cable.

(4) Install the cover.

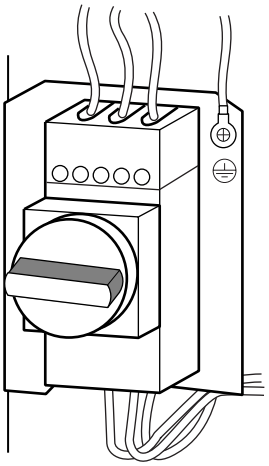

Install the Switch Cover

4.3.2 Connecting the Power Supply

1. Remove the cover from the left side of the controller cabinet.

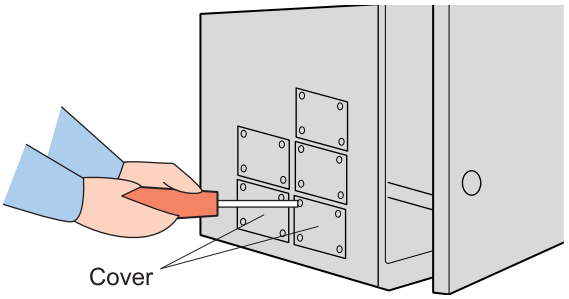

Detaching the Cable Hole Cover

2. Remove the package, and take out the cable. Once you have run the cables through the cable holes on each side of XRC, tighten the screws.

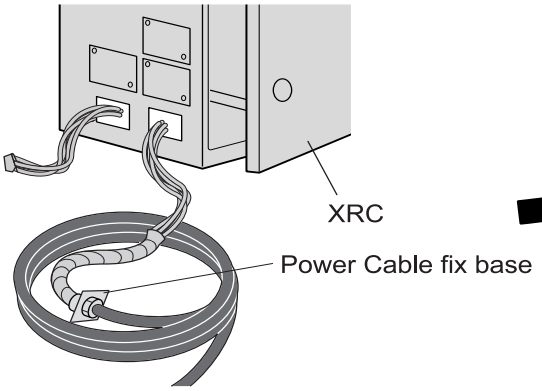

Cables Passed Through the Holes in the Side of the XRC

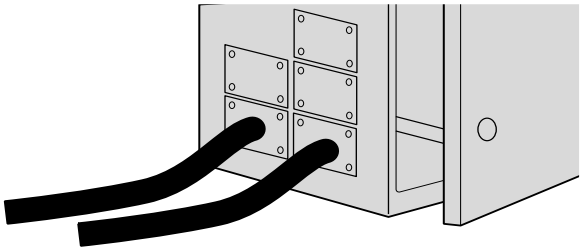

Tightening the Screws for the Cable

> **NOTE** For more information on connecting the power cables, please refer to the Instruction Manual which corresponds to the particular XRC model.

3. Connect the manipulator to the XRC.
   Check the shape and size of the cable connector, the key fitting, and the position of the pins of the manipulator. Push the cable connector into the manipulator side connector firmly, and tighten securely.
4. Close the XRC door.
   (1) Close the door gently.
   (2) Rotate the door handle counterclockwise 90 degrees.

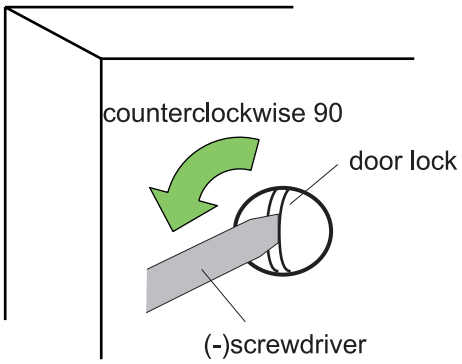

4.3.3 Connecting the Programming Pendant

Connect the programming pendant cable to the connector on the left side of the controller cabinet.

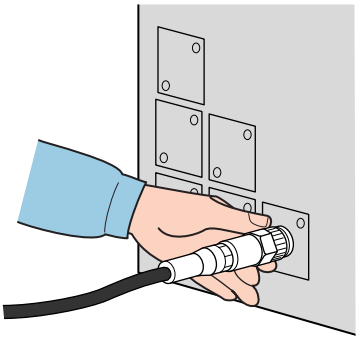

Connecting the Programming Pendant

The manipulator, XRC, and the programming pendant connections are now complete.

5 Turning on the Power Supply

WARNING

- Confirm that nobody is present in the working envelope of the manipulator when turning on XRC power supply.

  Failure to observe this caution could result in injury caused by accidental contact with the manipulator.

  Push the emergency stop button immediately if any problems occur.
  The emergency stop button is located on the upper right side of XRC playback panel and on the right side of the programming pendant.

5.1 Turning on the Main Power Supply

The main power supply is turned on when the main power supply switch on the front of the XRC is turned to the "ON" position, and the initial diagnosis and the current position begin.

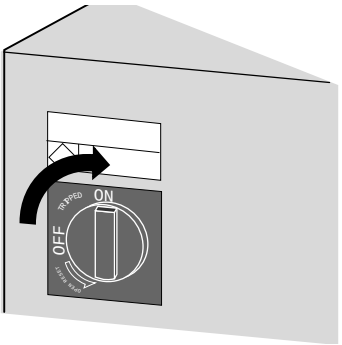

5.1.1 Startup Diagnostics

The startup diagnostics are performed when the XRC main power is turned on, and the startup display is shown on the programming pendant screen.

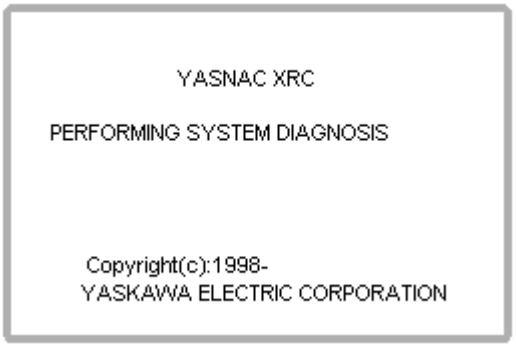

5.1.2 When Startup Diagnostics are Complete

When the power is turned off, the XRC saves all condition data, including:

- Mode of operation
- Cycle
- Called job (active job if the XRC is in the play mode; edit job if the XRC is in the teach mode) and the cursor position in the job.

5.2 Turning on the Servo Power

5.2.1 During Play Mode

The worker's safety is secure if the safety plug is turned on.

1. When the safety guard is closed, press [SERVO ON READY] on the playback panel to turn on the servo power supply. This button lights.

NOTE When the safety guard is open, the servo power supply cannot be turned on.

5.2.2 During Teach Mode

1. Press [SERVO ON READY] on the playback panel to turn on the servo power supply. The button will light when the servo power is turned on.

2. Press [TEACH LOCK] to enter the teach mode.

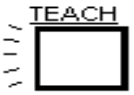

3. The servo power is turned on and [SERVO ON READY] on the playback panel lights when the operator grips the deadman switch.

SUPPLE-MENT

Servo Power ON/OFF --- Deadman Switch

When the operator squeezes the deadman switch, the servo power turns ON. However, if the operator squeezes the switch until a “click” is heard, the servo power will turn OFF.

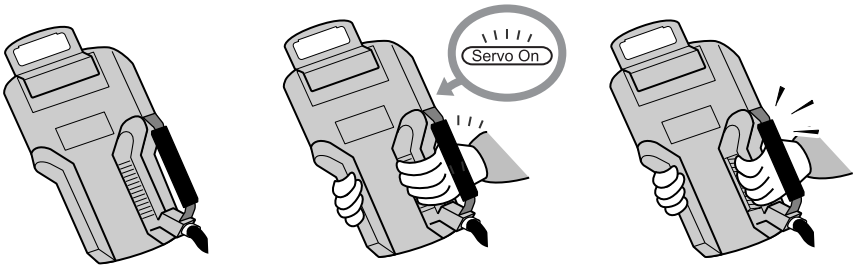

Release -> OFF Squeeze -> ON Squeeze Tightly -> OFF

NOTE

When using the playback panel, programming pendant, or external signal to perform emergency stop, the servo power on operation from the deadman switch is cancelled. When turning the power back on, follow the previously listed instructions.

5.3 Turning the Power Off

5.3.1 Turning the Servo Power Off (Emergency Stop)

The manipulator cannot be operated when the emergency stop button is pressed and the servo power supply is turned off.

Turning the Servo Power Off

- Pressing the emergency stop button on either the programming pendant or the playback box will turn off servo power.
- The brake operates once the servo power supply is turned off, and the manipulator can no longer operate.
- The emergency stop mode can be operated at any time.

Programming Pendant

Playback Panel

5.3.2 Turning the Main Power Off

After turning off the servo power, turn off the main power.

When the main power switch on the front of XRC is turned off, the main power is cut off.

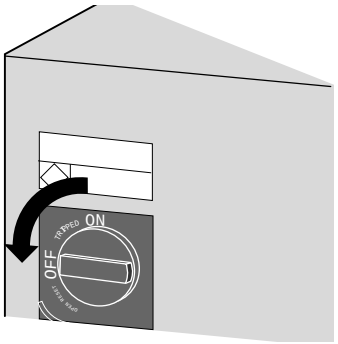

6 Test of Program Operation

WARNING

- Press the emergency stop button on the playback panel and the programming pendant before operating the manipulator. Confirm that the servo on lamp is turned off.

  Injury or damage to machinery may result if the manipulator cannot be stopped in case of an emergency.

- Set the teach lock before starting to teach.

  Injury can occur if unauthorized personnel operate the playback panel during operation.

- Observe the following when teaching in the working envelope:

  -View the manipulator from the front at all times.
  -Follow the predetermined operating procedure.
  -Always have an escape plan in mind in case the manipulator comes toward you unexpectedly.

  Improper or unintentional manipulator movement can result in injury.

- Ensure no persons are present in the manipulator work area before:

  -Turning on the power supply to XRC
  -Moving the manipulator using the programming pendant
  -Doing a check operation
  -Performing automatic operation

  Persons who enter the manipulator's work area while the manipulator is in operation may be injured if they come in contact with the manipulator.

  Push the emergency stop button immediately if any problems occur.
  The emergency stop button is located on the upper right of the playback panel of the XRC and on the right side of the programming pendant.

CAUTION

- Inspect the system before teaching jobs. If problems are found, correct them before resuming operation. Specifically check for:

  -Problems in manipulator motion
  -Damage to cables

- Always return the programming pendant to its specified position after use.

  The programming pendant can be damaged if it is left in the manipulator work area or on the floor.

6.1 Movement of the Axes

Move each axis of the manipulator by pressing the axis keys on the programming pendant. This figure illustrates each axis of motion in the joint coordinate system.

> **NOTE** Be sure to remove all items from the area before moving the manipulator.
> Refer to the Instruction Manual for the appropriate position of the fixture.

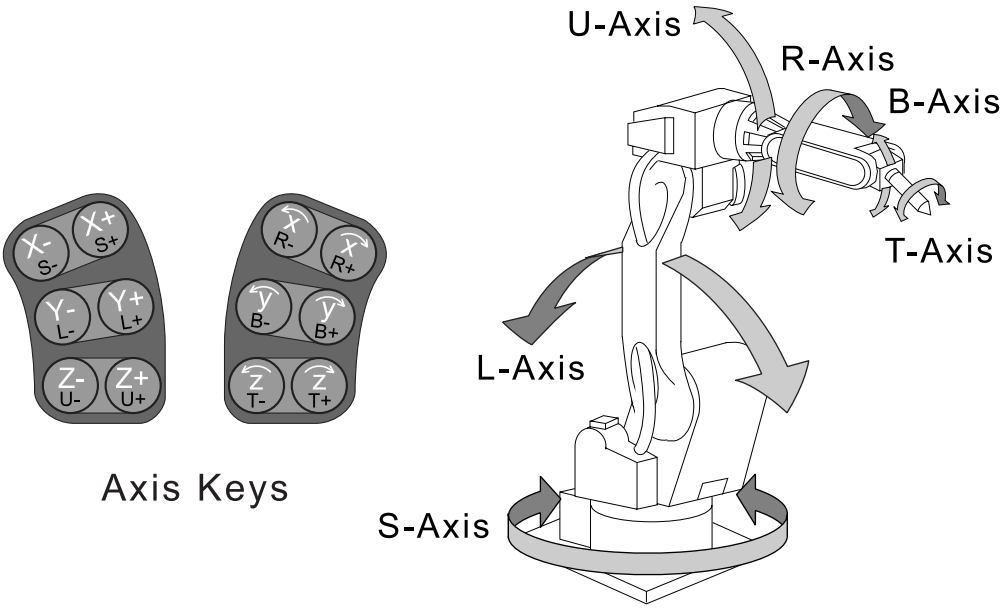

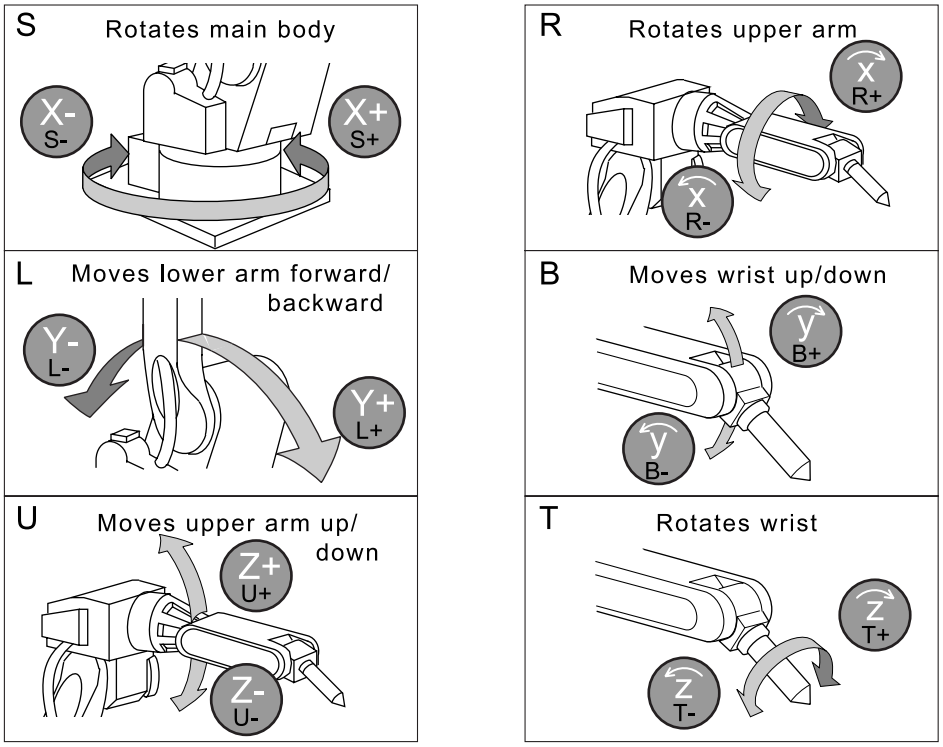

7 Home Position Confirmation

WARNING

- Press each emergency stop button on the playback panel and the programming pendant before operating the manipulator. Be sure the servo on lamp is turned off.

  There is a danger of injury and equipment damage if the manipulator cannot be stopped in the event of an emergency.

- Set the teach lock before starting to teach.

  There is a danger of injury when unauthorized personnel operate the playback panel during operation.

- Strictly observe the following when teaching in the working envelope:

  -View the manipulator from the front at all times.
  -Follow the predetermined operating procedure.
  -Always have an escape plan in mind in case the manipulator comes toward you unexpectedly.
  -Ensure that you have a safe place to retreat in the event of an emergency.

  Improper or unintentional manipulator operation can result in injury.

- Prior to performing the following operations, be sure that there is no one within the working envelope of the manipulator, and be sure that you are in a safe area from which to operate:

  - When turning on the power supply to the XRC
  -When moving the manipulator using the programming pendant
  -When doing a check operation
  -When performing automatic operation

  Injury may result from contact with the manipulator if anyone carelessly enters the working envelope of the manipulator.

  Push the emergency stop button at once if any problems occur.
  The emergency stop button is located on the upper right of the playback panel of the XRC and on the right side of the programming pendant.

CAUTION

- Perform the following inspection procedures before starting to teach. If problems are found, repair them immediately and be sure all necessary processing has been performed:

  -Check for problems in manipulator movement.
  -Check for damage to insulation and sheathing of external wires.

- Return the programming pendant to its specified position after use.

  If the programming pendant is left carelessly on the floor, manipulator, or positioner etc. the manipulator or a tool could collide with it during manipulator movement, possibly causing injury and equipment damage.

7.1 Home Position Confirmation

It is necessary to register the home position (each axis has a position of 0 pulse) correctly so that the manipulator will work accurately.
The home position for the UP6 is shown.

NOTE Other manipulator models have different positions. Always consult the documentation for the correct manipulator model.

7.1.1 Operating Procedure

Operation

Select{ROBOT} ➡ Select {CURRENT POSITION}*1

Explanation

*1 The position display is shown.

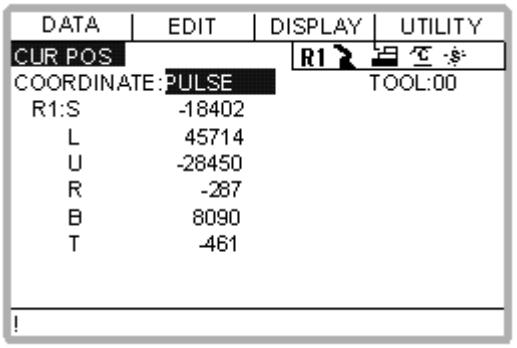

Operation

Press the AXIS KEY ➡ Press {E. STOP]*2

Explanation

*1 Move each manipulator axis using the programming pendant axis key. Adjust each axis to the position of 0 pulse. Make sure the manipulator servo power supply is off and that the axis home position calibration is accurate.

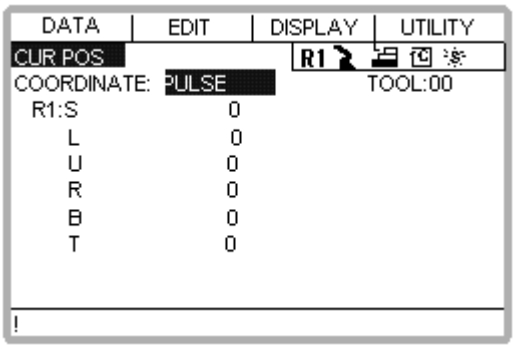

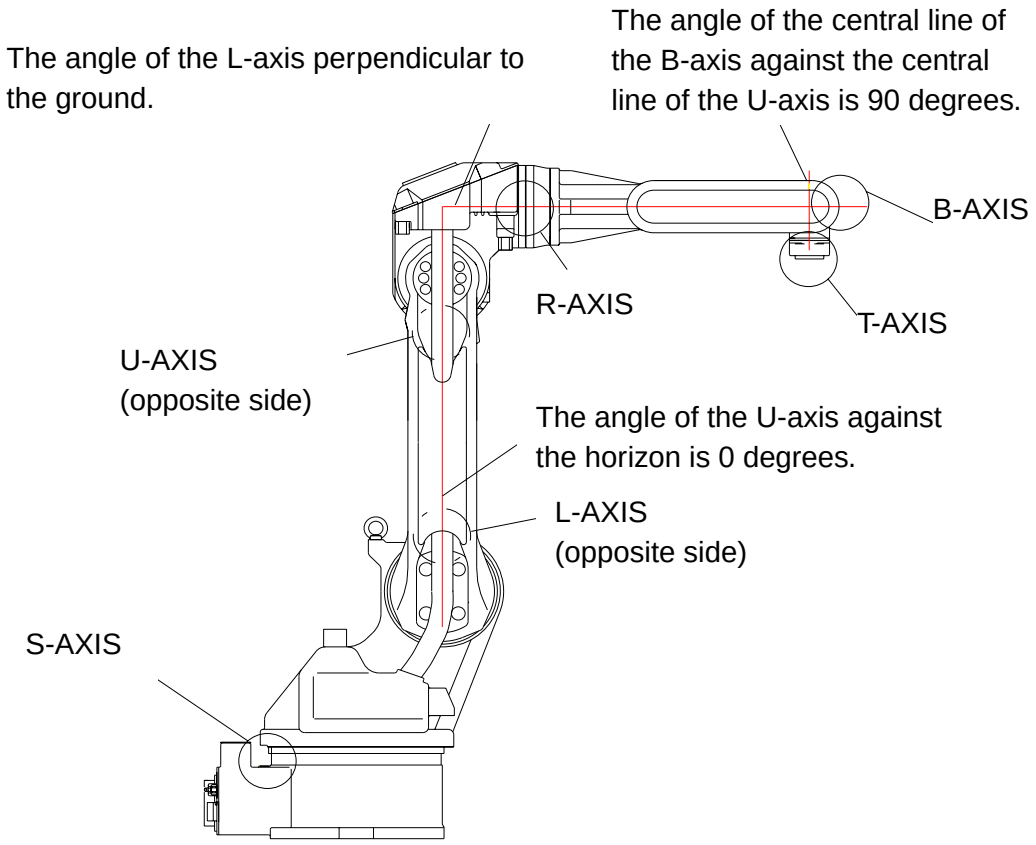

Home positions for the UP6

Confirm whether the home position calibration mark (of each axis of the manipulator) are accurately matched with each other.
The home position is correctly registered if home position mark for each axis is matched accurately.

NOTE Contact Customer Service if you encounter any problems performing home position calibration.

8 Final Notes

Refer to the manuals listed below for additional information in work involving robot operations such as teaching and playback.

- Operator's Manual For Beginners
  Operating procedures are clarified for beginning users.
  The operations are explained carefully in order.

- Operator's Manual
  Composed of several sections, each corresponding to operation of the system.
  Work involving setting and diagnosis of the controller, alarm explanations, setting of the home position, etc.

- MOTOMAN-***** Instruction manual
  Covers manipulator topics

- INFORM Manual
  Covers the INFORM robot programming language

- Concurrent I/O and Parameter Manual
  Covers concurrent I/O and parameters

MOTOMAN
SETUP MANUAL

TOKYO OFFICE
New Pier Takeshiba South Tower, 1-16-1, Kaigan, Minatoku, Tokyo 105-0022, Japan
Phone 81-3-5402-4511 Fax 81-3-5402-4580

MOTOMAN INC. HEADQUARTERS
805 Liberty Lane West Carrollton, OH 45449, U.S.A.
Phone 1-937-847-6200 Fax 1-937-847-6277

MOTOMAN INC. TROY FACILITY
1050 S. Dorset, Troy, OH 45373, U.S.A.
Phone 1-937-440-2600 Fax 1-937-440-2626

MOTOMAN INC. COLUMBUS OFFICE
Dublin Tech Mart 5000 Blazer Memonal Parkway Dublin, OH 43017-3359, U.S.A.
Phone 1-614-718-4200 Fax 1-614-718-4222

YASKAWA ELECTRIC EUROPE GmbH
Am Kronberger Hang 2, 65824 Schwalbach,Germany.
Phone 49-6196-569-300 Fax 49-6196-888-301

Motoman Robotics AB
Box 504 S38525 Torsås, Sweden
Phone 46-486-48800 Fax 46-486-41410

Motoman Robotec GmbH
Kammerfeldstraβe1,85391 Allershausen, Germany
Phone 49-8166-900 Fax 49-8166-9039

YASKAWA ELECTRIC KOREA CORPORATION
Kfpa Bldg #1201, 35-4 Youido-dong, Yeongdungpo-Ku, Seoul 150-010, Korea
Phone 82-2-784-7844 Fax 82-2-784-8495

YASKAWA ELECTRIC (SINGAPORE) PTE. LTD.
151 Lorong Chuan, #04-01, New Tech Park Singapore 556741, Singapore
Phone 65-282-3003 Fax 65-289-3003

YATEC ENGINEERING CORPORATION
Shen Hsiang Tang Sung Chiang Building 10F 146 Sung Chiang Road, Taipei, Taiwan
Phone 886-2-2563-0010 Fax 886-2-2567-4677

BEIJING OFFICE
Room No. 301 Office Building of Beijing Intemational Club, 21 Jianguomenwai Avenue, Beijing 100020, China
Phone 86-10-6532-1850 Fax 86-10-6532-1851

SHANGHAI OFFICE
27 Hui He Road Shanghai 200437 China
Phone 86-21-6553-6600 Fax 86-21-6531-4242

YASKAWA JASON (HK) COMPANY LIMITED
Rm. 2909-10, Hong Kong Plaza, 186-191 Connaught Road West, Hong Kong
Phone 852-2803-2385 Fax 852-2547-5773

TAIPEI OFFICE
Shen Hsiang Tang Sung Chiang Building 10F 146 Sung Chiang Road,Taipei, Taiwan
Phone 886-2-2563-0010 Fax 886-2-2567-4677

BEIJING YASKAWA BEIKE AUTOMATION ENGINEERING CO.,LTD.
30 Xue Yuan Road, Haidian, B eijing P.R. China Post Code: 100083
Phone 86-10-6233-2782 Fax 86-10-6232-1536

SHOUGANG MOTOMAN ROBOT CO., LTD.
7,Yongchang-North Street, Beijing Economic Technological Investment & Development Area,
Beijing 100076, P.R. China
Phone 86-10-6788-0551 Fax 86-10-6788-2878

YASKAWA ELECTRIC CORPORATION

YASKAWA

Specifications are subject to change without notice
for ongoing product modifications and improvements.

MANUAL NO. RE-TA-A503 ①

© Printed in Japan August 1999 98-12

MOTOMAN-SV3X
INSTRUCTIONS

YR-SV3-J00
YR-SV3-J01

Upon receipt of the product and prior to initial operation, read these instructions thoroughly, and retain for future reference.

MOTOMAN INSTRUCTIONS

- MOTOMAN SETUP MANUAL
- MOTOMAN-SV3X INSTRUCTIONS
- YASNAC XRC INSTRUCTIONS
- YASNAC XRC OPERATOR'S MANUAL
- YASNAC XRC OPERATOR'S MANUAL for BEGINNERS

The YASNAC XRC operator's manuals above correspond to specific usage.
Be sure to use the appropriate manual.

YASKAWA

MANUAL NO. RE-MTO-A217 ①

MANDATORY

- This instruction manual is intended to explain operating instructions and maintenance procedures primarily for the MOTOMAN-SV3X.
- General items related to safety are listed in the Safety Manual Section 1: Safety. To ensure correct and safe operation, carefully read the Setup Manual before reading this manual.

CAUTION

- Some drawings in this manual are shown with the protective covers or shields removed for clarity. Be sure all covers and shields are replaced before operating this product.
- The drawings and photos in this manual are representative examples and differences may exist between them and the delivered product.
- YASKAWA may modify this model without notice when necessary due to product improvements, modifications, or changes in specifications. If such modification is made, the manual number will also be revised.
- If your copy of the manual is damaged or lost, contact a YASKAWA representative to order a new copy. The representatives are listed on the back cover. Be sure to tell the representative the manual number listed on the front cover.
- YASKAWA is not responsible for incidents arising from unauthorized modification of its products. Unauthorized modification voids your product's warranty.

NOTES FOR SAFE OPERATION

Read this manual carefully before installation, operation, maintenance, or inspection of the YASNAC XRC.
In this manual, the Notes for Safe Operation are classified as “WARNING”, “CAUTION”, “MANDATORY”, or “PROHIBITED”.

WARNING	Indicates a potentially hazardous situation which, if not avoided, could result in death or serious injury to personnel.
CAUTION	Indicates a potentially hazardous situation which, if not avoided, could result in minor or moderate injury to personnel and damage to equipment. It may also be used to alert against unsafe practices.
MANDATORY	Always be sure to follow explicitly the items listed under this heading.
PROHIBITED	Must never be performed.

Even items described as “CAUTION” may result in a serious accident in some situations.
At any rate, be sure to follow these important items.

NOTE To ensure safe and efficient operation at all times, be sure to follow all instructions, even if not designated as “CAUTION” and “WARNING”.

WARNING

- Before operating the manipulator, check that servo power is turned off when the emergency stop buttons on the playback panel or programming pendant are pressed.
  When the servo power is turned off, the SERVO ON READY lamp on the playback panel and the SERVO ON LED on the programming pendant are turned off.

  Injury or damage to machinery may result if the emergency stop circuit cannot stop the manipulator during an emergency. The manipulator should not be used if the emergency stop buttons do not function.

  Emergency Stop Button

- Once the emergency stop button is released, clear the cell of all items which could interfere with the operation of the manipulator.
  Then turn the servo power ON.

  Injury may result from unintentional or unexpected manipulator motion.

  Release of Emergency Sto 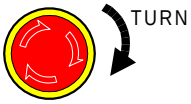

- Always set the Teach Lock before entering the robot work envelope to teach a job.

  Operator injury can occur if the Teach Lock is not set and the manipulator is started from the playback panel.

- Observe the following precautions when performing teaching operations within the working envelope of the manipulator :
  - View the manipulator from the front whenever possible.
  - Always follow the predetermined operating procedure.
  - Ensure that you have a safe place to retreat in case of emergency.

  Improper or unintended manipulator operation may result in injury.

- Confirm that no persons are present in the manipulator's work envelope and that you are in a safe location before:
  - Turning on the YASNAC XRC power
  - Moving the manipulator with the programming pendant
  - Running check operations
  - Performing automatic operations

  Injury may result if anyone enters the working envelope of the manipulator during operation. Always press an emergency stop button immediately if there are problems.
  The emergency stop button is located on the right side of both the YASNAC XRC playback panel and programming pendant.

CAUTION

- Perform the following inspection procedures prior to conducting manipulator teaching. If problems are found, repair them immediately, and be sure that all other necessary processing has been performed.
  -Check for problems in manipulator movement.
  -Check for damage to insulation and sheathing of external wires.

- Always return the programming pendant to the hook on the XRC cabinet after use.

  The programming pendant can be damaged if it is left in the manipulator's work area, on the floor, or near fixtures.

- Read and understand the Explanation of the Alarm Display in the Setup Manual before operating the manipulator:

Definition of Terms Used Often in This Manual

The MOTOMAN manipulator is the YASKAWA industrial robot product.
The manipulator usually consists of the controller, the playback panel, the programming pendant, and supply cables.
In this manual, the equipment is designated as follows:

Equipment	Manual Designation
YASNAC XRC Controller	XRC
YASNAC XRC Playback Panel	Playback Panel
YASNAC XRC Programming Pendant	Programming Pendant

AN EXPLANATION OF WARNING LABELS

The following warning labels are attached to the manipulator.
Always follow the warnings on the labels.
Also, an indentification label with important information is placed on the body of the manipulator. Prior to operating the manipulator, confirm the contents.

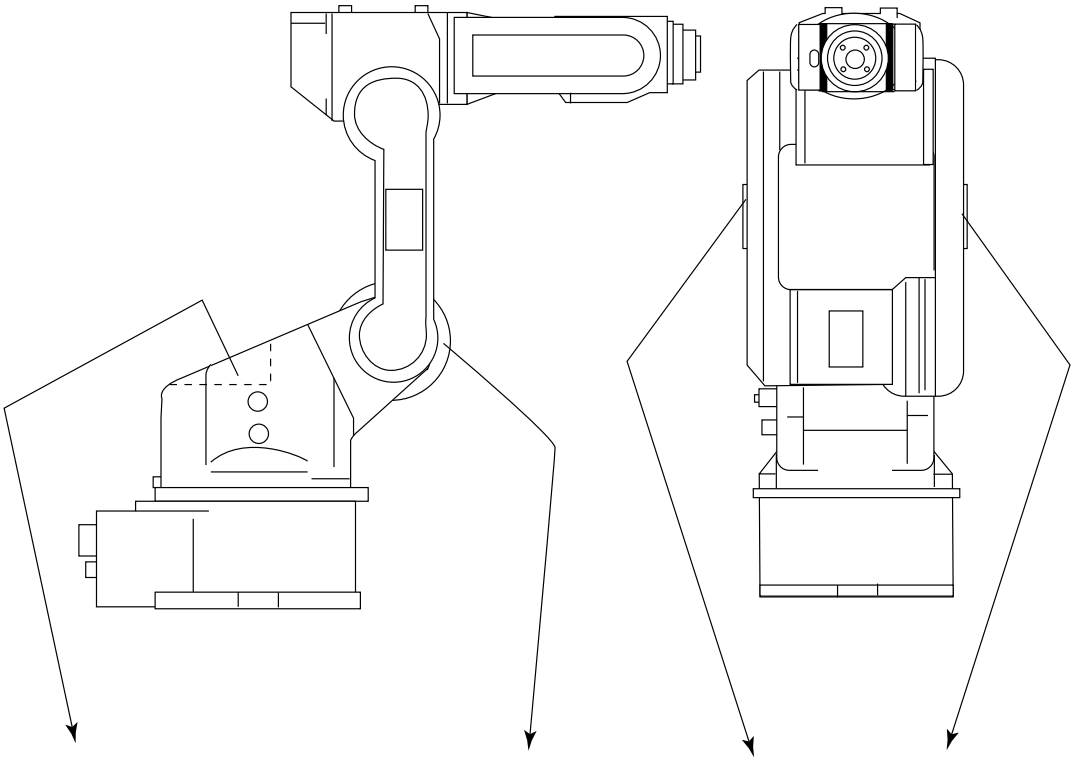

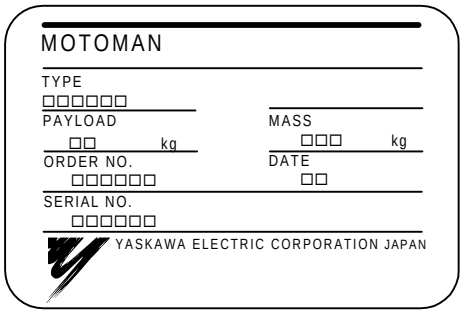

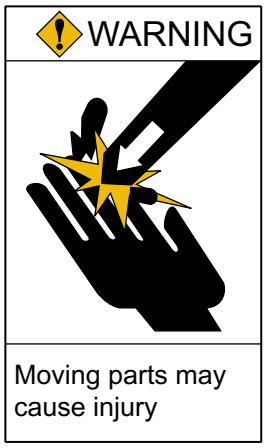

1 Receiving
1.1 Checking Package Contents 1-1
1.2 Checking the Order Number 1-2

2 Transporting
2.1 Transporting Method 2-1
2.1.1 Using the Crane 2-1
2.1.2 Using the Forklift 2-2
2.2 Shipping Bolts and Jigs 2-3

3 Installation
3.1 Safety Guard Installation 3-2
3.2 Mounting Procedures for Manipulator Baseplate 3-2
3.2.1 When the Manipulator and Mounting Fixture are Installed on a Common Flat Steel Plate 3-3
3.2.2 When the Manipulator is Mounted Directly on the Floor 3-4
3.3 Types of Mounting 3-5
3.3.1 S-Axis Working Range 3-5
3.3.2 Affixing the Manipulator Base 3-5
3.3.3 Precautions to Prevent the Manipulator from Falling 3-5
3.4 Location 3-6

4 Wiring
4.1 Grounding 4-2
4.2 Cable Connection 4-2
4.2.1 Connection to the Manipulator 4-2
4.2.2 Connection to the XRC 4-3

5 Basic Specifications
5.1 Basic Specifications 5-1
5.2 Part Names and Working Axes 5-2
5.3 Baseplate Dimensions 5-2
5.4 Dimensions and Working Range 5-3
5.5 B-Axis Working Range 5-4
5.6 Alterable Working Range 5-4

6 Allowable Load for Wrist Axis and Wrist Flange
6.1 Allowable Wrist Load 6-1
6.2 Wrist Flange 6-2

7 System Application
7.1 Mounting Equipment 7-1
7.1.1 Allowable Load 7-1
7.2 Incorporated Wire and Airduct 7-2

8 Motoman Construction
8.1 Internal Connections 8-1

9 Maintenance and Inspection
9.1 Inspection Schedule 9-1
9.2 Notes on Maintenance Procedures 9-5
9.2.1 Battery Unit Replacement 9-5
9.2.2 Grease Replenishment for S-Axis Speed Reducer 9-7
■ Grease Replenishment 9-7
9.2.3 Grease Replenishment for L-Axis Speed Reducer 9-8
■ Grease Replenishment 9-8
9.2.4 Grease Replenishment for U-Axis Speed Reducer 9-9
■ Grease Replenishment 9-9
9.2.5 Grease Replenishment for R-,B-Axes Speed Reducer 9-10
9.2.6 Grease Replenishment for T-Axis Speed Reducers 9-11
9.2.7 Notes for Maintenance 9-12

10 Recommended Spare Parts

11 Parts List
11.1 S-Axis Driving Unit 11-1
11.2 L,U-Axis Driving Unit 11-3
11.3 R-Axis Driving Unit 11-5
11.4 Wrist Unit 11-7

1 Receiving

CAUTION

- Confirm that the manipulator and the XRC have the same order number. Special care must be taken when more than one manipulator is to be installed.

  If the numbers do not match, manipulators may not perform as expected and cause injury or damage.

1.1 Checking Package Contents

When the package arrives, check the contents for the following standard items (Any additional options ordered should be checked as well.):

- Manipulator
- XRC
- Programming Pendant
- Feeder Cable Between Controller and Manipulator

1.2 Checking the Order Number

Check that the order number of the manipulator corresponds to the XRC. The order number is located on a label as shown below.

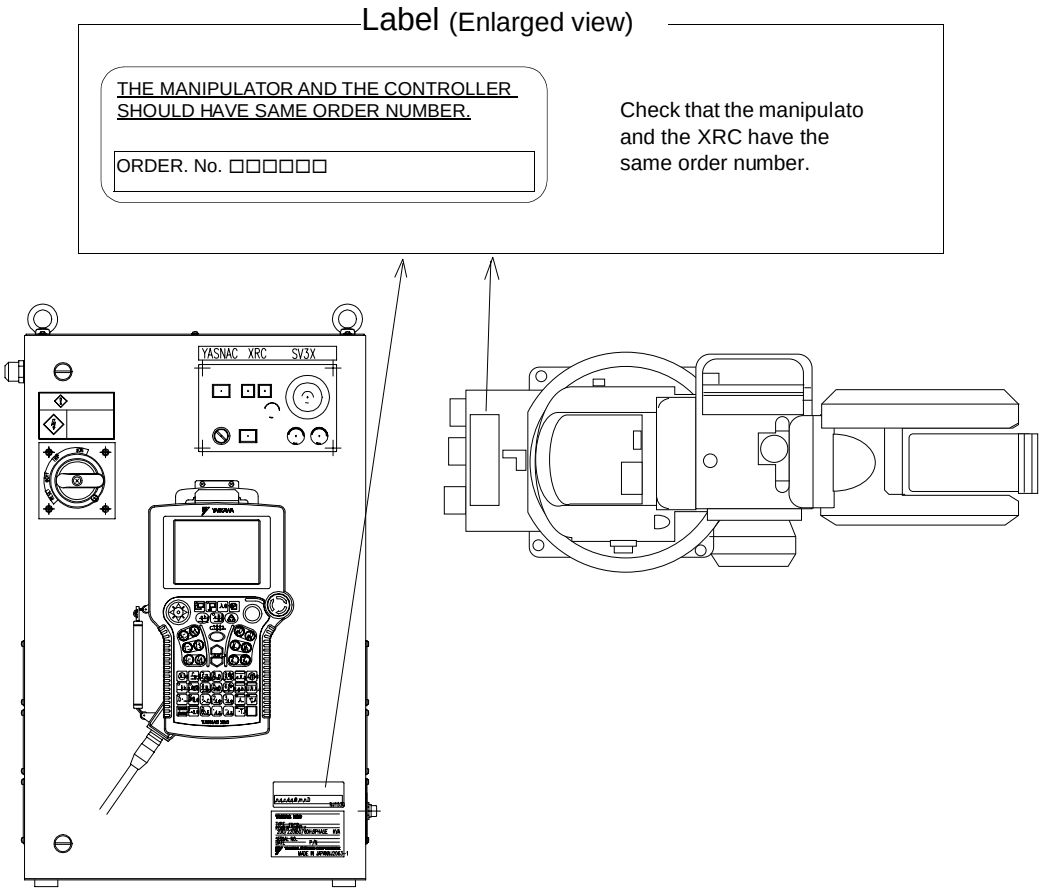

(a) XRC (Front View) (b) Manipulator (Top View)

Fig. 1 Location of Order Number Labels

2 Transporting

CAUTION

- Sling applications and crane or forklift operations must be performed by authorized personnel only.

  Failure to observe this caution may result in injury or damage.

- Avoid excessive vibration or shock during transporting.

  The system consists of precision components, so failure to observe this caution may adversely affect performance.

2.1 Transporting Method

2.1.1 Using the Crane

As a rule, when removing the manipulator from the package and moving it, a crane should be used. The manipulator should be lifted using wire rope threaded through attached eyebolts. Be sure the manipulator is fixed with jigs before transporting, and lift it in the posture as shown in " Fig. 2 Transporting Position ".

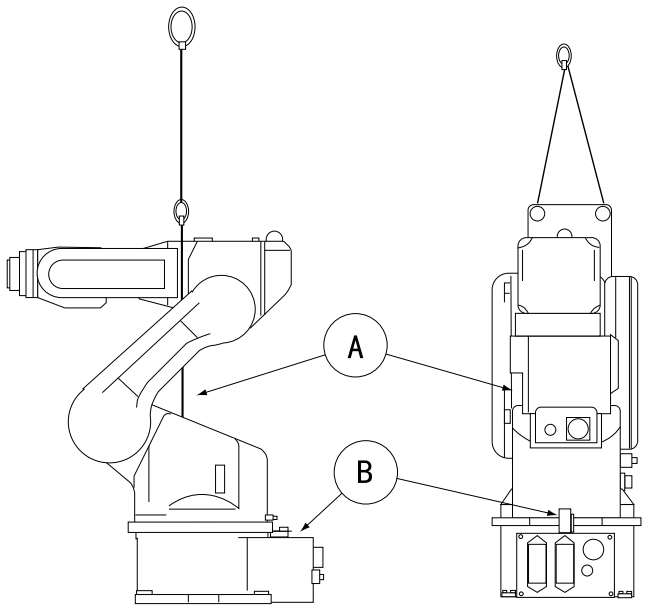

Fig. 2 Transporting Position

2.1.2 Using the Forklif

When using a forklift, the manipulator should be fixed on a pallet with shipping bolts and jigs as shown in " Fig. 3 Using the Forklift ". Insert claws under the pallet and lift it. The pallet must be strong enough to support the manipulator. Transporting of the manipulator must be performed slowly in order to avoid overturning or slippage.

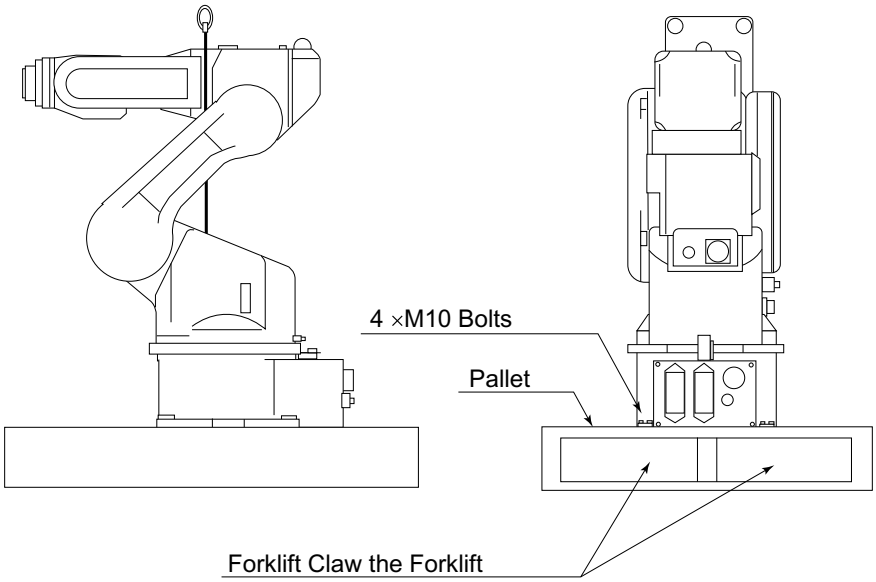

Fig. 3 Using the Forklift

NOTE

- Check that the eyebolts are securely fastened.
- The weight of the manipulator is approximately 35kg including the shipping bolts and jigs. Use a wire rope strong enough to withstand the weight.
- Attached eyebolts are designed to support the manipulator weight. Do not use them for anything other than transporting the manipulator.
- Mount the shipping bolts and jigs for transporting the manipulator.
- Avoid exerting force on the arm or motor unit when transporting, use caution when using transporting equipment other than a crane or forklift, as injury may occur.

2.2 Shipping Bolts and Jigs

The manipulator is provided with shipping bolts and jigs at points A and B (" Fig. 2 Transporting Position ").

- The jigs are painted yellow.
- The number of hexagon socket head cap screws are: A: M6 X 3, B: M5 X 2

NOTE

Before turning on the power, check to be sure that the shipping bolts and jigs have been removed. The shipping bolts and jigs then must be stored for future use, in the event that the manipulator must be moved again.

3 Installation

WARNING

- Install the safety guards.

  Failure to observe this warning may result in injury or damage.

- Install the manipulator in a location where the fully extended arm and tool will not reach the wall, safety guards, or controller.

  Failure to observe this warning may result in injury or damage.

- Do not start the manipulator or even turn on the power before it is firmly anchored.

  The manipulator may overturn and cause injury or damage.

- When mounting the manipulator on the ceiling or wall, the base section must have sufficient strength and rigidity to support the weight of the manipulator. Also, it is necessary to consider countermeasures to prevent the manipulator from falling.

  Failure to observe these warnings may result in injury or damage.

CAUTION

- Do not install or operate a manipulator that is damaged or lacking parts.

  Failure to observe this caution may cause injury or damage.

- Before turning on the power, check to be sure that the shipping bolts and jigs have been removed.

  Failure to observe this caution may result in damage to the driving parts.

3.1 Safety Guard Installation

To insure safety, be sure to install safety guards. They prevent unforeseen accidents with personnel and damage to equipment. The following is quoted for your information and guidance. (ISO10218)

Responsibility for Safeguarding

The user of a manipulator or robot system shall ensure that safeguards are provided and used in accordance with Sections 6, 7, and 8 of this standard. The means and degree of safeguarding, including any redundancies, shall correspond directly to the type and level of hazard presented by the robot system consistent with the robot application. Safeguarding may include but not be limited to safeguarding devices, barriers, interlock barriers, perimeter guarding, awareness barriers, and awareness signals.

3.2 Mounting Procedures for Manipulator Baseplate

The manipulator should be firmly mounted on a baseplate or foundation strong enough to support the manipulator and withstand repulsion forces during acceleration and deceleration. Construct a solid foundation with the appropriate thickness to withstand maximum repulsion forces of the manipulator as shown in Table 1.
During installation, if out of the plane is not right, the manipulator shape may change and its functional ability may be compromised. Out of the plane for installation must be kept at 0.5mm or less. Mount the baseplate in either of the following ways: " 3.2.1 When the Manipulator and Mounting Fixture are Installed on a Common Flat Steel Plate " or " 3.2.2 When the Manipulator is Mounted Directly on the Floor ".

Table. 1 Maximum repulsion forces of the manipulator

Horizontal rotating maximum torque (S-axis moving direction)	500N • m
Vertical rotating maximum torque (LU-axis moving direction)	700N • m

3.2.1 When the Manipulator and Mounting Fixture are Installed on a Common Flat Steel Plate

The common base should be rugged and durable to prevent shifting of the manipulator or the mounting fixture. The thickness of the common base is 30mm or more and an M10 size or larger anchor bolt is recommended. Affix the manipulator by fastening the plate with the M10 (mm) anchor bolts. The plate is tapped for M10 (35mm length) bolts. Tighten the bolts and anchor bolts securely so that they will not work loose during operation. See " Fig. 4 Mounting the Manipulator Baseplate " for the method.

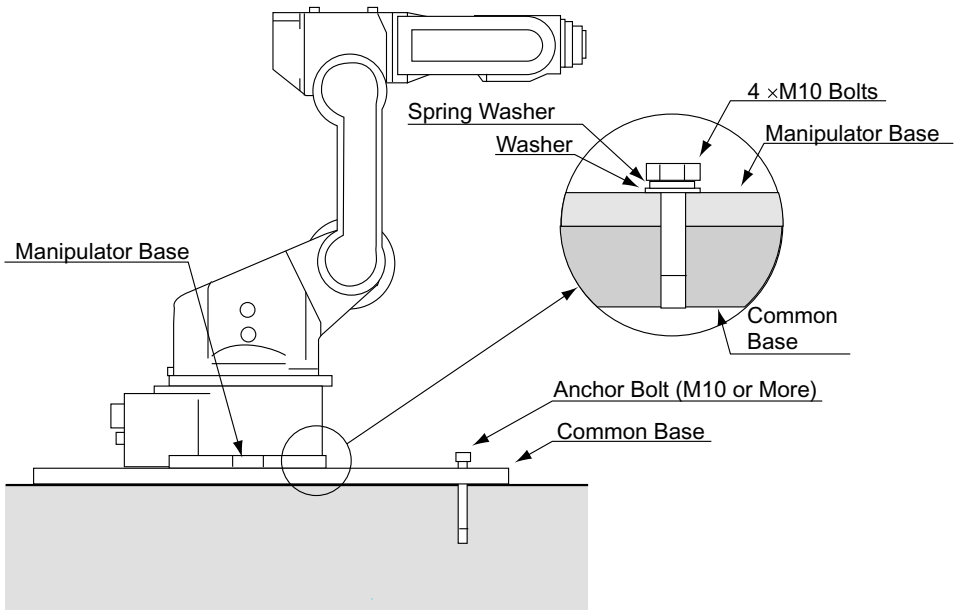

Fig. 4 Mounting the Manipulator Baseplate

3.2.2 When the Manipulator is Mounted Directly on the Floor

The floor should be strong enough to support the manipulator. Construct a solid foundation with the appropriate thickness to withstand maximum repulsion forces of the manipulator as shown inTable 1. As a rough standard, when there is a concrete thickness (floor) is 150mm or more, the base of the manipulator can be fixed directly to the floor with M10 anchor bolts. Before mounting the manipulator, however, check that the floor is level and that all cracks, etc. are repaired. Any thickness less than 150mm is insufficient for mounting, even if the floor is concrete.

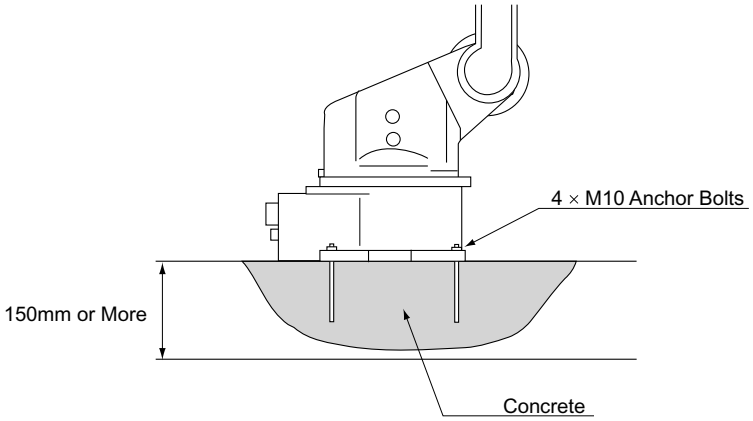

Fig. 5 Direct Mounting on the Floor

3.3 Types of Mounting

The manipulator can be mounted in three different ways: floor-mounted (standard), wall-mounted, and ceiling-mounted types are available. For wall- and ceiling-mounted types, the three points listed below are different from the floor-mounted types.

- S-Axis Working Range
- Affixing the Manipulator Base
- Precautions to Prevent the Manipulator from Falling

3.3.1 S-Axis Working Range

When performing a wall installation, the S-Axis movable range must be ±30°.
S-Axis motor becomes with the brake.

3.3.2 Affixing the Manipulator Base

When performing a wall or ceiling installation, be sure to use four M10 hexagon socket head cap bolts. Use a torque of 48N• m when screwing in the bolts.

3.3.3 Precautions to Prevent the Manipulator from Falling

When performing wall or ceiling installations, for safety purposes, take measures to keep the manipulator from falling. Refer to " Fig. 6 When Using Ceiling and Wall-Mounted Types " for details.

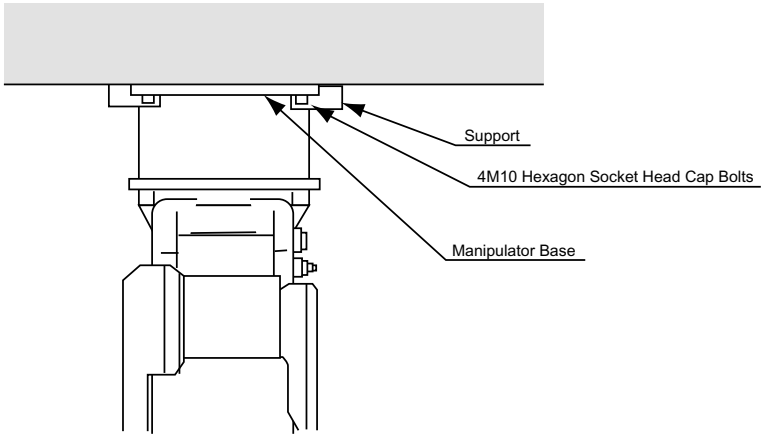

Fig. 6 When Using Ceiling and Wall-Mounted Types

NOTE When using wall-mounted or ceiling mounted types, contact your Yaskawa representative.

3.4 Location

When the manipulator is installed, it is necessary to satisfy the undermentioned environmental conditions:

- 0° to +45°C (Ambient temperature)
- 20 to 80%RH (no moisture)
- Free from dust, soot, or water
- Free from corrosive gases or liquid, or explosive gases
- Free from excessive vibration (less than 0.5G)
- Free from large electrical noise (plasma)
- Out of the plane for installation is 0.5mm or less

4 Wiring

WARNING

- Ground resistance must be 100 Ω or less.

  Failure to observe this warning may result in fire or electric shock.

- Before wiring, make sure to turn the primary power supply off, and put up a warning sign. (ex. DO NOT TURN THE POWER ON.)

  Failure to observe this warning may result in fire or electric shock.

CAUTION

- Wiring must be performed by authorized or certified personnel.

  Failure to observe this caution may result in fire or electric shock.

4.1 Grounding

Follow local regulations for grounding line size.

NOTE

- Do not use this line in common with other ground lines or grounding electrodes for other electric power, motor power, welding devices, etc.
- Where metal ducts, metallic conduits, or distributing racks are used for cable laying, ground in accordance with Electric EquipmentTechnical Standards.

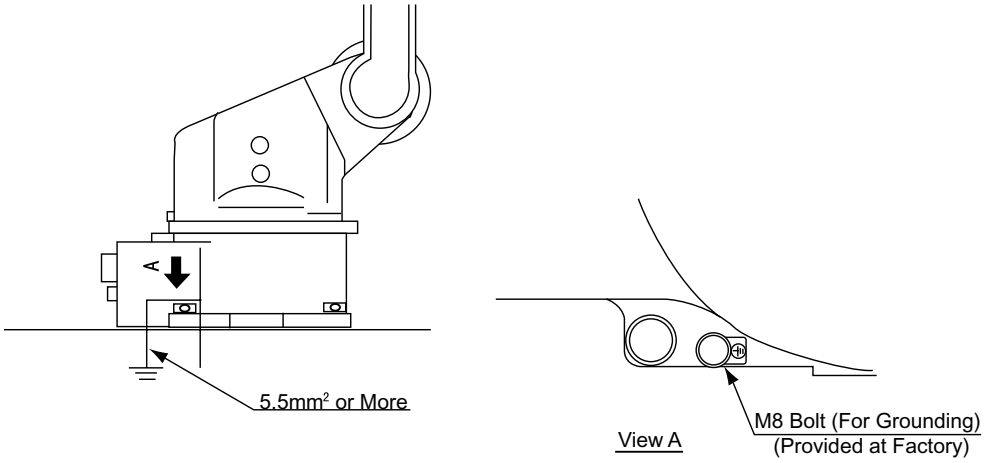

Fig. 7 Grounding Method

4.2 Cable Connection

There are two cables for the power supply; a signal cable for detection (1BC) and a power cable (2BC). Connect these cables to the manipulator base connectors and the XRC. Refer to " Fig. 9 (a Power Cable Connection to the Manipulator ", " Fig. 9 (b Power Cable Connection to the XRC ".

4.2.1 Connection to the Manipulator

Before connecting two cables to the manipulator, verify the numbers: 1BC and 2BC on both power supply cables and the manipulator base connectors. When connecting, adjust the cable connector positions to the main key positions of the manipulator, and insert cables in the order of 2BC, 1BC, and then set the lever until hearing a “click”.
Tighten the connectors with the M3 hexagon socket head cap bolt (Accessory) at the end.

4.2.2 Connection to the XRC

Remove the two entrance cable covers on the XRC side. Pass the signal cable for detection (1BC) through one entrance, the power cable (2BC) through the other entrance, and then fasten bolts on the entrances.
Connect each cable to the boards. Be sure to verify the numbers on both the cable and board connectors before connecting, and to fasten the bolts on 1BC connectors to prevent cables from loosening.

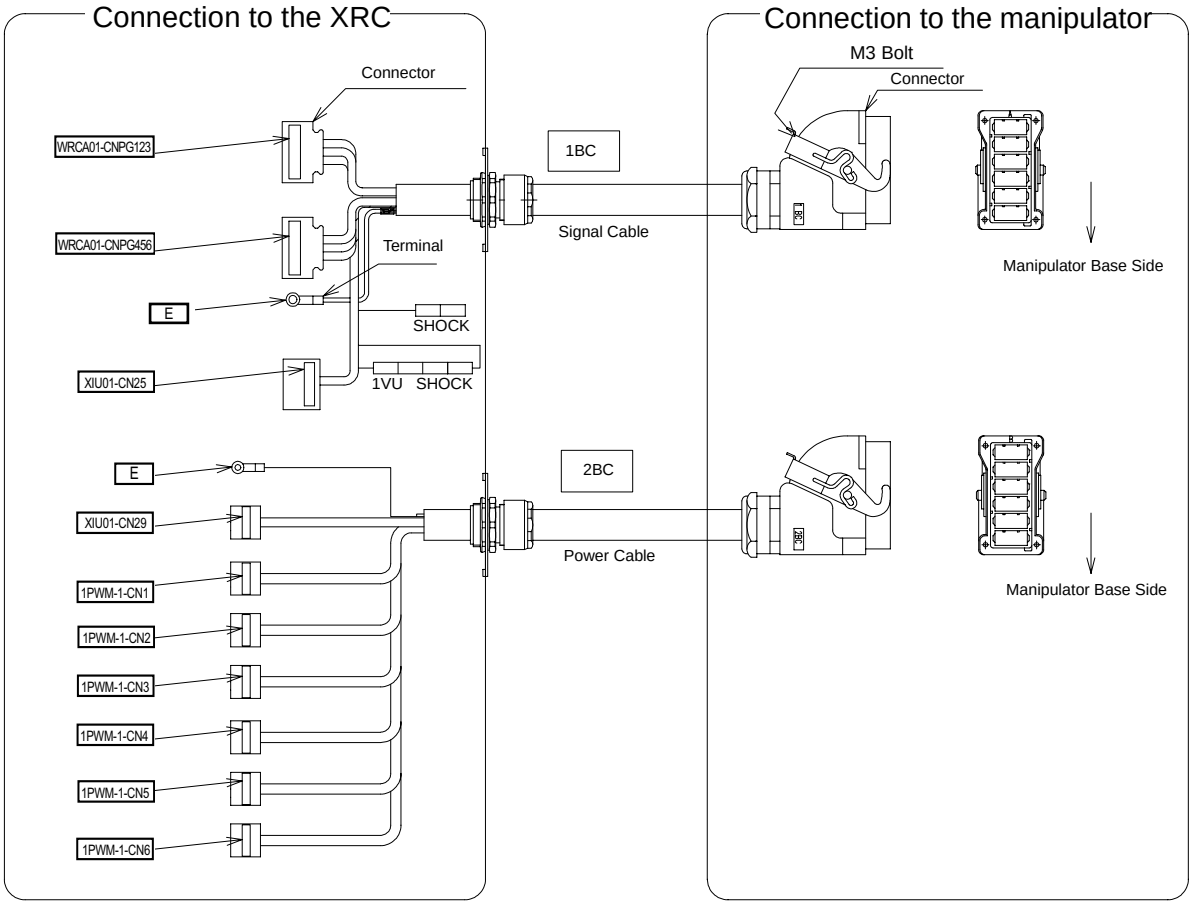

Fig. 8 Power Cables

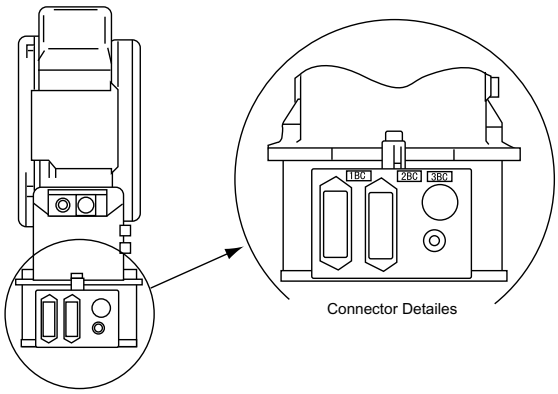

Fig. 9 (a) Power Cable Connection to the Manipulator

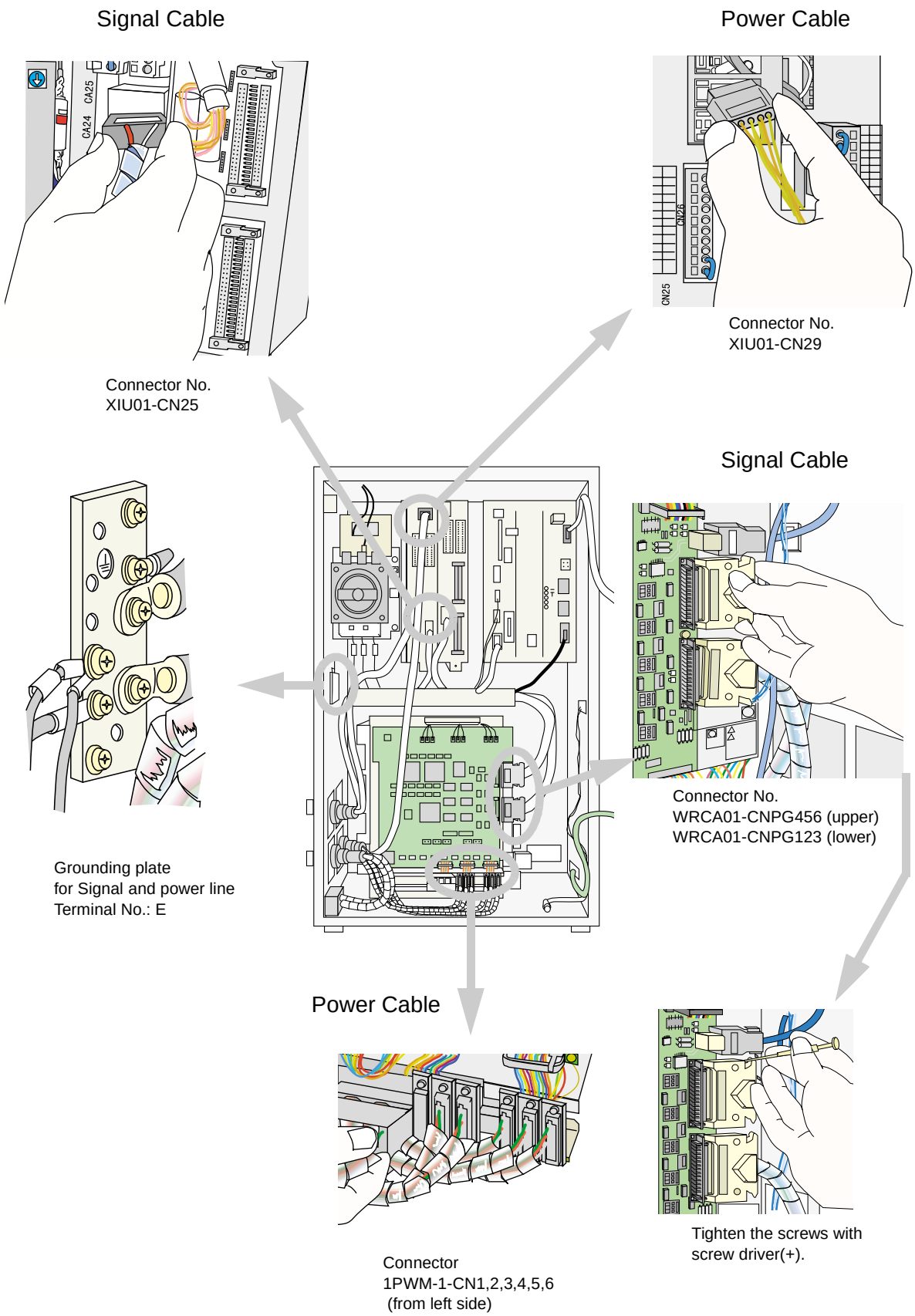

Fig. 9 (b) Power Cable Connection to the XRC

5 Basic Specifications

5.1 Basic Specifications

Table. 2 Basic Specifications* 1

Operation Mode		Vertically Articulated
Degree of Freedo		6
Payloa		3kg
Repetitive Positioning Accuracy* 2		±0.03m
Motion Range	S-Axis (turning)	±170°
	L-Axis (lower arm)	+150°, -45°
	U-Axis (upper arm)	+190°, -70°
	R-Axis (wrist roll)	±180°
	B-Axis (wrist pitch/yaw)	±135°
	T-Axis (wrist twist)	±350°
Maximum Speed	S-Axis	3.67 rad/s, 210°/s
	L-Axis	2.79 rad/s, 170°/s
	U-Axis	3.93 rad/s, 225°/s
	R-Axis	5.23 rad/s, 300°/s
	B-Axis	5.23 rad/s, 300°/s
	T-Axis	7.33 rad/s, 420°/s
Allowable Moment* 3	R-Axis	5.39N•m (0.55kgf•m)
	B-Axis	5.39N•m (0.55kgf•m)
	T-Axis	2.94N•m (0.3kgf•m)
Allowable Inertia ($GD^2/4$)	R-Axis	0.1kg•m^2
	B-Axis	0.1kg•m^2
	T-Axis	0.03kg• ^{2}
Mass		30kg
Ambient Conditions	Temperature	0° to 45C°
	Humidity	20 to 80% RH (non-condensing)
	Vibration	Less than 0.5G
	Other	• Free from corrosive gasses or liquids, o explosive gasses • Clean and dry • Free from excessive electrical noise (plasma)
Power Capacity		1kVA

*** 1** SI units are used in this table. However, gravitational unit is used in ( ).

*** 2** Conformed to ISO9283

*** 3** Refer to " 6.1 Allowable Wrist Load " for details on the permissible moment of inertia.

5.2 Part Names and Working Axes

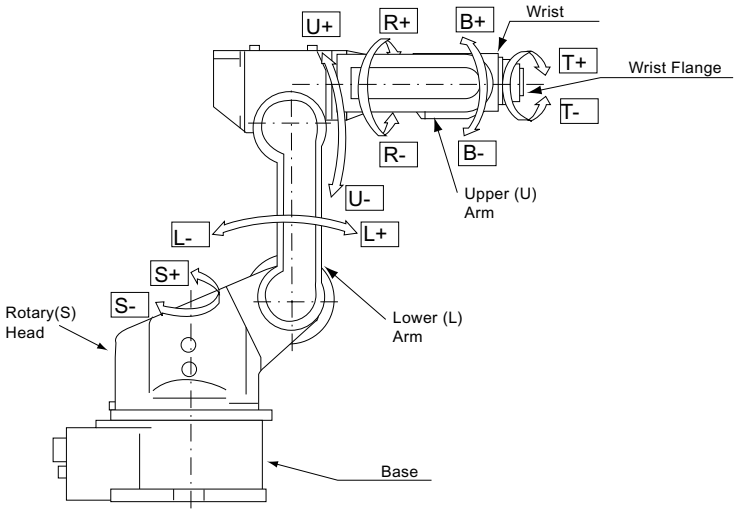

Fig. 10 Part Names and Working Axes

5.3 Baseplate Dimensions

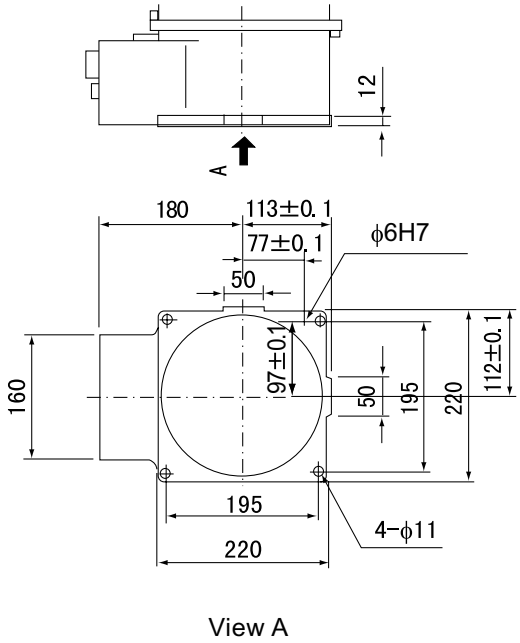

Fig. 11 Baseplate Dimensions (mm)

5.4 Dimensions and Working Range

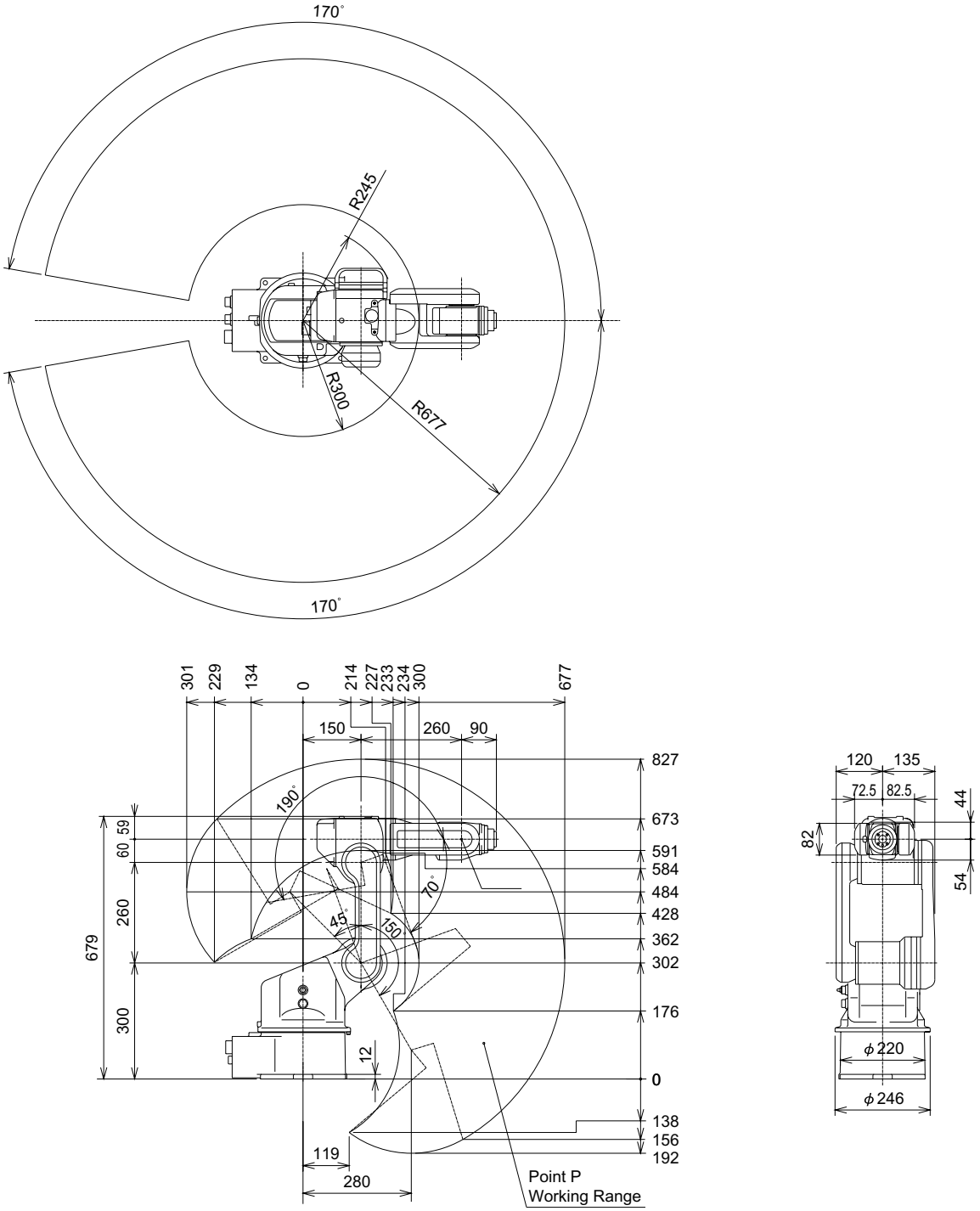

Fig. 12 Dimensions and Working Range

5.5 B-Axis Working Range

The working range of the B-Axis maintaining a constant angle to the center of the U-arm is shown in " Fig. 13 B-Axis Working Range ".

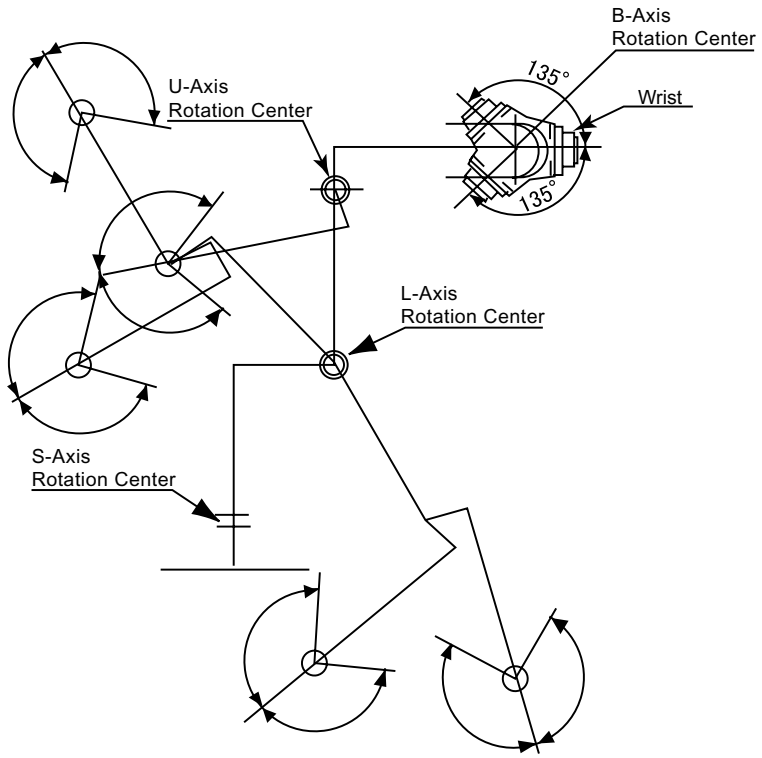

Fig. 13 B-Axis Working Range

NOTE The list might come in contact with the robot body by the pose of the basic axis (S,L,U).

5.6 Alterable Working Range

The working range of the S-Axis can be altered according to the operating conditions as shown in "Table. 3 S-Axis Working Range ". If alteration is necessary, contact your Yaskawa representative in advance.

Table. 3 S-Axis Working Range

Item	Specifications
S-Axis Working Range	±170°(standard) ±150° ±120° ±90° ±60° ±30°

6 Allowable Load for Wrist Axis and Wrist Flange

6.1 Allowable Wrist Load

The allowable wrist load is 3kg. If force is applied to the wrist instead of the load, force on R-, B-, and T-Axes should be within the valueshown in " Table. 4 Moment and Total Inertia ". Contact your Yaskawa representative for further information or assistance.

Table. 4 Momentand Total Inertia

Axis	Moment N•m (kgf•m)* 1	$GD^2/4$ Total Inertia kg•m^2
R-Axis	5.39 (0.55)	0.1
B-Axis	5.39 (0.55)	0.1
T-Axis	2.94 (0.3)	0.03

1 ( ): Gravitational unit

When the volume load is small, refer to the moment arm rating shown in " Fig. 14 Moment Arm Rating ".
The allowable total inertia is calculated when the moment is at the maximum. Contact your Yaskawa representative when only inertia moment, or load moment is small and inertia moment is large. Also, when the load mass is combined with an outside force, contact your Yaskawa representative.

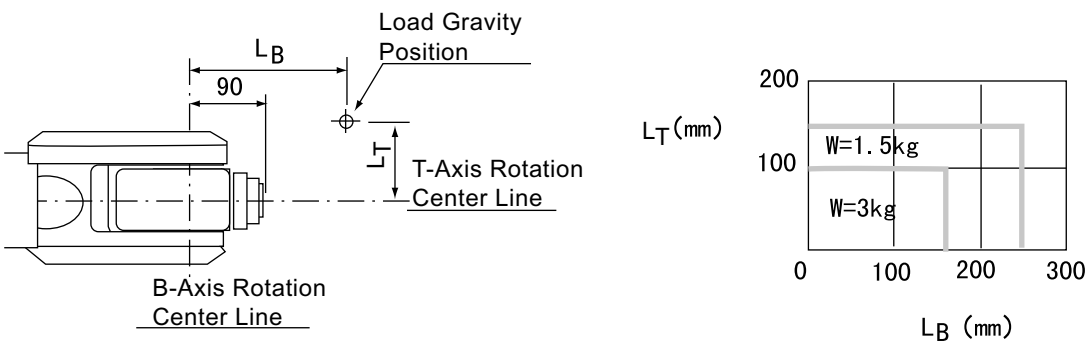

Fig. 14 Moment Arm Rating

6.2 Wrist Flange

The wrist flange dimensions are shown in " Fig. 15 Wrist Flange ". In order to see the tram marks, it is recommended that the attachment be mounted inside the fitting. Fitting depth of inside and outside fittings must be 6mm or less.

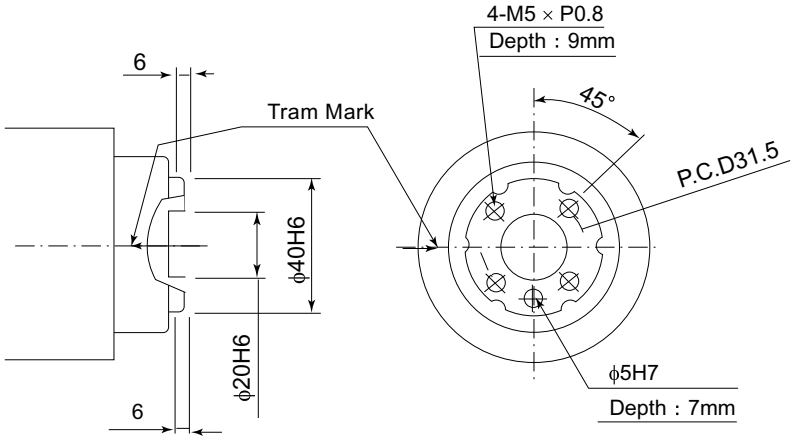

Fig. 15 Wrist Flange

NOTE Wash off anti-corrosive paint (solid color) on the wrist flange surface with thinner or light oil before mounting the tools.

7 System Application

7.1 Mounting Equipment

When peripheral equipment is attached to the U-axis, the following conditions should be observed.

7.1.1 Allowable Load

The allowable load on the U-Axis is a maximum of 4kg, including the wrist load.
For instance, when the mass installed in the wrist point is 3kg, the mass which can be installed on the upper arm becomes 1kg.

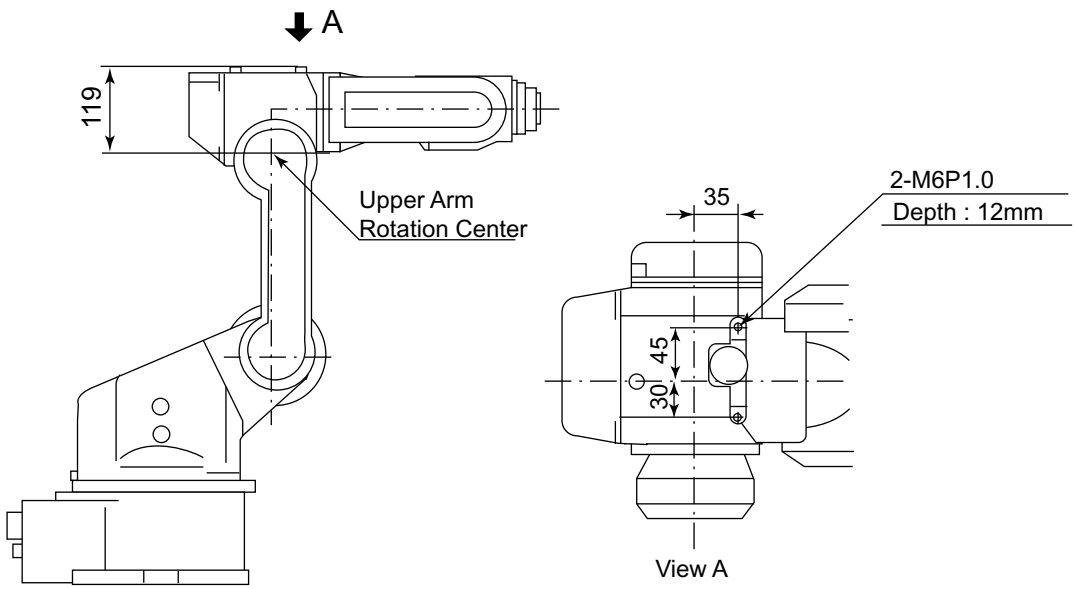

Fig. 16 Installing Peripheral Equipment

7.2 Incorporated Wire and Airduct

Wires and an air line are incorporated into the manipulator for user application. There are 12 wires and an air duct rating. The allowable current for wires must be 2.5 or below for each wire. (The total current value for pins 1 to 12 must be 40A or below). The maximum pressure for the air duct is 490 kPa (5 kgf/cm^2) and its inside diameter is ϕ5mm.

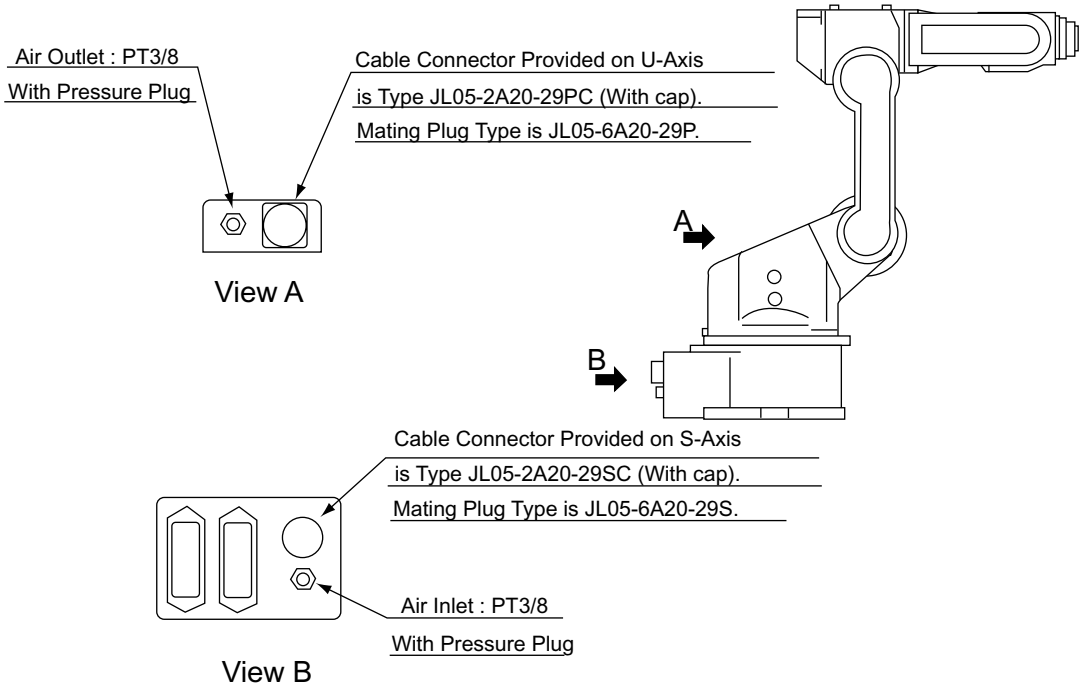

Fig. 17 Incorporated Wire and Airduct

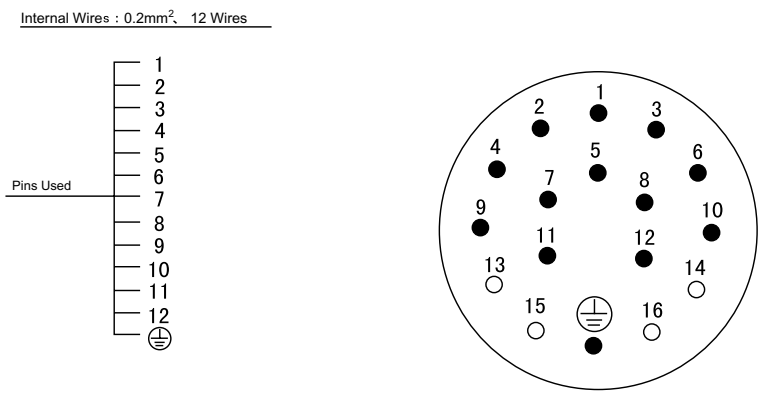

Fig. 18 Detailed Drawing of Connector Pin Numbers

The same pin number (1-12) of two connectors is connected in the lead line of single 0.2m ^{2}.

8 Motoman Construction

8.1 Internal Connections

High reliability connectors which can be easily removed are used with each connector part. For the number and location of connectors, see " Fig. 19 Location and Numbers of Connectors ".

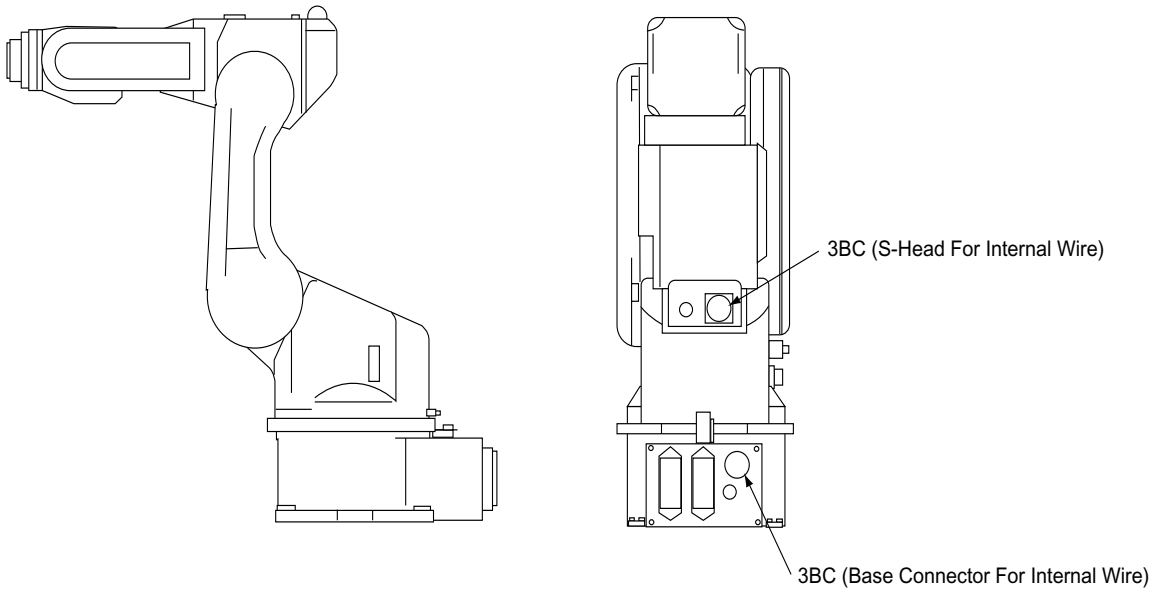

Fig. 19 Location and Numbers of Connectors

Table. 5 List of Connector Types

Name	Type of Connector
Base Connector for Internal Wire	JL05-2A20-29PC (JL05-6A20-29S: Optional)
S-head for Internal Wire	JL05-2A20-29SC (JL05-6A20-29P: Optional)

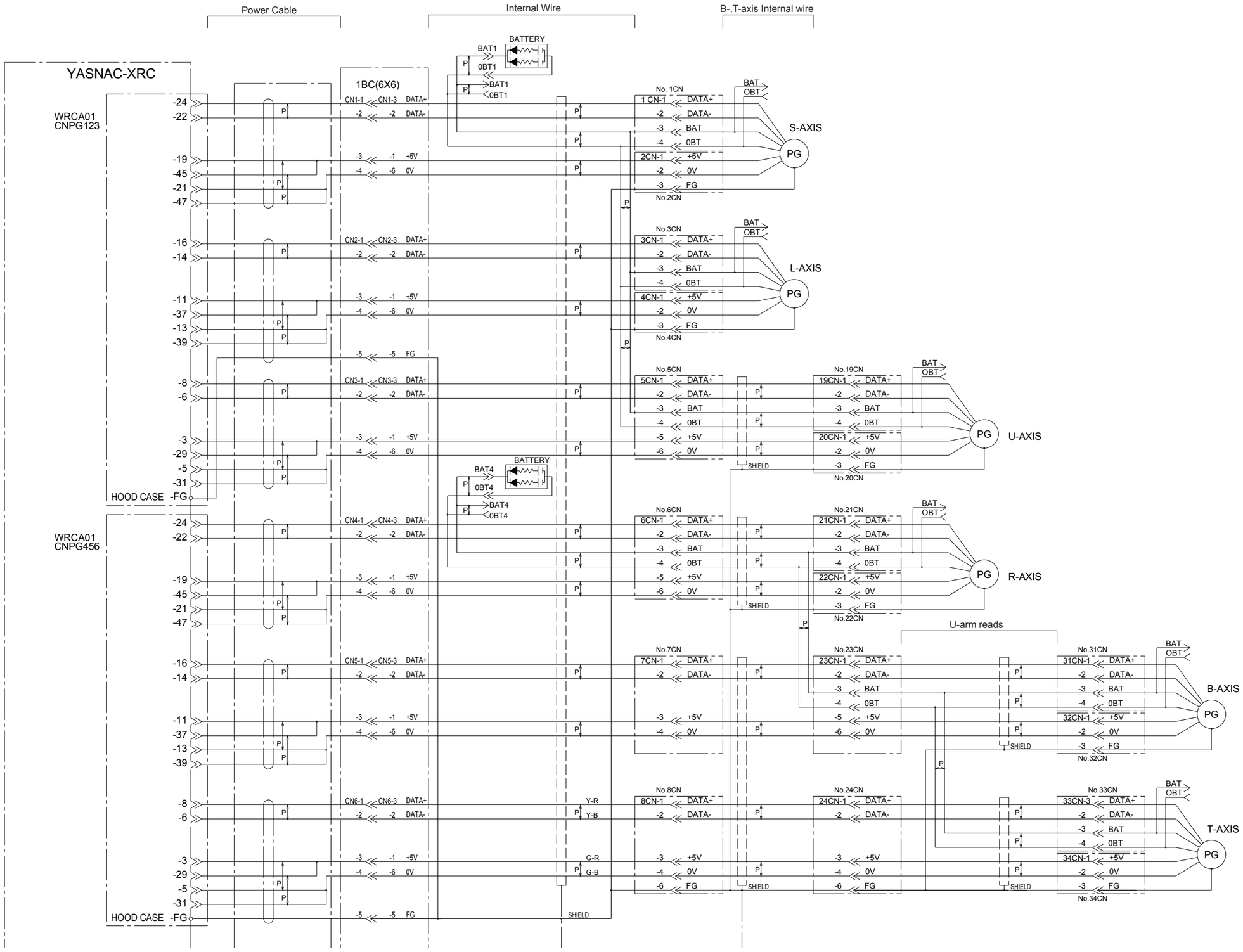

Fig. 20 (a) Internal Connection Diagram

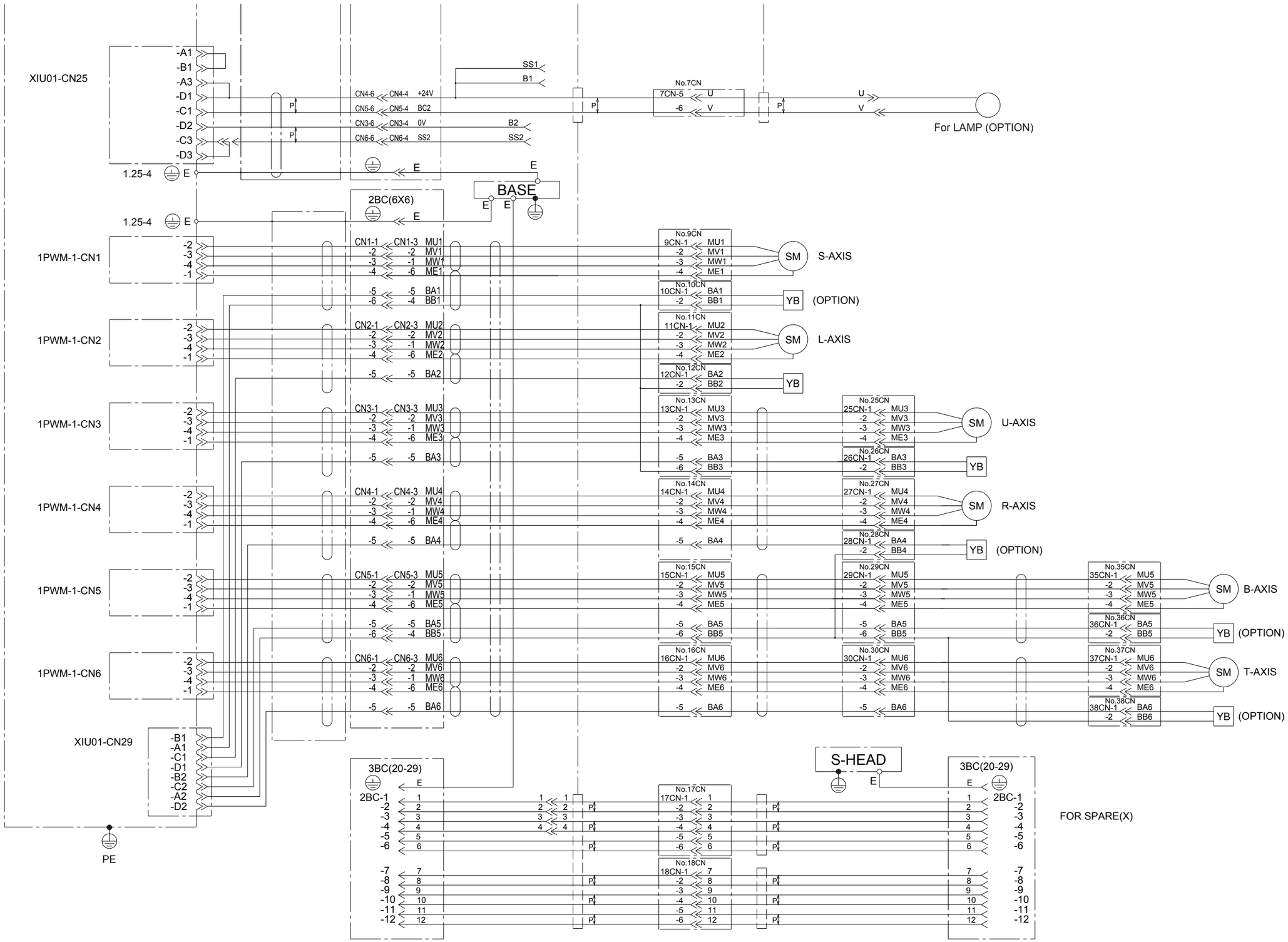

Fig. 20 (b) Internal Connection Diagram

9 Maintenance and Inspection

WARNING

- Before maintenance or inspection, be sure to turn the main power supply off, and put up a warning sign. (ex. DO NOT TURN THE POWER ON.)

  Failure to observe this warning may result in electric shock or injury.

CAUTION

- Maintenance and inspection must be performed by specified personnel.

  Failure to observe this caution may result in electric shock or injury.

- For disassembly or repair, contact your Yaskawa representative.

- The battery unit must be connected before removing detection connector when maintenance and inspection.

  Failure to observe this caution may result in the loss of home position data.

9.1 Inspection Schedule

Proper inspections are essential not only to assure that the mechanism will be able to function for a long period, but also to prevent malfunctions and assure safe operation. Inspection intervals are displayed in six levels. Conduct periodical inspections according to the inspection schedule in " Table. 6 Inspection Items ".
In " Table. 6 Inspection Items ", the inspection items are classified into three types of operation: operations which can be performed by personnel authorized by the user, operations which can be performed by personnel being trained, and operations which can be performed by service company personnel. Only specified personnel are to do inspection work.

NOTE

- The inspection interval must be based on the servo power supply on time.
- These inspections were developed for applications where the manipulator is used for arc welding work. For any different or special applications, the inspection process should be developed on an case-by-case basis.
  For axes which are used very frequently (in handling applications, etc.), it is recommended that inspections be conducted at shorter Intervals. Contact your Yaskawa representative.

Table. 6 Inspection Items

	Items*4	Schedule						Method	Operation	Inspection Charge		
		Daily	1000 H Cycle	6000 H Cycle	12000 H Cycle	24000 H	3600 H			Specified Person	Licensee	Service Company
1	Tram mark	○						Visual	Check tram mark accordance and damage at the home position.	○	○	○
2	Working area and manipulator	○						Visual	Clean the work area if dust or spatter is present. Check for damage and outside cracks.	○	○	○
3	Baseplate mounting bolts		○					Spanner Wrench	Tighten loose bolts. Replace if necessary.	○	○	○
4	Cover mount ing screws		○					Screw-driver, Wrench	Tighten loose bolts. Replace if necessary.	○	○	○
5	Base connec-tors		○					Manual	Check for loose con-nectors.	○	○	○
6	RBT-axes timing belt				○			Manual	Check for belt tension and wear.		○	○
7	Wire harness in manipulator (S-axis leads)				○			Visual Multimeter	Check for conduc-tion between the main connector of base and intermedi-ate connector with manually shaking the wire. Check for wear of protective spring*1		○	○
						○			Replace*2			
8	Wire harness in manipulator (L-arm leads))				○				Check for conduc-tion between termi-nals and wear of protective spring.*1			○
						○			Replace*2			
9	Wire harness In manipulato (U-arm leads)				○			Visual Multimeter	Check for conduc-tion between termi-nals and wear of protective spring.*1		○	○
						○			Replace*2			○
10	Battery unit in manipulator						○		Replace the battery unit when the battery alarm occurs or the manipulator drove for 36000H.		○	○

Table. 6 Inspection Items

Items* 4		Schedule						Method	Operation	Inspection Charge		
		Daily	1000 H Cycle	6000 H Cycle	12000 H Cycle	24000 H	36000 H			Specified Person	Licensee	Service Company
11	S-axis speed reducer			○				Grease Gun	Check for malfunction. (Replace if necessary.) Supply grease* 3(6000H cycle). See Par. " 9.2.2 Grease Replenishment for S-Axis Speed Reducer "		○	○
12	L-axis speed reducers			○				Grease Gun	Check for malfunction. (Replace if necessary.) Supply grease* 3(6000H cycle). See Par. " 9.2.3 Grease Replenishment for L-Axis Speed Reducer "		○	○
13	U-axis speed reducers			○				Grease Gun	Check for malfunction. (Replace if necessary.) Supply grease* 3(6000H cycle). See Par. " 9.2.3 Grease Replenishment for L-Axis Speed Reducer "		○	○
14	RB-axes speed reducers			○				Grease Gun	Check for malfunction. (Replace if necessary.) Supply grease* 3(6000H cycle). See Par. " 9.2.4 Grease Replenishment for U-Axis Speed Reducer ", " 9.2.5 Grease Replenishment for R-,B-Axes Speed Reducer "		○	○
15	T-axis speed reducers			○				Grease Gun	Check for malfunction. (Replace if necessary.) Supply grease* 3(6000H cycle). See Par. " 9.2.6 Grease Replenishment for T-Axis Speed Reducers "		○	○
16	Overhaul					○						○

*** 1** When checking for conduction with multimeter, connect the battery to “BAT” and “OBT” of connectors on the motor side for each axis, and then remove connectors on detector side for each axis from the motor. Otherwise, the home position may be lost. (Refer to " 9.2.7 Notes for Maintenance ")

*** 2** Wire harness in manipulator to be replaced at 24000H inspection.

*** 3** For the grease, refer to " Table. 7 Inspection Parts and Grease Used ".

*** 4** Inspection No. correspond to the numbers in " Fig. 21 Inspection Parts and Inspection Numbers ".

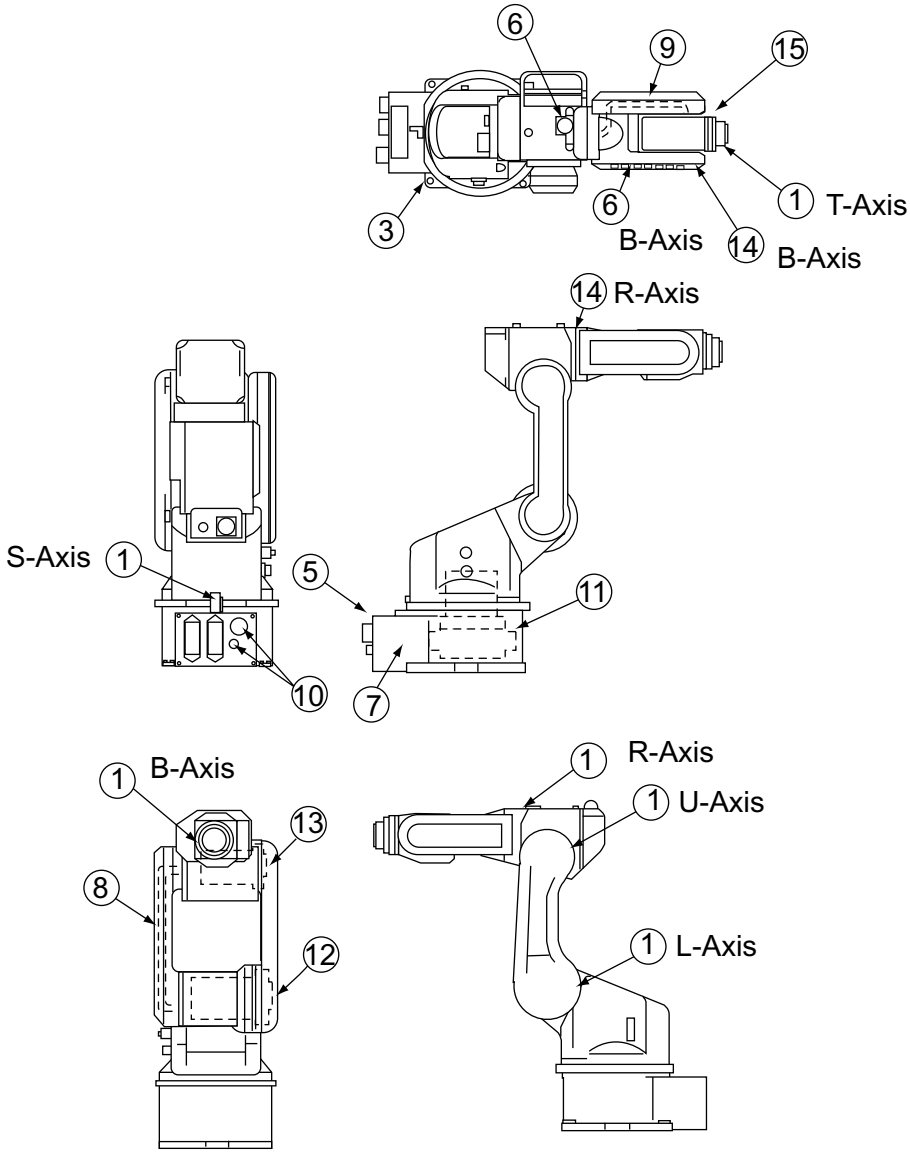

Fig. 21 Inspection Parts and Inspection Numbers

Table. 7 Inspection Parts and Grease Used

No.	Grease Used	Inspected Parts
11,12, 13 14,15	Harmonic Grease 4BNo. 2	S-, L-, U-,R-, B-, and T-axes speed reducers

The numbers in the above table correspond to the numbers in " Table. 6 Inspection Items ".

9.2 Notes on Maintenance Procedures

9.2.1 Battery Unit Replacement

If the battery alarm occurs in the XRC, replace the battery according to the following procedure:

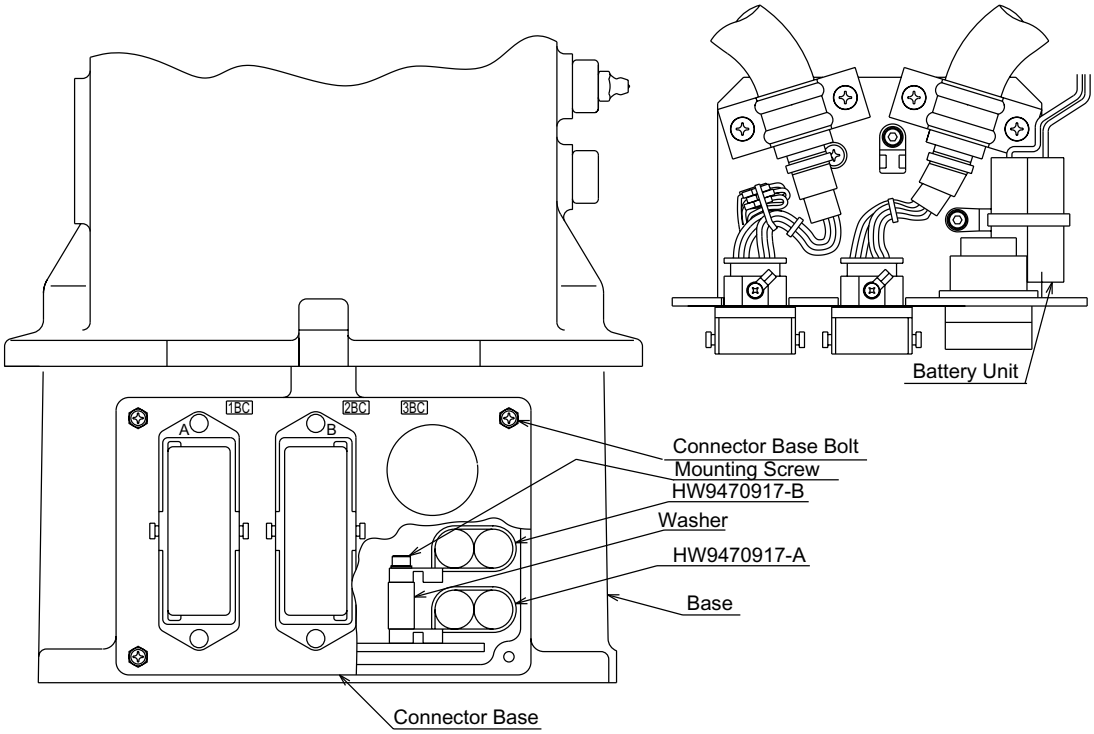

Fig. 22 Battery Location

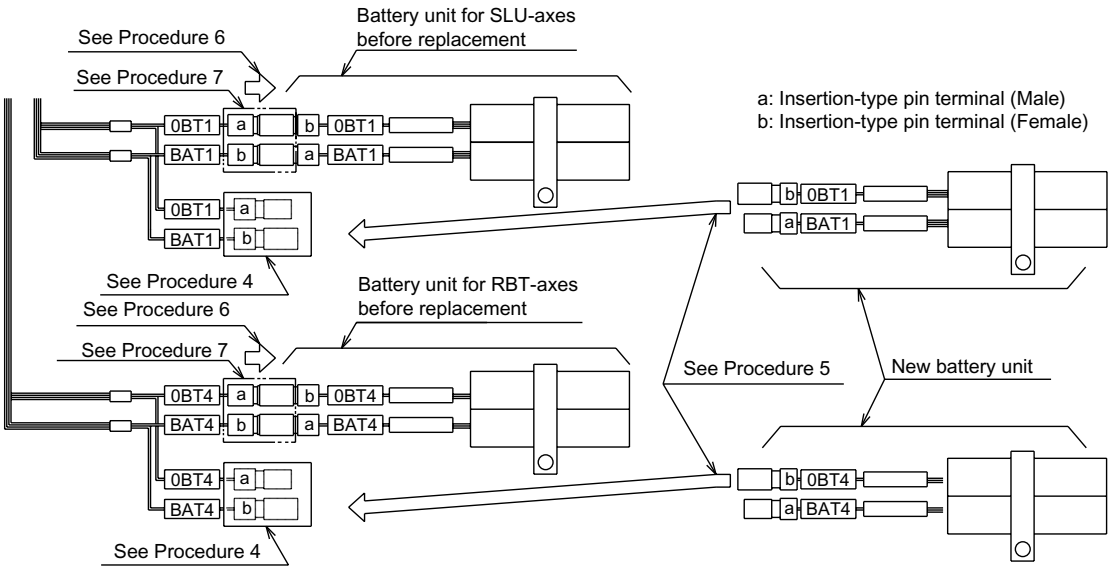

Fig. 23 Battery Connection

1. Turn the XRC main power supply off.
2. Remove the connector base, and grease tube from the union.
3. Remove the battery unit mounting screw on the Connector Base.
4. Remove the plastic tape (insulation tape) protecting the connection part of the battery unit in the manipulator.
5. Connect the new battery.
6. Remove the old battery and Washer.

NOTE Remove the old battery unit after connecting the new one so that the encoder absolute data does not disappear.

7. Protect the connection part of the battery unit in the manipulator with plastic tape (insulation tape).
8. Mount the battery unit and Washer with the screws, connect the grease tube to the union, and then mount the connector base.

9.2.2 Grease Replenishment for S-Axis Speed Reducer

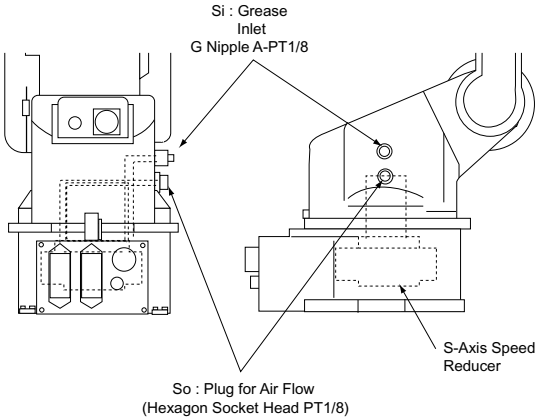

Fig. 24 S-Axis Speed Reducer Diagram

NOTE For ceiling mounted manipulators, the exhaust port and the grease inlet are inverted.

■ Grease Replenishment (Refer to " Fig. 24 S-Axis Speed Reducer Diagram ".)

Replenish the grease according to the following procedure:

1. Be sure to remove the So plug for air flow.

NOTE If grease is added with the So plug in place, the internal pressure is increased and the grease will infiltrate from the oil seal.

2. Inject the grease into the Si grease inlet using a grease gun.

Grease type: Harmonic grease 4B No.2 Amount of grease: 25cc

3. Reinstall the So plug for air flow and cover.

NOTE The So exhaust port is used for air flow. Do not inject excessive grease into the Si grease inlet.

9.2.3 Grease Replenishment for L-Axis Speed Reducer

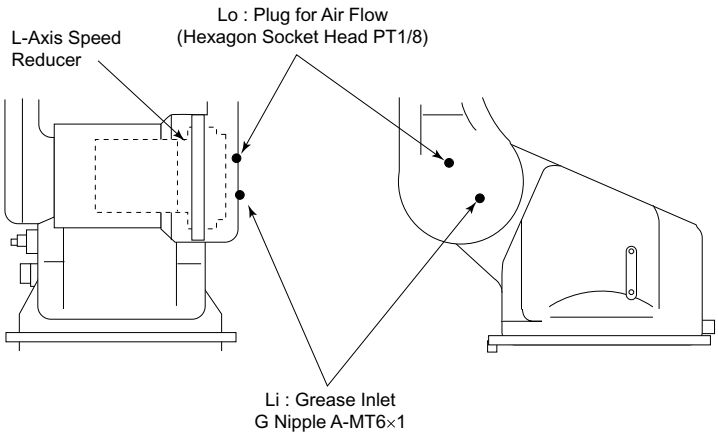

Fig. 25 L-Axis Speed Reducer Diagram

NOTE For ceiling mounted manipulators, the exhaust port and the grease inlet are inverted.

■ Grease Replenishment (Refer to " Fig. 25 L-Axis Speed Reducer Diagram ".)

1. Be sure to remove Lo plug for air flow.

NOTE If grease is added with the Lo plug in place, the internal pressure is increased and the grease will infiltrate from the oil seal.

2. Inject grease into the Li grease inlet using a grease gun.

Grease type: Harmonic grease 4B No.2 Amount of grease: 20cc

3. Wipe the Lo exhaust plugs with a cloth and reinstall the plugs.

NOTE The Lo exhaust port is used for air flow. Do not inject excessive grease into the Li grease inlet.

9.2.4 Grease Replenishment for U-Axis Speed Reducer

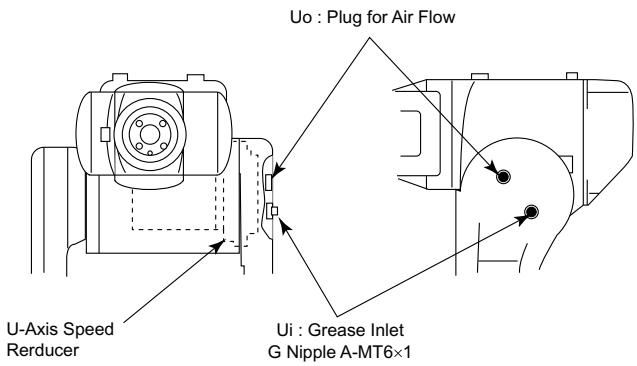

Fig. 26 U-Axis Speed Reducer Diagram

NOTE For ceiling mounted manipulators, the exhaust port and the grease inlet are inverted.

■ Grease Replenishment (Refer to " Fig. 26 U-Axis Speed Reducer Diagram ".)

1. Be sure to remove Uo plug for air flow.

NOTE If grease is added with the Uo plug in place, the internal pressure is increased and the grease will infiltrate from the oil seal.

2. Inject grease into the Ui grease inlet using a grease gun.

Grease type: Harmonic grease 4B No.2 Amount of grease: 8cc

NOTE The Lo exhaust port is used for air flow. Do not inject excessive grease into the Li grease inlet.

3. Reinstall the Uo plug for air flow.

9.2.5 Grease Replenishment for R-,B-Axes Speed Reducer

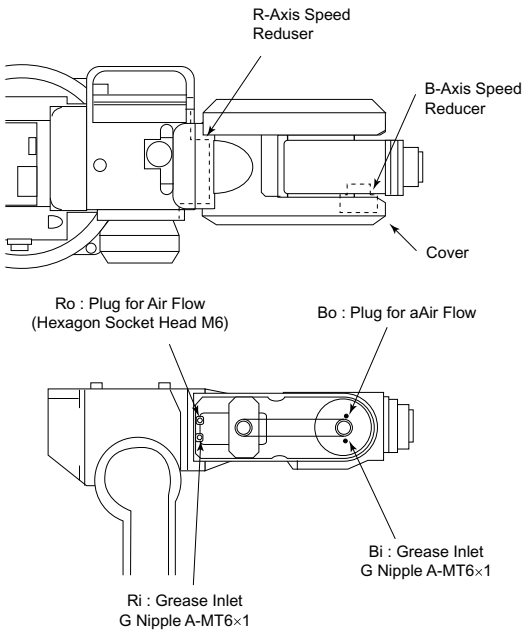

Fig. 27 R-Axis and B-axis Speed Reducer Diagram

1. Be sure to remove Ro and Bo plugs for air flow, after removing the cover.

> **NOTE** If grease is added with the Ro and Bo plugs in place, the internal pressure is increased and the grease will infiltrate from the oil seal.

2. Inject grease into the Ri and Bi grease inlet using a grease gun. (Refer to " Fig. 27 R-Axis and B-axis Speed Reducer Diagra ".)

Grease type: Harmonic grease 4B No.2 Amount of grease: For R-axis (Ri): 4cc For B-axis (Bi): 4cc

> **NOTE** The Ro and Bo exhaust port is used for air flow. Do not inject excessive grease into the Ri grease inlet.

3. Reinstall the Ro and Bo plugs for air flow and cover.

9.2.6 Grease Replenishment for T-Axis Speed Reducers

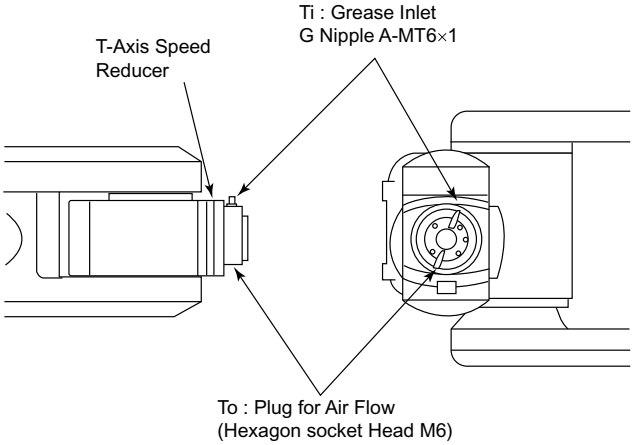

Fig. 28 T-Axis Speed Reducers Diagram

1. Be sure to remove To plug for air flow.

> **NOTE** If grease is added with the To plug in place, the internal pressure is increased and the grease will infiltrate from the oil seal.

2. Inject grease into the Ti grease inlets using a grease gun. (Refer to " Fig. 28 T-Axis Speed Reducers Diagram ".)

Grease type: Harmonic grease 4BNo.2 Amount of grease: For T-axis (Ti): 4cc

> **NOTE** The To exhaust ports are used for air flow. Do not inject excessive grease into the Ti grease inlets.

3. Reinstall the To plug for air flow.

9.2.7 Notes for Maintenance

Connect the battery unit with reference to the following figure before removing the encoder connector (with CAUTION label).

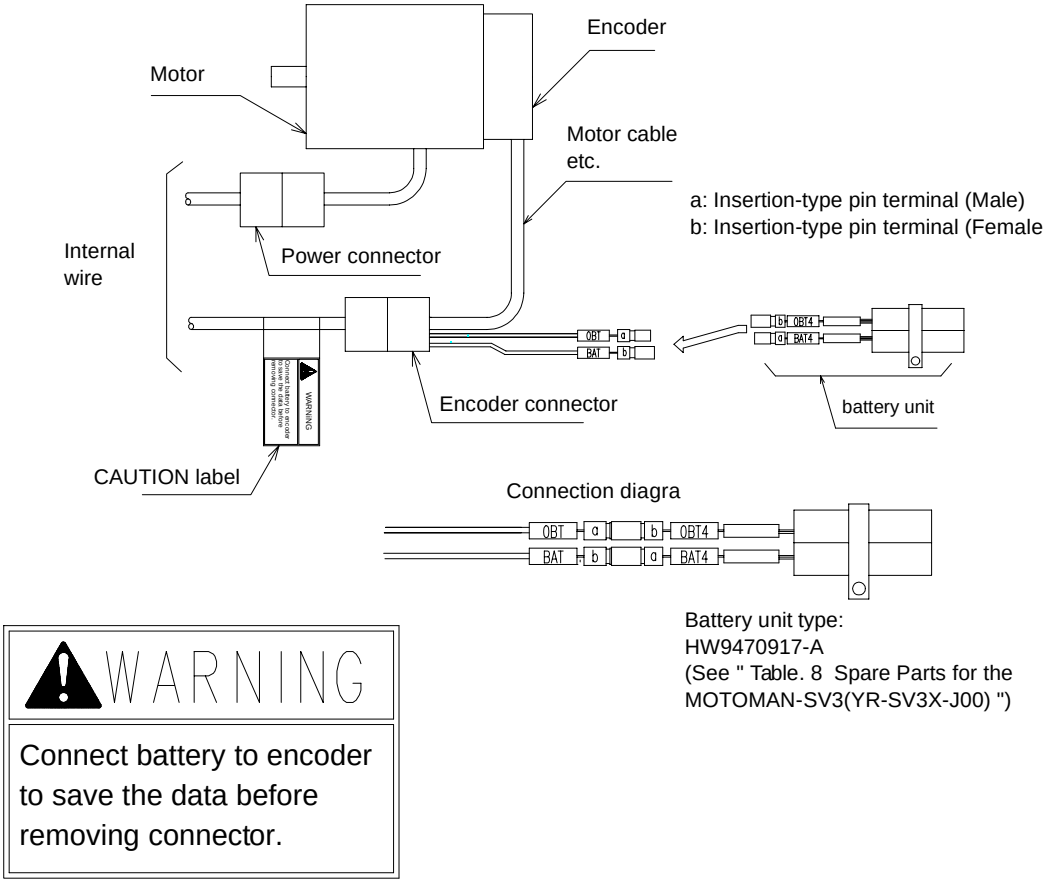

Fig. 29 Encoder Connector Diagram

10 Recommended Spare Parts

It is recommended that the following parts and components be kept in stock as spare parts for the Motoman-SV3X. The spare parts list for the Motoman-SV3X is shown below. Product performance can not be guaranteed when using spare parts from any company other than Yaskawa. The spare parts are ranked as follows:

- Rank A: Expendable and frequently replaced parts
- Rank B: Parts for which replacement may be necessary as a result of frequent operation
- Rank C: Drive unit

NOTE For replacing parts in Rank B or Rank C, contact your Yaskawa representative.

Table. 8 Spare Parts for the MOTOMAN-SV3X(YR-SV3-J00)

Rank	Parts No.	Name	Type	Manufacturer	Qty	Qty per Unit	Remarks
A	1	Grease	Harmonic Grease 4BNo.2	Yaskawa Electric Corporation	2.5kg	-	
A	2	Battery Unit	HW9470917-B	Yaskawa Electric Corporation	1	1	for SLU-axes
A	3	Battery Unit	HW9470917-A	Yaskawa Electric Corporation	1	1	for RBT-axes
B	4	R-Axis Timing Belt	050S4.5M198	Mitsuboshi Belting Limite	1	1	
B	5	B-Axis Timing Belt	050S4.5M315	Mitsuboshi Belting Limite	1	1	
B	6	S-Axis Speed Reducer	HW9381283-A	Yaskawa Electric Corporation	1	1	
B	7	L-Axis Speed Reducer	HW9381284-A	Yaskawa Electric Corporation	1	1	
B	8	U-Axis Speed Reducer	HW9381285-A	Yaskawa Electric Corporation	1	1	
B	9	R-Axis Speed Reducer	HW9381225-A	Yaskawa Electric Corporation	1	1	
B	10	B-Axis Speed Reducer	HW9381226-A	Yaskawa Electric Corporation	1	1	
B	11	T-Axis Speed Reducer	HW9381227-A	Yaskawa Electric Corporation	1	1	
B	12	S-Axis Internal Wiring	HW9171589-A	Yaskawa Electric Corporation	1	1	

Table. 8 Spare Parts for the MOTOMAN-SV3X(YR-SV3-J00)

Rank	Parts No.	Name	Type	Manufacture	Qty	Qty per Unit	Remarks
B	13	In L-arm Internal Wiring	HW9271096-A	Yaskawa Electric Corporation	1	1	U-,R-,B-,T-Axes
B	14	In U-arm Internal Wiring	HW9270889-A	Yaskawa Electric Corporation	1	1	B-,T-Axes
C	15	S-AxIs AC Servomotor	HW9381585-A SGMPH-02A1A-YR21	Yaskawa Electric Corporation	1	1	No key, lead terminal treatment completion
C	16	L-Axis AC Servomotor	HW9381586-A SGMPH-02A1A-YR11	Yaskawa Electric Corporation	1	1	With brake, No key, lead terminal treatment completion
C	17	U-AxIs AC Servomotor	HW9381587-A SGMPH-01A1A-YR11	Yaskawa Electric Corporation	1	1	With brake, No key, lead terminal treatment completion
C	18	R-,B-,T-Axes AC Servomotor	HW9381588-A SGMAH-A5A1A-YR21	Yaskawa Electric Corporation	1	3	No key, lead terminal treatment completion

Table. 9 Spare Parts for the MOTOMAN-SV3(YR-SV3X-J10)

Rank	Parts No.	Name	Type	Manufacturer	Qty	Qty per Unit	Remarks
A	1	Grease	Harmonic Grease 4BNo.2	Yaskawa Electric Corporation	2.5kg	-	
A	2	Battery Unit	HW9470917-B	Yaskawa Electric Corporation	1	1	for SLU-axes
A	3	Battery Unit	HW9470917-A	Yaskawa Electric Corporation	1	1	for RBT-axes
B	4	R-Axis Timing Belt	050S4.5M198	Mitsuboshi Belt-ing Limite	1	1	
B	5	B-Axis Timing Belt	050S4.5M315	Mitsuboshi Belt-ing Limite	1	1	
B	6	S-Axis Speed Reducer	HW9381283-A	Yaskawa Electric Corporation	1	1	
B	7	L-Axis Speed Reducer	HW9381284-A	Yaskawa Electric Corporation	1	1	
B	8	U-Axis Speed Reducer	HW9381285-A	Yaskawa Electric Corporation	1	1	
B	9	R-Axis Speed Reducer	HW9381225-A	Yaskawa Electric Corporation	1	1	
B	10	B-Axis Speed Reducer	HW9381226-A	Yaskawa Electric Corporation	1	1	
B	11	T-Axis Speed Reducer	HW9381227-A	Yaskawa Electric Corporation	1	1	
B	12	S-Axis Internal Wiring	HW9171589-A	Yaskawa Electric Corporation	1	1	
B	13	In L-arm Internal Wiring	HW9271096-A	Yaskawa Electric Corporation	1	1	U-,R-,B-,T-Axes
B	14	In U-arm Internal Wiring	HW9270889-A	Yaskawa Electric Corporation	1	1	B-,T-Axes
C	15	S-,L-Axi AC Servomotor	HW9381586-A SGMPH-02A1A-YR11	Yaskawa Electric Corporation	1	2	With brake, No key, lead terminal treatment comple tion
C	16	U-AxIs AC Servomotor	HW9381587-A SGMPH-01A1A-YR11	Yaskawa Electric Corporation	1	1	With brake, No key, lead terminal treatment comple tion
C	17	R-,B-,T-Axes AC Servomotor	HW9381589-A SGMAH-A5A1A-YR21	Yaskawa Electric Corporation	1	3	With brake, No key, lead terminal treatment comple tion

11 Parts List

11.1 S-Axis Driving Unit

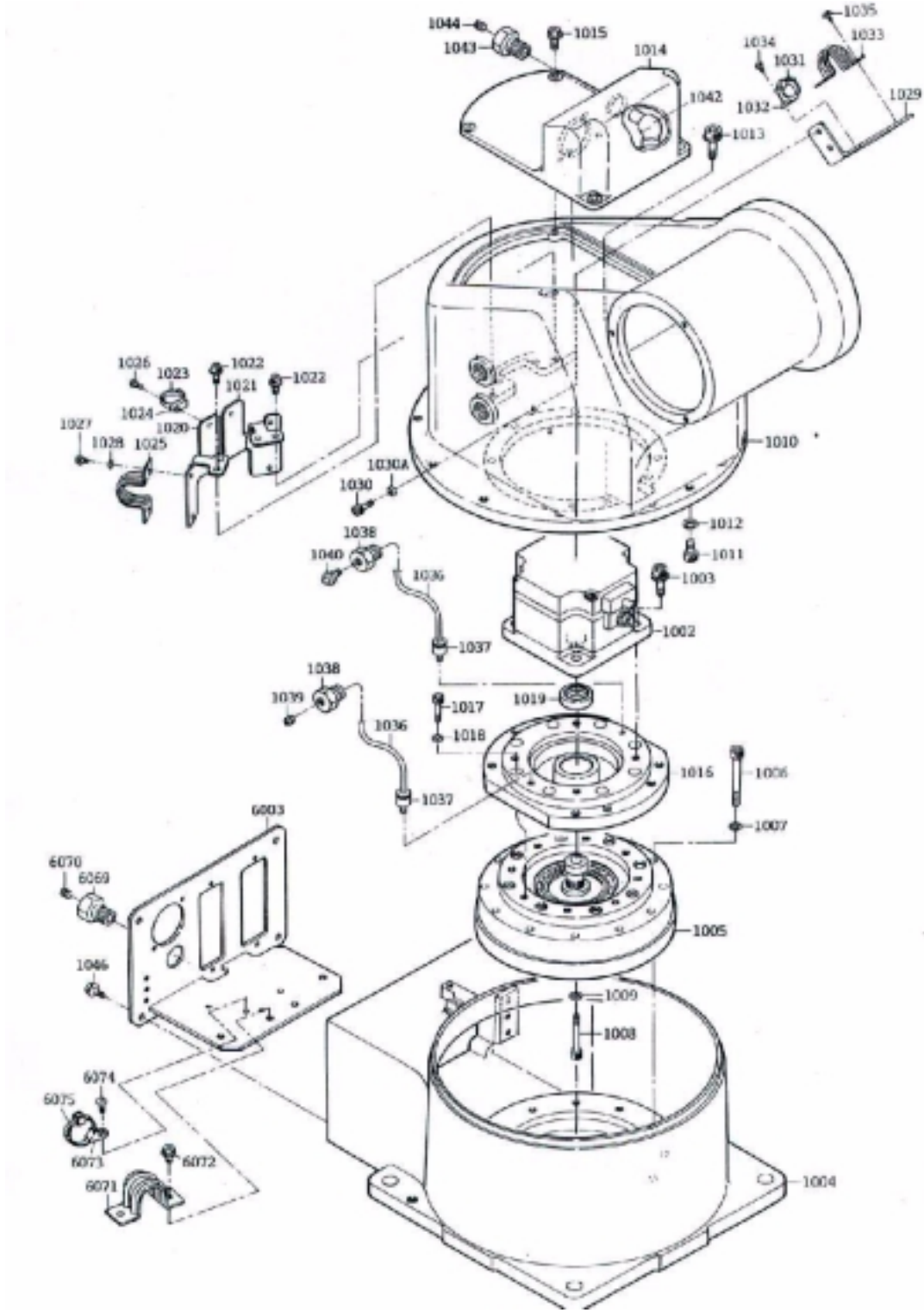

No.	DWG No.	Name	Pcs
1002	SGMPH-02A1A-YR21	AC servo motor	1
1003	GT-SA M6 × 20	Socket screw	4
1004	HW9100950-1	Base	1
1005	HW9381283-A	RV reduction gear	1
1006	M5 × 45	Socket screw	12
1007	2H-5	Spring washer	12
1008	M4 × 35	Socket screw	1
1009	2H-4	Spring washer	1
1010	HW9100847-1	S head	1
1011	M6 × 10	Socket screw	1
1012	2H-6	Spring washer	1
1013	GT-SA M6 × 20	Socket screw	7
1014	HW9301806-1	Cover	1
1015	M4 × 10	APS bolt	4
1016	HW9301922-1	M base	1
1017	M5 × 16	Socket screw	8
1018	2H-5	Spring washer	8
1019	UE15257	Oil seal	1
1020	HW9404556-1	Support	1
1021	HW9404556-2	Support	1
1022	GT-LA M4 × 16	Socket screw	4
1023	T50R	Insulok'tie	2
1024	TA1-8	Clamp	2
1025	CD-15	Saddle	2
1026	M4 × 8	Round head screw	2
1027	M5 × 8	APS bolt	4
1028	M5	Washer	4
1029	HW9404555-1	Support	1
1030	M4 × 12	Socket screw	2
1030A	2H-4	Spring washer	2
1031	T50R	Insulok'tie	1
1032	TA1-S8	Clamp	1
1033	CD-15	Saddle	1
1034	M4 × 8	Round head screw	1
1035	M5 × 8	APS bolt	2
1036	TP-6-0.25	Tube	2
1037	POC6-M5M	Union	2
1038	PMF6-01	Union	2
1039	PT1/8	Plug	1
1040	A-PT1/8	G nipple	1
1042	PLJ8	Socket Elbow	1
1043	KQE08-03	Union	1
1044	PT3/8	Plug	1
1046	M4 × 10	APS bolt	4
6003	HW9302397-A	C base	1
6069	KQE08-03	Union	1
6070	PT3/8-19	Plug	1
6071	CD-15	Saddle	2
6072	M5 × 8	APS bolt	4
6071	CD-15	Saddle	2
6072	M5 × 8	APS bolt	4
6073	TA1-S8	Clamp	2
6074	M4 × 8	Round head screw	2
6075	T50R	Insulok'tie	2

11.2 L-Axis Driving Unit

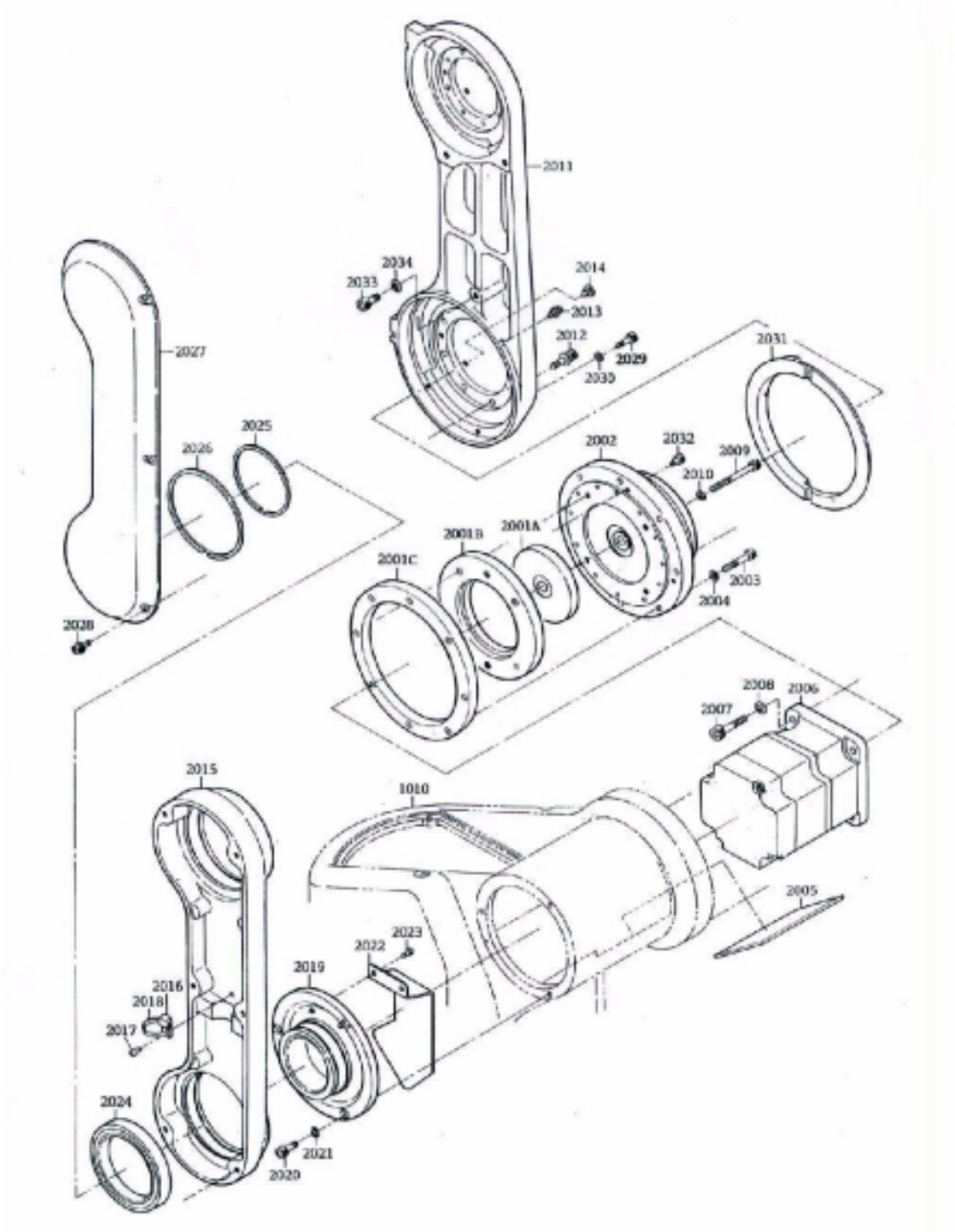

11.2 L-Axis Driving Unit

No.	DWG No.	Name	Pcs
1010	HW9100847-1	S head	1
2001A	HW9404928-1	Fly wheel	1
2001B	HW9404929-1	Distance piece	1
2001	HW9404930-1	Distance piece	1
2002	HW9381284-A	Reduction gear	1
2003	M5 × 25	Socket screw	8
2004	2H-5	Spring washer	8
2005	HW9481967-A	Sheet	1
2006	SGMPH-02A1A-YR1	Motor	1
2007	M6 × 25	Socket screw	4
2008	2H-6	Spring washer	4
2009	M4 × 45	Socket screw	1
2010	2H-4	Spring washer	1
2011	HW9100868-1	L arm A	1
2012	GT-LA M5 × 20	Socket screw	8
2013	A-MT6 × 1	Grease nipple	1
2014	LP-M5	Plug	1
2015	HW9100837-1	L arm B	1
2016	TA1-S8	Clamp	1
2017	M4 × 6	Round head screw	1
2018	T50R	Insulok'tie	1
2019	HW9301793-1	Shaft	1
2020	M4 × 12	Socket screw	3
2021	2H-4	Spring washer	3
2022	HW9404533-1	Guide	1
2023	M4 × 8	Round head screw	2
2024	6812LLU	Bearing	1
2025	WR6	Clip	1
2026	AR78	Clip	1
2027	HW9200835-1	Cover	1
2028	GT-SA M4 × 10	Socket screw	6
2029	M5 × 14	Socket screw	1
2030	2H-5	Spring washer	1
2031	HW9404532-1	stopper	1
2032	M4 × 6	Socket screw	2
2033	M6 × 10	Socket screw	1
2034	2H-6	Spring washer	1

11.3 U,R-Axis Driving Unit

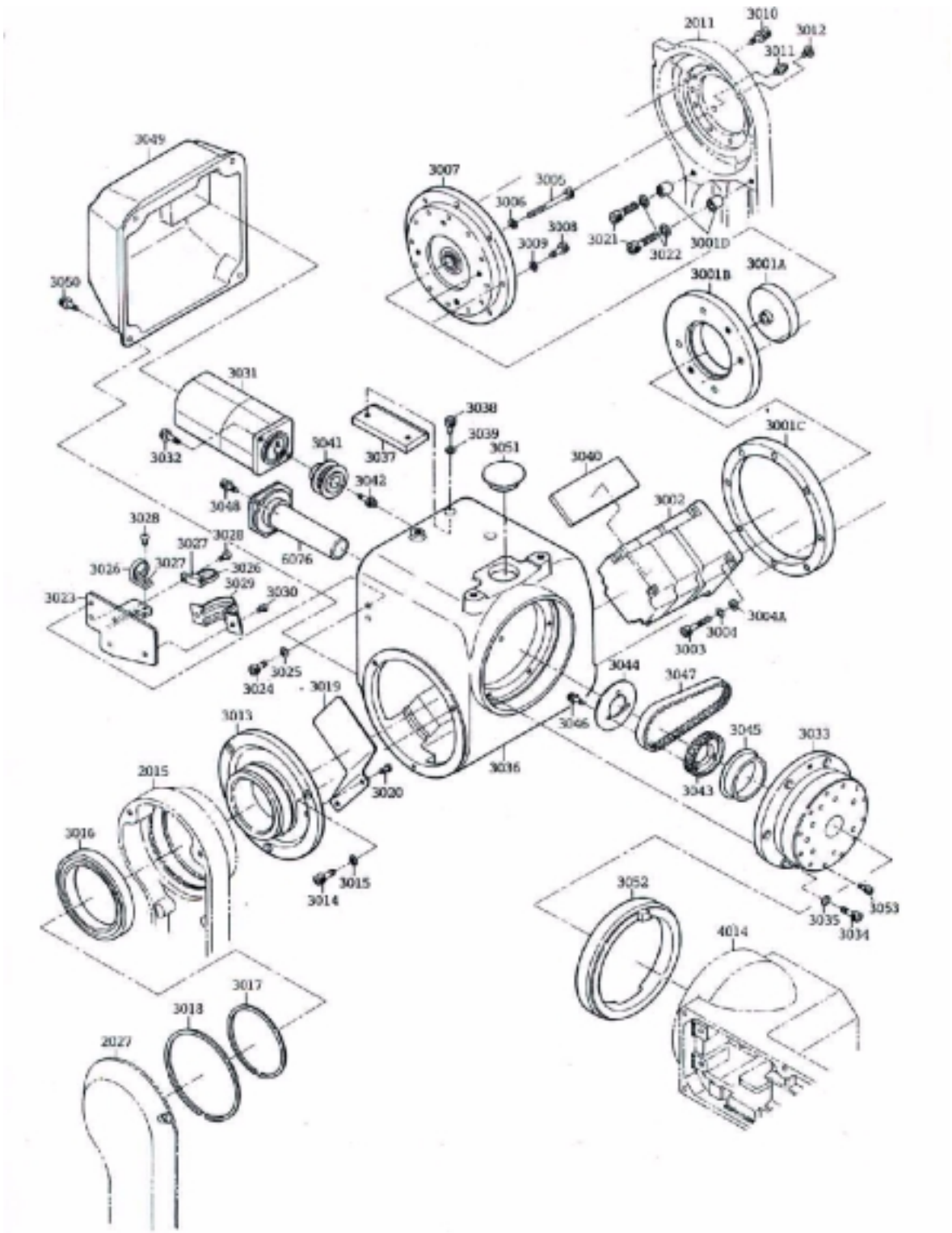

11.3 U,R-Axis Driving Unit

No.	DWG No.	Name	Pcs
2011	HW9100868-1	L arm A	1
2015	HW9100837-1	L arm B	1
2027	HW9200835-1	Cover	1
3001A	HW9404925-1	Fly wheel	1
3001B	HW9404926-1	Distance piece	1
3001C	HW9404927-1	Distance piece	1
3001D	HW9404930-1	Distance piece	1
3002	SGMPH-01A1A-YR11	Motor	1
3003	M5 × 25	Socket screw	4
3004	2H-5	Spring washer	4
3004A	MSRB5.5-2.0	washer	4
3005	M4 × 35	Socket screw	1
3006	2H-4	Spring washer	1
3007	HW9381285-A	RV reduction gear	1
3008	M4 × 20	Socket screw	8
3009	2H-4	Spring washer	8
3010	GT-LAM4 × 16	Socket screw	8
3011	A-MT6 × 1	G nipple	1
3012	LP-M5	Plug	1
3013	HW9301793-1	Shaft	1
3014	M4 × 12	Socket screw	3
3015	2H-4	Spring washer	3
3016	6812LLU	Bearing	1
3017	WR60	Clip	1
3018	AR78	Clip	1
3019	HW9404541-1	Guide	1
3020	M4 × 8	Round head screw	2
3021	M6 × 20	Socket screw	2
3022	2H-6	Spring washer	2
3023	HW9404660-1	Support	1
3024	M4 × 12	Socket screw	2
3025	2H-4	Spring washer	2
3026	T50R	Insulok'tie	2
3027	TA1-S8	Clamp	2
3028	M4 × 6	Round head screw	2
3029	CD-15	Saddle	1
3030	M5 × 6	Round head screw	2
3031	SGMAH-A5A2A-YR21	Motor	1
3032	GT-SAM3 × 12	Socket screw	2
3033	HW9381225-A	RV reduction gear	1
3034	M4 × 12	Socket screw	6
3035	2H-4	Spring washer	6
3036	HW9100804-1	Casing	1
3037	HW9404757-1	Block	1
3038	M4 × 12	Socket screw	2
3039	2H-4	Spring washer	2
3040	HW9481967-A	Sheet	1
3041	HW9481901-A	Pulley	1
3042	GT-SA M3 × 12	Socket screw	1
3043	HW9481902-A	Pulley	1
3044	HW9404536-1	Washer	1
3045	HW9404537-1	Flange	1
3046	GT-SA M3 × 12	Socket screw	3
3047	050S4 5M198	Timing belt	1
3048	GT-SAM4 × 10	Socket screw	2
3049	HW9200834-1	Cover	1
3050	GT-SA M4 × 10	Socket screw	4
3051	EZ5036AO	Cap	1
3052	HW9404539-1	Stopper	1
3053	M4 × 6	Socket screw	2
4014	HW9100842-1	U arm A	1
6076	HW9404538-A	Pipe	1

11.4 Wrist Unit

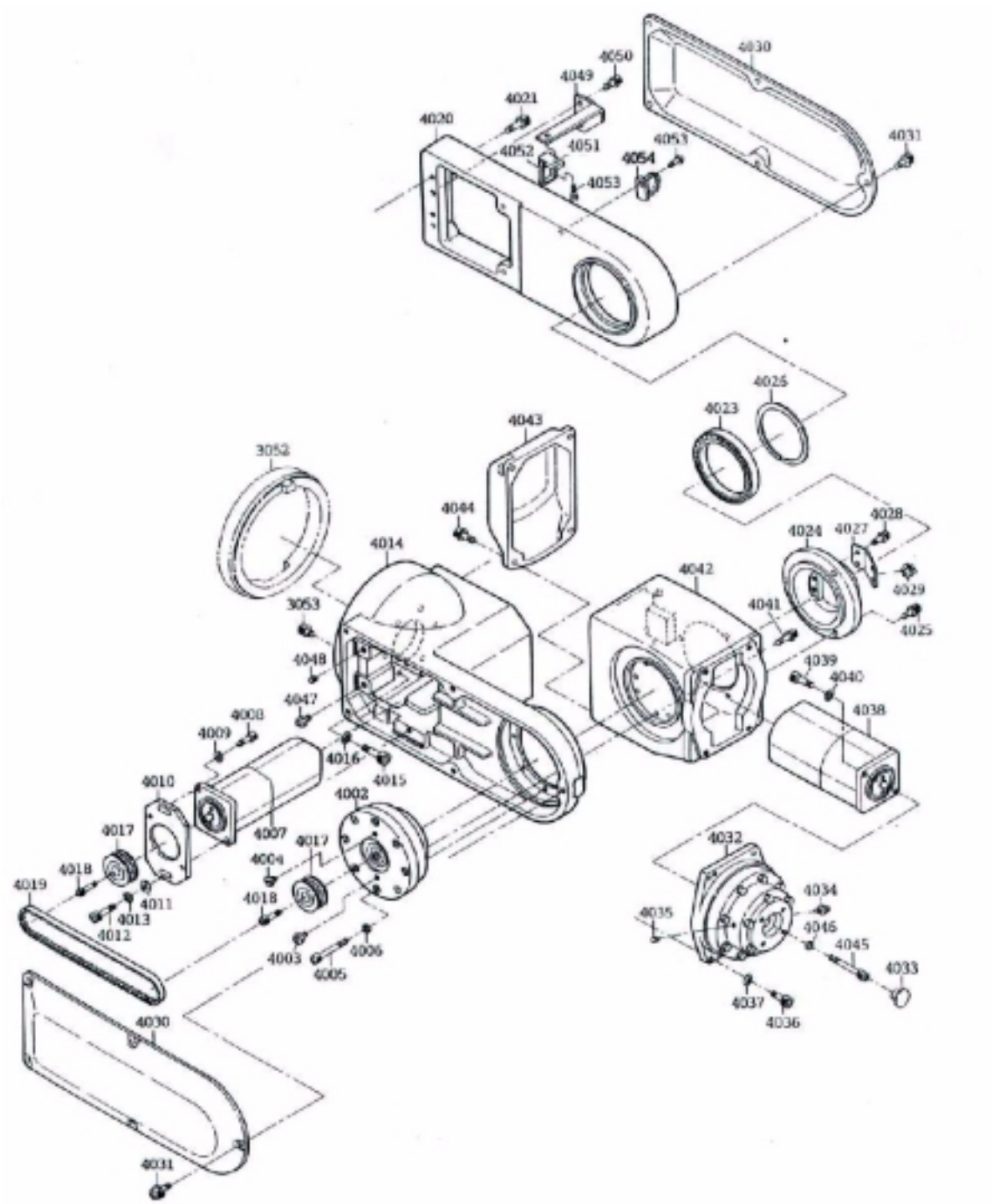

No.	DWG No.	Name	Pcs
3052	HW9404539-1	Stopper	1
3053	M4 × 6	Socket screw	2
4002	HW9381226-A	Reduction screw	1
4003	A-MT6 × 1	G nipple	1
4004	LP M5	Plug	1
4005	M3 × 25	Socket screw	8
4006	2H-3	Spring washer	8
4007	SGMAH-A5A1A-YR21	Motor	1
4008	M4 × 12	Socket screw	2
4009	2H-4	Spring washer	2
4010	HW9404521-1	M base	1
4011	M4	Washer	2
4012	M4 × 16	Socket screw	2
4013	2H-4	Spring washer	2
4014	HW9100842-1	U arm A	1
4015	M5 × 16	Socket screw	6
4016	2H-5	Spring washer	6
4017	HW9481900-A	Pulley	2
4018	GT-SA M3×12	Socket screw	1
4019	050S4.5M315	Timing belt	1
4020	HW9200833-1	U arm B	1
4021	GT-LA M4×16	Socket screw	4
4023	6809D	Bearing	1
4024	HW9301794-1	Shaft	1
4025	GT-SA M4×10	Socket screw	3
4026	ISTW-45	Clip	1
4027	HW9404520-1	Support	1
4028	GT-SA M4×10	Socket screw	2
4029	T30R	Insulok'tie	1
4030	HW9301798-1	Cover	2
4031	GT-SA M4×10	Socket screw	10
4032	HW9381227-A	Reduction gear	1
4033	EZ5002A0	Cap	1
4034	A-MT6 × 1	G nipple	1
4035	M6 × 6	H set screw	1
4036	M4 × 12	Socket screw	4
4037	2H-4	Spring washer	4
4038	SGMAH-A5A1A-YR21	Motor	1
4039	M4 × 12	Socket screw	2
4040	2H-4	Spring washer	2
4041	GT-LA M3 × 15	Socket screw	8
4042	HW9200925-1	Wrist base	1
4043	HW9301797-1	Cover	1
4044	GT-SAM4 × 10	Socket screw	4
4045	M3 × 30	Socket screw	1
4046	2H-3	Spring washer	1
4047	A-MT6 × 1	G nipple	1
4048	M6 × 6	H set screw	1
4049	HW9404701-1	Support	1
4050	GT-SA M4 × 10	Socket screw	2
4051	TA1-S8	Clamp	2
4052	T30R	Insulok'tie	2
4053	M4 × 8	Round head screw	2
4054	NK-9N	Clamp	1

MOTOMAN-SV3X
INSTRUCTIONS

TOKYO OFFICE
New Pier Takeshiba South Tower, 1-16-1, Kaigan, Minatoku, Tokyo 105-0022, Japan
Phone 81-3-5402-4511 Fax 81-3-5402-4580

MOTOMAN INC. HEADQUARTER
805 Liberty Lane West Carrollton, OH 45449, U.S.A.
Phone 1-937-847-6200 Fax 1-937-847-6277

MOTOMAN INC. TROY FACILITY
1050 S. Dorset, Troy, OH 45373, U.S.A.
Phone 1-937-440-2600 Fax 1-937-440-2626

MOTOMAN INC. COLUMBUS OFFICE
Dublin Tech Mart 5000 Blazer Memonal Parkway Dublin, OH 43017-3359, U.S.A.
Phone 1-614-718-4200 Fax 1-614-718-4222

YASKAWA ELECTRIC EUROPE GmbH
Am Kronberger Hang 2, 65824 Schwalbach,Germany.
Phone 49-6196-569-300 Fax 49-6196-888-301

Motoman Robotics AB
Box 504 S38525 Torsås, Sweden
Phone 46-486-48800 Fax 46-486-41410

Motoman Robotec GmbH
Kammerfeldstraβe1,85391 Allershausen, Germany
Phone 49-8166-900 Fax 49-8166-9039

YASKAWA ELECTRIC KOREA CORPORATION
Kfpa Bldg #1201, 35-4 Youido-dong, Yeongdungpo-Ku, Seoul 150-010, Korea
Phone 82-2-784-7844 Fax 82-2-784-8495

YASKAWA ELECTRIC (SINGAPORE) PTE. LTD.
151 Lorong Chuan, #04-01, New Tech Park Singapore 556741, Singapore
Phone 65-282-3003 Fax 65-289-3003

YATEC ENGINEERING CORPORATION
Shen Hsiang Tang Sung Chiang Building 10F 146 Sung Chiang Road, Taipei, Taiwan
Phone 886-2-2563-0010 Fax 886-2-2567-4677

BEIJING OFFIC
Room No. 301 Office Building of Beijing International Club, 21 Jianguomenwai Avenue, Beijing 100020, China
Phone 86-10-6532-1850 Fax 86-10-6532-1851

SHANGHAI OFFICE
27 Hui He Road Shanghai 200437 China
Phone 86-21-6553-6600 Fax 86-21-6531-4242

YASKAWA JASON (HK) COMPANY LIMITED
Rm. 2909-10, Hong Kong Plaza, 186-191 Connaught Road West, Hong Kong
Phone 852-2803-2385 Fax 852-2547-5773

TAIPEI OFFICE
Shen Hsiang Tang Sung Chiang Building 10F 146 Sung Chiang Road,Taipei, Taiwan
Phone 886-2-2563-0010 Fax 886-2-2567-4677

BEIJING YASKAWA BEIKE AUTOMATION ENGINEERING CO.,LTD.
30 XueYuan Road, Haidian, Beijing P.R. China Post Code: 100083
Phone 86-10-6233-2782 Fax 86-10-6232-1536

SHOUGANG MOTOMAN ROBOT CO., LTD.
7,Yongchang-North Street, Beijing Economic Technological Investment & Development Area,
Beijing 100076, P.R. China
Phone 86-10-6788-0551 Fax 86-10-6788-2878

YASKAWA ELECTRIC CORPORATION

YASKAWA

Specifications are subject to change without notice
for ongoing product modifications and improvements.

MANUAL NO. RE-MTO-A217 ①

© Printed in Japan August 1999 99-2

YASNAC XRC
INSTRUCTIONS

Upon receipt of the product and prior to initial operation, read these instructions thoroughly, and retain for future reference.

MOTOMAN INSTRUCTIONS

- MOTOMAN SETUP MANUAL
- MOTOMAN-□□□ INSTRUCTIONS
- YASNAC XRC INSTRUCTIONS
- YASNAC XRC OPERATOR'S MANUAL
- YASNAC XRC OPERATOR'S MANUAL for BEGINNERS

The YASNAC XRC operator's manuals above correspond to specific usage.
Be sure to use the appropriate manual.

YASKAWA

MANUAL NO. RE-CTO-A203 ◇2◇

MANDATORY

- This manual explains setup, diagnosis, maintenance, hardware and so on of the YASNAC XRC system. Read this manual carefully and be sure to understand its contents before handling the YASNAC XRC.

- General items related to safety are listed in the Setup Manual Section 1: Safety of Setup Manual. To ensure correct and safe operation, carefully read the Setup Manual before reading this manual.

CAUTION

- Some drawings in this manual are shown with the protective covers or shields removed for clarity. Be sure all covers and shields are replaced before operating this product.

- The drawings and photos in this manual are representative examples and differences may exist between them and the delivered product.

- YASKAWA may modify this model without notice when necessary due to product improvements, modifications, or changes in specifications. If such modification is made, the manual number will also be revised.

- If your copy of the manual is damaged or lost, contact a YASKAWA representative to order a new copy. The representatives are listed on the back cover. Be sure to tell the representative the manual number listed on the front cover.

- YASKAWA is not responsible for incidents arising from unauthorized modification of its products. Unauthorized modification voids your product's warranty.

NOTES FOR SAFE OPERATION

Read this manual carefully before installation, operation, maintenance, or inspection of the YASNAC XRC.

In this manual, the Notes for Safe Operation are classified as “WARNING”, “CAUTION”, “MANDATORY”, or ”PROHIBITED”.

WARNING	Indicates a potentially hazardous situation which, if not avoided, could result in death or serious injury to personnel.
CAUTION	Indicates a potentially hazardous situation which, if not avoided, could result in minor or moderate injury to personnel and damage to equipment. It may also be used to alert against unsafe practices.
MANDATORY	Always be sure to follow explicitly the items listed under this heading.
PROHIBITED	Must never be performed.

Even items described as “CAUTION” may result in a serious accident in some situations. At any rate, be sure to follow these important items.

NOTE

To ensure safe and efficient operation at all times, be sure to follow all instructions, even if not designated as “CAUTION” and “WARNING”.

WARNING

- Before operating the manipulator, check that servo power is turned off when the emergency stop buttons on the playback panel or programming pendant are pressed.
  When the servo power is turned off, the SERVO ON READY lamp on the playback panel and the SERVO ON LED on the programming pendant are turned off.

  Injury or damage to machinery may result if the emergency stop circuit cannot stop the manipulator during an emergency. The manipulator should not be used if the emergency stop buttons do not function.

  Emergency Stop Button

- Once the emergency stop button is released, clear the cell of all items which could interfere with the operation of the manipulator. Then turn the servo power ON.

  Injury may result from unintentional or unexpected manipulator motion.

  Release of Emergency Sto 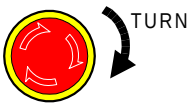

- Always set the Teach Lock before entering the robot work envelope to teach a job.

  Operator injury can occur if the Teach Lock is not set and the manipulator is started from the playback panel.

- Observe the following precautions when performing teaching operations within the working envelope of the manipulator :
  - View the manipulator from the front whenever possible.
  - Always follow the predetermined operating procedure.
  - Ensure that you have a safe place to retreat in case of emergency.

  Improper or unintended manipulator operation may result in injury.

- Confirm that no persons are present in the manipulator's work envelope and that you are in a safe location before:
  - Turning on the YASNAC XRC power
  - Moving the manipulator with the programming pendant
  - Running check operations
  - Performing automatic operations

  Injury may result if anyone enters the working envelope of the manipulator during operation. Always press an emergency stop button immediately if there are problems.The emergency stop button is located on the right side of both the YASNAC XRC playback panel and programming pendant.

CAUTION

- Perform the following inspection procedures prior to conducting manipulator teaching. If problems are found, repair them immediately, and be sure that all other necessary processing has been performed.
  -Check for problems in manipulator movement.
  -Check for damage to insulation and sheathing of external wires.

- Always return the programming pendant to the hook on the XRC cabinet after use.

  The programming pendant can be damaged if it is left in the manipulator's work area, on the floor, or near fixtures.

- Read and understand the Explanation of the Alarm Display in the Setup Manual before operating the manipulator.

Definition of Terms Used Often in This Manual

The MOTOMAN manipulator is the YASKAWA industrial robot product.
The manipulator usually consists of the controller, the playback panel, the programming pendant, and supply cables.
IIn this manual, the equipment is designated as follows.

Equipment	Manual Designation
YASNAC XRC Controller	XRC
YASNAC XRC Playback Panel	Playback Panel
YASNAC XRC Programming Pendant	Programming Pendant

Descriptions of the programming pendant and playback panel keys, buttons, and displays are shown as follows:

Equipment		Manual Designation
Programming Pendant	Character Keys	The keys which have characters printed on them are denoted with [ ]. ex. [ENTER]
	Symbol Keys	The keys which have a symbol printed on them are not denoted with [ ] but depicted with a small picture. ex. page ke The cursor key is an exception, and a picture is not shown.
	Axis Keys Number Keys	“Axis Keys” and “Number Keys” are generic names for the keys for axis operation and number input.
	Keys pressed simultaneously	When two keys are to be pressed simultaneously, the keys are shown with a “+” sign between them, ex. [SHIFT]+[COORD]
	Displays	The menu displayed in the programming pendant is denoted with { }. ex. {JOB}
Playback Panel	Buttons	Playback panel buttons are enclosed in brackets. ex. [TEACH] on the playback panel

Description of the Operation Procedure

In the explanation of the operation procedure, the expression "Select • • • " means that the cursor is moved to the object item and the SELECT key is pressed.

Setup • Diagnosis 15

1 Outline of Setting and Diagnosis

2 Security System

2.1 Protection Through Security Mode Settings 2-1
2.1.1 Security Mode 2-1
■ Modification of Security Mode 2-5
2.1.2 User ID. 2-6
■ Changing a User ID 2-6

3 System Setup

3.1 Home Position Calibration 3-1
3.1.1 Home Position Calibration 3-2
3.1.2 Calibrating Operation. 3-3
■ Registering All Axes at On Time 3-3
■ Registering Individual Axes. 3-4
■ Changing the Absolute Data 3-5
■ Clearing Absolute Data 3-6
3.1.3 Home Position of the Robot. 3-7
3.2 Specified Point 3-8
3.2.1 Purpose of Position Check Operation 3-10
3.2.2 Specified Point Setting. 3-11
3.2.3 Procedure After an Alarm 3-12
3.3 Setting the Controller Clock. 3-13
3.4 Setting Play Speed 3-14
3.5 All Limits Releasing 3-16
3.6 Overrun / Shock Sensor Releasing 3-18
3.7 Interference Area. 3-19
3.7.1 Interference Area. 3-19
3.7.2 Cubic Interference Area. 3-20
■ Cubic Interference Area 3-20
■ Setting Method 3-20
■ Setting Operation 3-21
3.7.3 Axis Interference Area 3-26
■ Axis Interference Area 3-26
■ Setting Operation 3-26
3.7.4 Clearing Interference Area Data 3-29
3.8 Operation Origin Point Setting 3-30
3.8.1 What is the Operation Origin Point? 3-30
3.8.2 Setting Operation Origin Point. 3-30
■ Operation Origin Point Display 3-30
■ Registering/Changing the Operation Origin Point. 3-30
■ Returning to the Operation Origin Point 3-31
■ Output of the Operation Origin Point Signal 3-31

3.9 Tool Data Setting 3-32
3.9.1 Registering Tool Files 3-32
■ Number of Tool Files 3-32
■ Registering Coordinate Data 3-32
■ Registering Tool Pose 3-34
■ Setting the Tool Load Information 3-35
3.9.2 Tool Calibration 3-36
■ Tool Calibration 3-36
■ Teaching 3-36
■ Clearing Calibration Data 3-39
■ Checking the Tool Center Point 3-40
3.9.3 Automatic Measurement of the Tool Load and the Center of Gravity 3-41
■ What is the Automatic Measurement of the Tool Load and the Center of Gravity? 3-41
■ Measurement of the Tool Load and the Center of Gravity 3-41
3.10 User Coordinates Setting 3-45
3.10.1 User Coordinates 3-45
■ Definition of User Coordinates 3-45
■ User Coordinates File 3-45
3.10.2 User Coordinates Setting 3-46
■ Selecting User Coordinates File. 3-46
■ Teaching User Coordinates 3-47
■ Clearing User Coordinates. 3-48
3.11 ARM Control 3-49
3.11.1 ARM Control 3-49
3.11.2 ARM CONTROL Display 3-49
■ Robot Setup Condition 3-50
■ Setting 3-52
3.11.3 Tool Load Information Setting 3-53
■ Tool Load Information 3-54
■ How to Calculate Tool Load Information 3-54
■ Tool load Information registering 3-61
3.12 Shock Detection Function 3-64
3.12.1 Shock Detection Function. 3-64
3.12.2 Shock Detection Function Setting 3-64
■ Shock Detection Level Setting 3-64
■ Tool load Information Setting 3-67
■ Instruction of Shock Detection Function. 3-68
■ Reset Shock detected 3-73
3.12.3 Alarm List 3-74
3.13 Instruction Level Setting 3-75
3.13.1 Setting Contents 3-75
■ Instruction Set 3-75
■ Learning Function 3-76
3.13.2 Setting Instruction Set Level Operation 3-76

3.14 Number Key Customize Function 3-77
3.14.1 What is the Number Key Customize Function? 3-77
3.14.2 Allocatable Functions 3-77
■ Key Allocation (EACH) 3-78
■ Key Allocation (SIM) 3-78
3.14.3 Allocating an Operation 3-79
■ Allocation Display 3-79
■ Instruction Allocation 3-80
■ Job Call Allocation 3-81
■ Display Allocation 3-82
■ Alternate Output Allocation 3-83
■ Momentary Output Allocation 3-83
■ Pulse Output Allocation 3-84
■ Group (4-bit/8-bit) Output Allocation 3-85
■ Analog Output Allocation 3-85
■ Analog Incremental Output Allocation 3-86
3.14.4 Allocation of I/O Control Instructions 3-86
3.14.5 Execution of Allocation 3-88
■ Executing the Instruction/Output Control Allocation 3-88
■ Executing the Job Call Allocation 3-88
■ Executing the Display Allocation 3-88
■ Executing the I/O Control Allocation 3-88
3.15 Changing the Output Status 3-89
3.16 Temporary Release of Soft Limits 3-91
3.17 File Initialize 3-93
3.17.1 Initialize Job File 3-93
3.17.2 Initialize Data File 3-94
3.17.3 Initialize Parameter File 3-95
3.17.4 Initializing I/O Data 3-96
3.17.5 Initializing System Data 3-97

4 Modification of System Configuration
4.1 Addition of I/O Modules 4-1
4.2 Addition of Base and Station Axis 4-3
4.2.1 Base Axis Setting 4-5
4.2.2 Station Axis Setting 4-13

5 System Diagnosis

5.1 System Version 5-1

5.2 Input/Output Status 5-1

5.2.1 Universal Input 5-1

■ Universal Input Display 5-1

■ Universal Input Detailed Display 5-2

5.2.2 Universal Output 5-2

■ Universal Output Display 5-2

■ Universal Output Detailed Display 5-3

■ Modify the Output Status 5-3

■ Modify the Signal Name 5-4

■ Search the Signal Number 5-6

5.2.3 Specific Input 5-8

■ Specific Input Display 5-8

■ Specific Input Detailed Display 5-8

5.2.4 Specific Output 5-9

■ Specific Output Display 5-9

■ Specific Output Detailed Display 5-9

5.2.5 RIN INPUT 5-10

■ RIN INPUT Display 5-10

5.3 System Monitoring Time 5-11

5.3.1 System Monitoring Time Display 5-11

5.3.2 Individual Display of the System Monitoring Time 5-12

5.3.3 Clearing the System Monitoring Time 5-13

5.4 Alarm History 5-14

5.4.1 Alarm History Display 5-14

5.4.2 Clearing the Alarm History 5-14

5.5 I/O Message History 5-15

5.5.1 I/O Message History Display 5-15

■ Search 5-16

5.5.2 Clearing the I/O Message History 5-16

5.6 Position Data When Power is Turned ON/OFF 5-17

5.6.1 Power ON/OFF Position Display 5-17

Hardware 19

6 YASNAC XRC Specification

6.1 Specification List 6-3
6.2 Function List 6-4
6.3 Programming Pendant. 6-5
6.4 Equipment Configuration 6-6
6.4.1 Arrangement of Units and Circuit Boards 6-6
■ Configuration. 6-6
■ Location 6-8
6.4.2 Cooling System of the Controller Interior 6-8

7 Description of Units and Circuit Boards

7.1 Power Supply Unit. 7-2
7.2 CPU Rack. 7-4
7.2.1 CPU Rack Configuration 7-4
7.2.2 Circuit Board in the CPU Rack 7-4
■ System Control Circuit Board (JANCD-XCP01) 7-4
■ Control Power Supply Unit (CPS-150F) 7-4
■ WAGO Connector. 7-6
7.3 I/O Contactor Unit 7-7
7.3.1 Specific Input Circuit Board (JANCD-XIO01). 7-8
■ Safety Plug Input Signal 7-11
7.3.2 General I/O Circuit Board (JANCD-XIO02). 7-12
■ Connection wire with General I/O (CN10, 11, 12, 13). 7-13
■ Specific I/O Signal Related to Start and Stop 7-14
7.3.3 Power-on Circuit Board (JANCD-XTU01) 7-15
■ Connection of Shock Sensor 7-15
■ Connection of External Power Supply for I/O 7-16
■ Method of connecting external axis overrun signal. 7-18
7.4 Servopack. 7-19
7.4.1 Servopack Configuration 7-19
7.4.2 Description of Each Unit 7-23
■ Servo Control Circuit board (JASP-WRCA01) 7-23
■ Servo Control Power Supply (JUSP-RCP01AAB) 7-23
■ Converter 7-23
■ Amplifier 7-23
7.5 General I/O Signal Assignment 7-24
7.5.1 Arc Welding 7-24
7.5.2 Handling. 7-30
7.5.3 General Application 7-36
7.5.4 Spot Welding 7-42
7.5.5 JANCD-XEW01 Circuit Board 7-50
■ Arc Welding Application 7-50

Maintenance 51

8 Inspections

8.1 Regular Inspections 8-1
8.2 XRC Inspections 8-2
8.2.1 Checking if the Doors are Firmly Closed. 8-2
8.2.2 Checking for Gaps or Damage in the Sealed Construction Section . . 8-2
8.3 Cooling Fan Inspections 8-3
8.4 Emergency Stop Button Inspections 8-4
8.5 Deadman Switch Inspections. 8-4
8.6 Battery Inspections. 8-5
8.7 Power Supply Voltage Confirmation 8-6
8.8 Open Phase Check 8-7

9 Replacing Parts

9.1 Replacing XRC Parts 9-1
9.1.1 Replacing Parts of the CPU Rack. 9-2
■ Replacing the Battery. 9-2
■ Replacing the JANCD-XCP01 Circuit Board 9-3
■ Replacing the Control Power Unit (CPS-150F). 9-4
9.1.2 Replacing the Servopack 9-5
9.1.3 Replacing the parts of I/O Power-on Unit 9-8
■ Checking and Replacing Fuses 9-8
9.2 YASNAC XRC Parts List 9-9
9.3 Supplied Parts List 9-12
9.4 Recommended Spare Parts 9-12

Alarm • Error 21

10 Alarm

10.1 Outline of Alarm 10-1

10.2 Alarm Display 10-2

10.2.1 Displaying/Releasing Alarm 10-2

10.2.2 Special Alarm Display 10-3

10.3 Alarm Message List 10-5

10.4 I/O Alarm Message List 10-51

- Arc Welding Application 10-51
- Handling Application 10-52
- Spot Welding Application 10-53
- General Application 10-54

11 Error

11.1 Error Message List 11-1

11.1.1 System and General Operation 11-2

11.1.2 Editing 11-6

11.1.3 Job Defined Data 11-6

11.1.4 External Memory Equipment 11-10

11.1.5 Concurrent I/O 11-16

11.1.6 Maintenance Mode 11-17

Setup • Diagnosis

1 Outline of Setting and Diagnosis

WARNING

- Various settings control system compatibility and manipulator performance characteristics. Exercise caution when changing settings that can result in improper manipulator operation. Personal injury and/or equipment damage may result if incorrect settings are applied by the user.

- Observe the following precautions to safeguard system settings:

  - Maintain supervisory control of user functions.
  - Retain floppy disk backups of control settings each time settings are changed.

The XRC controller for the Motoman industrial robot provides a full range of advanced and practical functions. It can meet the industry demands for more flexible and more sophisticated robotics systems. The following must be performed to create a more powerful system.

- Home Position Calibration
- Second Home Position
- IO Status Display
- Time Setting

Making these settings optimizes the system to perform to its maximum potential in the chosen application.

NOTE These functions can be operated in the teach mode.

2 Security System

2.1 Protection Through Security Mode Settings

The XRC modes setting are protected by a security system. The system allows operation and modification of settings according to operator clearance. Be sure operators have the correct level of training for each level to which they are granted access.

2.1.1 Security Mode

There are three security modes. Editing mode and management mode require a user ID. The user ID consists of numbers and letters, and contains no less than 4 and no more than 8 characters. (Significant numbers and signs: ”0 to 9”, “-”, “.”.

Security Mode Descriptions

Security Mode	Explanation
Operation Mode	This mode allows basic operation of the robot (stopping, starting, etc.) for people operating the robot work on the line.
Editing Mode	This mode allows the operator to teach and edit jobs and robot settings.
Management Mode	This mode allows those authorized to set up and maintain robot system: parameters, system time and modifying user IDs.

Menu & Security Mode

Top Menu	Sub Menu	Allowed Security Mode	
		DISPLAY	EDIT
JOB	JOB	Operation	Edit
	SELECT JOB	Operation	Operation
	CREATE NEW JOB	Edit	Edit
	MASTER JOB	Operation	Edit
	JOB CAPACITY	Operation	-
VARIABLE	BYTE	Operation	Edit
	INTEGER	Operation	Edit
	DOUBLE	Operation	Edit
	REAL	Operation	Edit
	POSITION (ROBOT)	Operation	Edit
	POSITION (BASE)	Operation	Edit
	POSITION (ST)	Operation	Edit
IN/OUT	EXTERNAL INPUT	Operation	-
	EXTERNAL OUTPUT	Operation	-
	UNIVERSAL INPUT	Operation	-
	UNIVERSAL OUTPUT	Operation	-
	SPECIFIC INPUT	Edit	-
	SPECIFIC OUTPUT	Edit	-
	RIN	Edit	-
	REGISTER	Edit	-
	AUXILIARY RELAY	Edit	-
	CONTROL INPUT	Edit	-
	ANALOG OUTPUT	Edit	-
	SV POWER STATUS	Edit	-
	LADDER PROGRAM	Management	Management
	I/O ALARM	Management	Management
	I/O MESSAGE	Management	Management

Menu & Security Mode

Top Menu	Sub Menu	Allowed Security Mode	
		DISPLA	EDIT
ROBOT	CURRENT POSITION	Operation	-
	COMMAND POSITION	Operation	-
	SERVO MONITOR	Management	-
	OPE ORIGIN POS	Operation	Edit
	SECOND HOME POS	Operation	Edit
	DROP AMOUNT	Management	Management
	POWER ON/OFF POS	Operation	-
	TOOL	Edit	Edit
	INTERFERENCE	Management	Management
	USER COORDINATE	Edit	Edit
	HOME POSITION	Management	Management
	MANIPULATOR TYPE	Management	-
	ANALOG MONITOR	Management	Management
	OVERRUN&S-SENSOR	Edit	Edit
	LIMIT RELEASE	Edit	Management
	ARM CONTROL	Management	Management
SYSTEM INFO	MONITORING TIME	Operation	Management
	ALARM HISTOR	Operation	Management
	I/O MSG HISTORY	Operation	Management
	VERSION	Operation	-
FD/PC CAR	LOAD	Edit	-
	SAVE	Operation	-
	VERIFY	Operation	-
	DELETE	Operation	-
	FORMAT	Operation	Operation
	DEVICE	Operation	Operation

Menu & Security Mode

Top Menu	Sub Menu	Allowed Security Mode	
		DISPLA	EDIT
PARAMETER	S1CxG	Management	Management
	S2C	Management	Management
	S3C	Management	Management
	S4C	Management	Management
	A1P	Management	Management
	A2P	Management	Management
	A3P	Management	Management
	RS	Management	Management
	S1E	Management	Management
	S2E	Management	Management
	S3E	Management	Management
	S4E	Management	Management
SETUP	TEACHING COND	Edit	Edit
	OPERATE COND	Management	Management
	DATE/TIME	Management	Management
	GRP COMBINATION	Management	Management
	SET WORD	Edit	Edit
	RESERVE JOB NAME	Edit	Edit
	USER ID	Edit	Edit
	SET SPEED	Management	Management

■ Modification of Security Mode

Operation

Select {SECURITY} under the top menu*1 ➡ Select the desired mode *2 ➡ Input the user ID ➡ Press [ENTER] *3

Explanation

***1** The current security mode is displayed in menu title of the top menu.

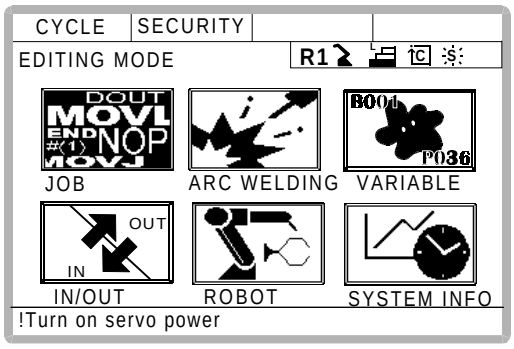

***2** When the selected security mode is a higher level than the current settings, a user ID must be input.

.

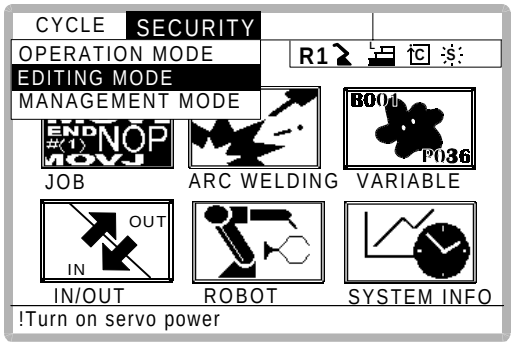

SUPPLE-MENT

At the factory, the following below user ID number is preset.
- Editing Mode:[00000000]
- Management Mode:[99999999]

***3** The input user ID is compared with the user ID of the selected security mode. When the correct user ID is entered, the operation mode is changed.

2.1.2 User ID

User ID is requested when Editing Mode or Management Mode is operated.
User ID must be between 4 characters and 8, and they must be numbers and symbols (“0~9”,“-” and “.”).

■ Changing a User I

In order to change the user ID, the XRC must be in Editing Mode or Management Mode.
Higher security modes can make changes to lower security modes.

Operation

Select {SETUP} under the top menu ➡ Select {USER ID}*1 ➡ Select the desired ID*2 ➡ Input current ID and press [Enter]*3 ➡ Input new ID and press [Enter]*4

Explanation

***1** User ID registration display is shown.

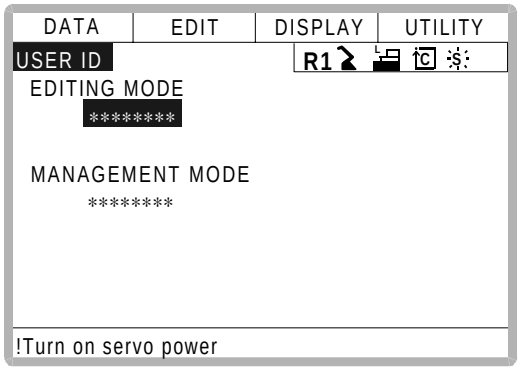

***2** The character input line is displayed, and the message "Input current ID no. (4 to 8 digits)” is displayed.

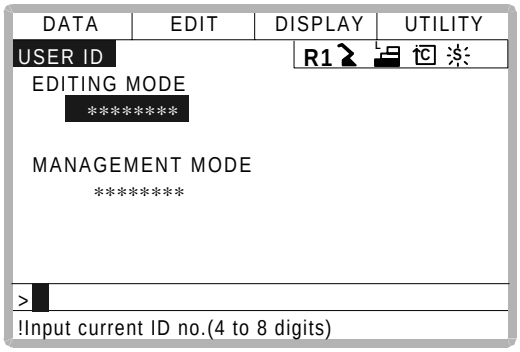

***3** When the correct user ID is entered, a new ID is requested to be input. "Input new ID no.(4 to 8 digits)" is displayed.

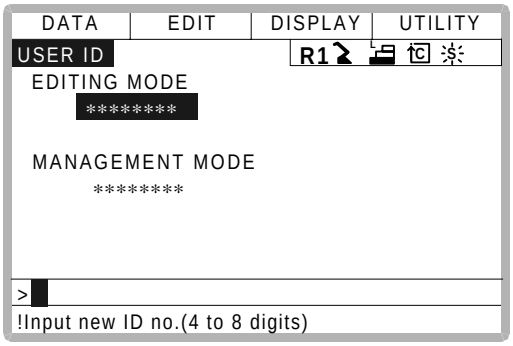

***4** User ID is changed.

3 System Setup

3.1 Home Position Calibration

WARNING

- Before operating the manipulator, check that the SERVO ON lamp goes out when the emergency stop buttons on the playback panel and programming pendant are pressed.

  Injury or damage to machinery may result if the manipulator cannot be stopped in case of an emergency.

- Always set the teach lock before starting to teach.

  Failure to observe this warning may result in injury when operating the playback panel.

- Observe the following precautions when performing teaching operations within the working envelope of the manipulator:

  - View the manipulator from the front whenever possible.
  - Always follow the predetermined operating procedure.
  - Ensure that you have a safe place to retreat in case of emergency.

  Improper or unintended manipulator operation may result in injury.

- Prior to performing the following operations, be sure that no one is in the working envelope of the manipulator, and be sure that you are in a safe place when:

  - Turning the power on to the XRC.
  - Moving the manipulator with the programming pendant.
  - Running check operations.
  - Performing automatic operations.

  Injury may result from contact with the manipulator if persons enter the working envelope of the manipulator.

- Always press the emergency stop button immediately if there are problems.
  Emergency stop buttons are located at the upper right corner of the XRC playback panel and on the upper right of the programming pendant.

CAUTION

- Perform the following inspection procedures prior to teaching the manipulator. If problems are found, correct them immediately, and be sure that all other necessary tasks have been performed.

  - Check for problems in manipulator movement.
  - Check for damage to the insulation and sheathing of external wires.
  - Always return the programming pendant to its hook on the XRC cabinet after use.

  If the programming pendant is inadvertently left on the manipulator, a fixture, or on the floor, the manipulator or a tool could collide with it during manipulator movement, possibly causing injury or equipment damage.

3.1.1 Home Position Calibration

NOTE Teaching and playback are not possible before home position calibration is complete. In a system with two or more manipulators, the home position of all the manipulators must be calibrated before starting teaching or playback.

Home position calibration is an operation in which the home position and encoder zero position coincide. Although this operation is performed prior to shipment at the factory, the following cases require this operation to be performed again.

- Change in the combination of the manipulator and XRC
- Replacement of the motor or encoder
- Clearing stored memory (by replacement of XCP01 board, weak battery, etc.)
- Home position deviation caused by hitting the manipulator against a workpiece, etc.

To calibrate the home position, move the manipulator to the home position using the axis keys. There are two operations for home position calibration:

- All the axes can be moved at the same time
- Axes can be moved individually

If the absolute data of the home position is already known, set the absolute data again after completing home position registration.

SUPPLE-MENT

Home Position

The home position is the pulse value "0" for each axis. The relative values between the home position and the geometry position are set to parameters. The relative values are specified as an angle in units of 1/1000°, and vary for different manipulator types. See " 3.1.3 Home Position of the Robot ".

3.1.2 Calibrating Operation

■ Registering All Axes at On Time

Operation

Select {ROBOT} under the top menu ➡ Select {HOME POSITION}*1 ➡ Select {DISPLAY} under the menu*2 ➡ Select the desired control group ➡ Select {EDIT} under the menu*3 ➡ Select {SELECT ALL AXES} *4 ➡ Select "YES" *5

Explanation

***1** The home position calibration display is shown.

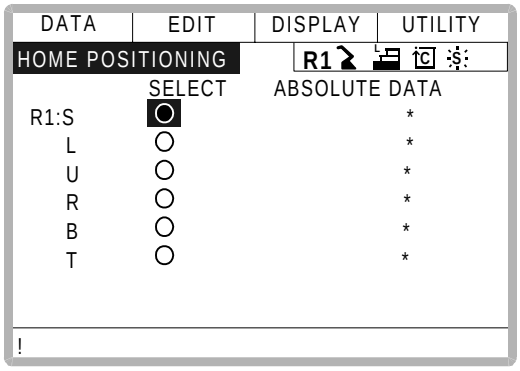

***2** The pull down menu appears.

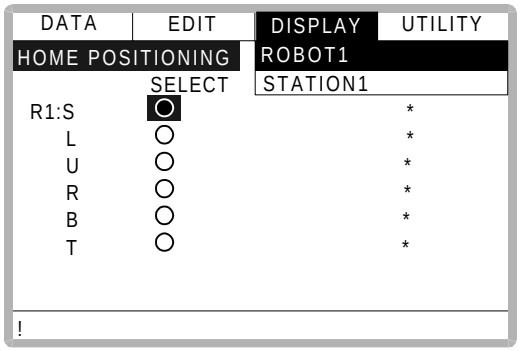

***3** The pull down menu appears.

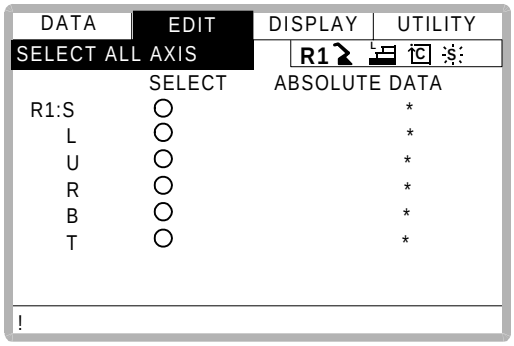

***4** The confirmation dialog is displayed.

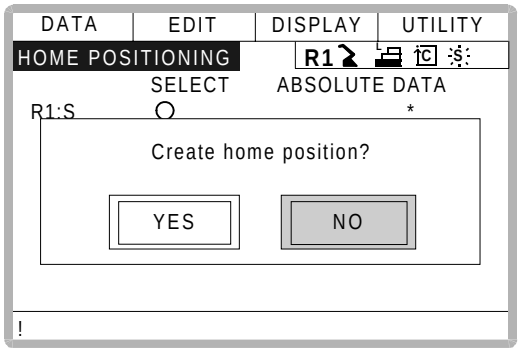

***5** Displayed position data of all axes are registered as home position.
When “NO” is selected, the registration will be canceled.

■ Registering Individual Axes

Operation

Select {ROBOT} under the top menu ➡ Select {HOME POSITION} ➡ Select {DISPLAY} under the menu ➡ Select the desired control group*1 ➡Select the axis to be registered*2 ➡Select “YES” *3

Explanation

***1** In the same way shown in Explanation *1,*2 in ”Registering all axes at once”, the home calibration display and select control group are shown.

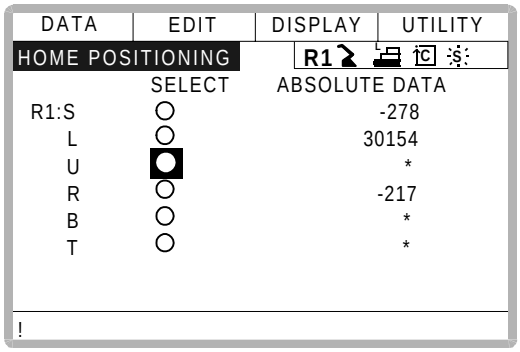

***2** The confirmation dialog is displayed.

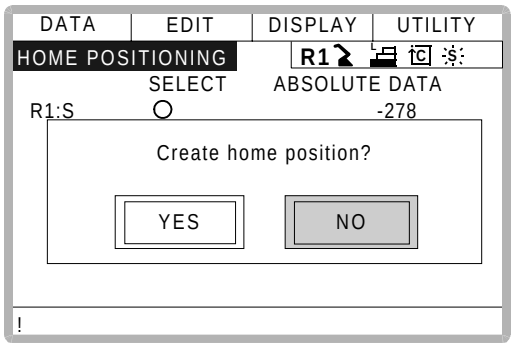

***3** Displayed position data of axis are registered as home position.
When “NO” is selected, the registration will be canceled.

■ Changing the Absolute Data

To change the absolute data of the axis when home position calibration is completed, perform the following:

Operation

Select {ROBOT} under the top menu ➡ Select {HOME POSITION} ➡ Select {DISPLAY} ➡ Select the desired control group *1 ➡ Select the absolute data to be registered*2 ➡ Enter the absolute data using the number keys ➡ Press [ENTER] *3

Explanation

***1** By the same way shown in Explanation *1,*2 in ”Registering all axes at once”, the home calibration display and select control group are shown.

***2** The number input buffer line is shown.

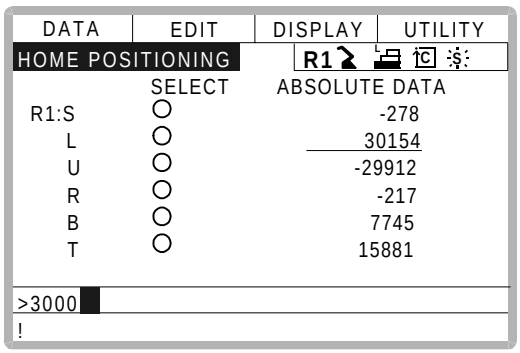

***3** Absolute data are modified.

■ Clearing Absolute Data

Operation

Select {ROBOT} under the top menu ➡ Select {HOME POSITION}*1 ➡ Select {DATA} under the menu ➡ Select {CLEAR ALL DATA}*2

Explanation

***1** In the same way shown in Explanation *1,*2 in ”Registering all axes at once”, the home calibration display and select control group are shown.

***2** The all absolute data are cleared.

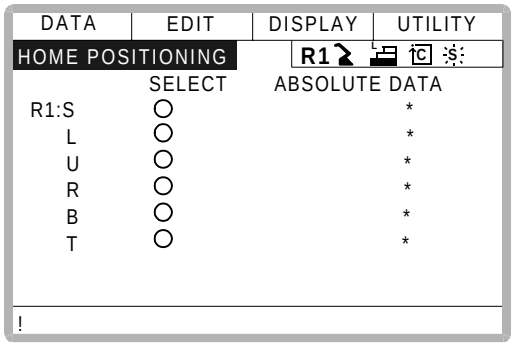

3.1.3 Home Position of the Robot

In case of UP6, the home position are as follows.

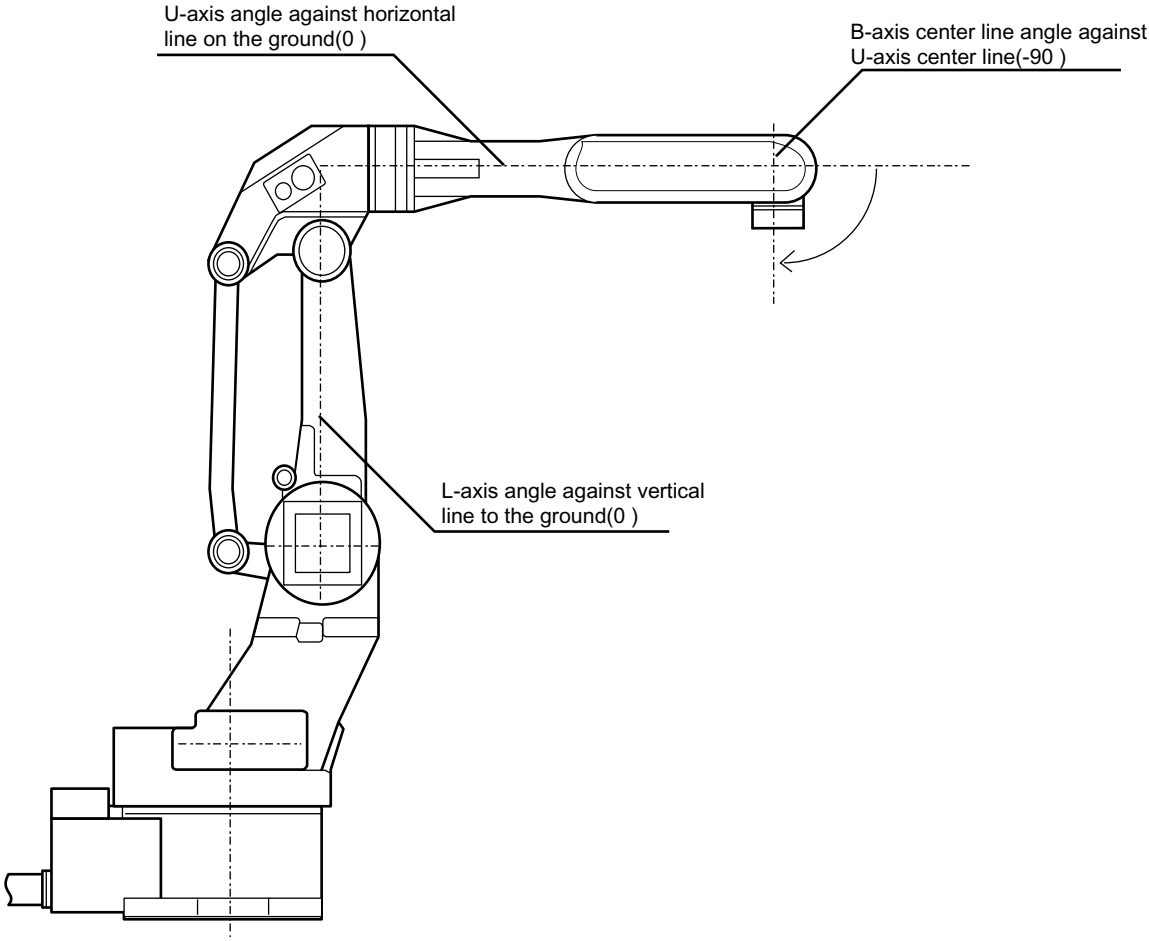

NOTE Other manipulator models have different positions. Always consult the documentation for the correct manipulator model.

3.2 Specified Point

WARNING

- Be aware of safety hazards when performing the position confirmation of the specified point.

  Abnormality of the PG system may be a cause for alarm. The manipulator may operate in an unexpected manner, and there is a risk of damage to equipment or injury to personnel.

- Before operating the manipulator, check that the SERVO ON lamp goes out when the emergency stop buttons on the playback panel and programming pendant are pressed.

  Injury or damage to machinery may result if the manipulator cannot be stopped in case of an emergency.

- Always set the teach lock before starting to teach.

  Failure to observe this warning may result in injury when operating the playback panel.

- Observe the following precautions when performing teaching operations within the working envelope of the manipulator:

  - View the manipulator from the front whenever possible.
  - Always follow the predetermined operating procedure.
  - Ensure that you have a safe place to retreat in case of emergency.

  Improper or unintended manipulator operation may result in injury.

- Prior to performing the following operations, be sure that no one is in the working envelope of the manipulator, and be sure that you are in a safe place when:

  - Turning the power on to the XRC.
  - Moving the manipulator with the programming pendant.
  - Running check operations.
  - Performing automatic operations.

  Injury may result from contact with the manipulator if persons enter the working envelope of the manipulator.

- Always press the emergency stop button immediately if there are problems.

  Emergency stop buttons are located at the upper right corner of the XRC playback panel and at the upper right of the programming pendant.

CAUTION

- Perform the following inspection procedures prior to teaching the manipulator. If problems are found, correct them immediately, and be sure that all other necessary tasks have been performed.

  - Check for problems in manipulator movement.
  - Check for damage to the insulation and sheathing of external wires.
  - Always return the programming pendant to its hook on the XRC cabinet after use.

  If the programming pendant is inadvertently left on the manipulator, a fixture, or on the floor, the manipulator or a tool could collide with it during manipulator movement, possibly causing injury or equipment damage.

3.2.1 Purpose of Position Check Operation

If the absolute number of rotation detected at power on does not match the data stored in the absolute encoder the last time the power was turned off, an alarm is issued when the controller power is turned on.
There are two possible causes of this alarm:

- Error in the PG system
- The manipulator was moved after the power was turned OFF.

If there is an error with the PG system, the manipulator may stall when playback is started. If the absolute data allowable range error alarm has occurred, playback and test runs will not function and the position must be checked.

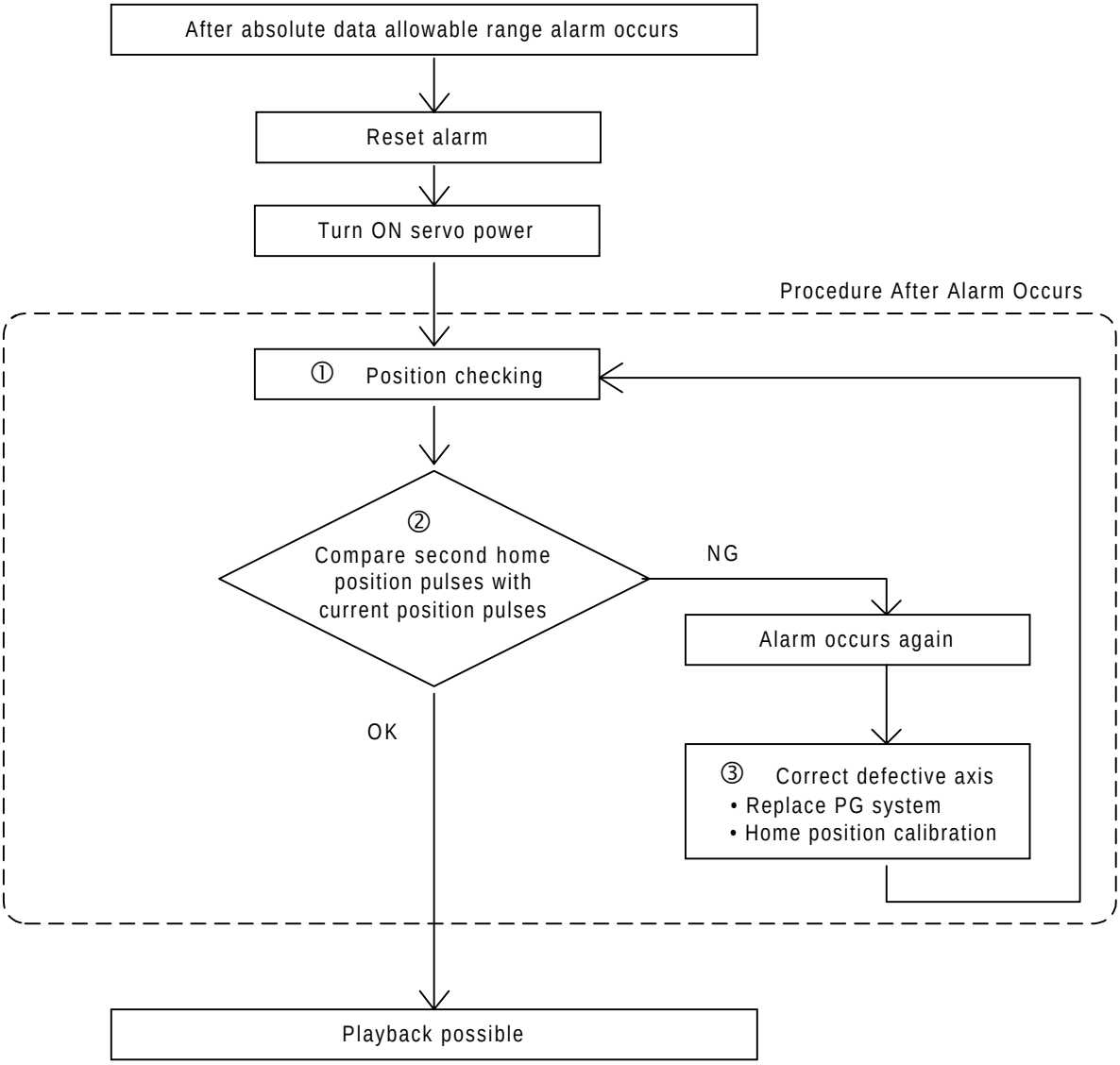

①Position Check

If the absolute data allowable range alarm occurs, move to the specified point using the axis keys and check the position. Playback, test runs, and other operation will not function.

②Pulse Difference Check

The pulse number at the specified point is compared with that at the current position. If the difference is within the allowable range, playback is enabled. If not, the error alarm occurs again.

- The allowable range is the number of pulses per rotation of the motor (PPR data).
- The initial value of the specified point is the home position (where all axes are at pulse 0). The specified point can be changed. For details, refer to " 3.2 Specified Point ".

③Alarm Occurrence

If the error alarm occurs again, there may be an error in the PG system. Check the system. After adjusting the erroneous axis, calibrate the home position of the axis, then check the position again.

NOTE

- Home position calibration of all the axes at the same time enables playback operations without having to check the position.
- Sometimes in a system with a manipulator that has no brake, it is possible to enable playback without position checking after the absolute data allowable range error alarm occurs. However, as a rule, always check the position.
  Under the above special conditions, the manipulator moves as follows:
  After starting, the manipulator moves at low speed (1/10 of the maximum speed) to the step indicated by the cursor. If it is stopped and restarted during this motion, the low speed setting is retained until the step at cursor is reached. Regardless of cycle setting, the manipulator stops after the cursor step is reached. Starting the manipulator again then moves it at the programmed speed and cycle of the job.

3.2.2 Specified Point Setting

Apart from the normal home position of the manipulator, the specified point can be set up as a check point for absolute data. Use the following steps to set the specified point.
If two or more manipulators or stations are controlled by one control panel, the specified point must be set for each manipulator or station.

Operation

Select {ROBOT} under the top menu ➡ Select {SECOND HOME POS}*1 ➡ Press the page [▶]*2 ➡ Press the axis keys*3 ➡ Press [MODIFY] and [ENTER]*4

Explanation

*1 The specified point display is shown.
The message “Available to move to any modify specified point” is shown.

```
DATA        EDIT        DISPLAY     UTILITY
SPECIFIED POINT                     R1
                SPECIFIED   CURRENT   DIFFERENCE
R1:S                0         0          0
   L                0         0          0
   U                0         0          0
   R                0         0          0
   B                0         0          0
   T                0         0          0

!Available to move to any modify specified point
```

2 The group axes by which the specified point is set is selected when there are two or more group axes.

3 Move the manipulator to the new specified point.

4 The specified point is modified.

3.2.3 Procedure After an Alarm

WARNING

- Be aware of safety hazards when performing the position confirmation of the specified point.

  Abnormality of the PG system may be cause for alarm. The manipulator may operate in an unexpected manner, and there is a risk of damage to equipment or injury.

If the absolute data allowable range alarm occurs, perform the followings

- Reset the alarm
- Turn Servo power on

and confirm the specified point. After the confirmation, if the PG is found to be the cause of the alarm, perform the necessary operation, such as replacing the PG, etc.
The robot position data when turning power off and on are shown in “Power ON/OFF Position Display”.

NOTE Refer to " 5.6 Position Data When Power is Turned ON/OFF " for details on the “Power ON/OFF Position Display”.

Operation

Select {ROBOT} under the top menu ➡ Select {SECOND HOME POS}*1 ➡ Press the pa g *2 ➡ Press [FWD]*3 ➡ Select {DATA} under the menu ➡ Select {CONFIRM POSITION}*4

Explanation

***1** The specified point display is shown.

***2** The group axes by which the specified point is set is selected when there are two or more group axes.

***3** Move the manipulator to the new specified point.The robot moving speed is set as selected manual operation speed.

***4** The message “Home position checked” is shown.
Pulse data of specified point and current pulse data are compared. If the compared error is in allowed band, playback operation can be done.
If the error is beyond the allowed band, the alarm occurs again.

3.3 Setting the Controller Clock

The clock inside of the XRC controller can be set.

Operation

Select {SETUP} under the top menu ➡ Select {DATE/TIME}*1 ➡ Select “DATE” or “CLOCK”*2 ➡ Input the new date or time *3 ➡ Press [ENTER]*4

Explanation

***1** The date and time set display is shown.

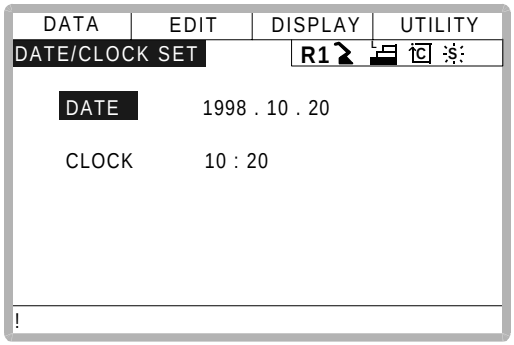

***2** The input buffer line is displayed.

***3** For instance, to make the date May 1, 1998, input [1998.5.1]. To set the time at exactly ten o'clock, enter [10.00].

```
> 1998.5.1
```

***4** Date and time are modified.

```
DATA    EDIT    DISPLAY    UTILITY
DATE/CLOCK SET             R1
  DATE      1998 . 05 . 01
  CLOCK     10 : 20
!
```

3.4 Setting Play Speed

Operation

Select {SETUP} under the top menu ➡ Select {SET SPEED}*1 ➡ Press the page key *2 ➡ Select "JOINT" or "LNR/CIR"*3 ➡ Select desired speed value *4 ➡ Input the speed value ➡ Press [ENTER]*5

Explanation

***1** The play speed display is shown.

```
DATA    EDIT    DISPLAY    UTILITY
SPEED SET                  R1
 JOINT     R1:1     0.78 %
            2       1.56 %
            3       3.12 %
            4       6.25 %
            5      12.50 %
            6      25.00 %
            7      50.00 %
            8     100.00 %
!
```

***2** When two or more manipulators and stations exist in the system, the control group is changed by the page key .

***3** The type of speed alternately changes from “JOINT” to “LNR/CIR”.

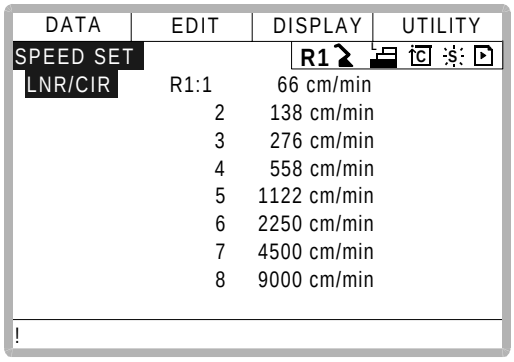

***4** The input buffer line is displayed.

***5** The speed value is modified.

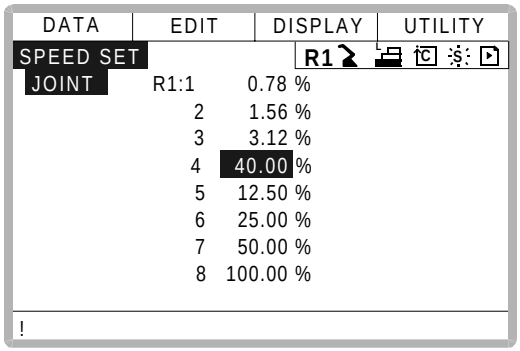

3.5 All Limits Releasing

CAUTION

- To operate the manipulator with all limits released, pay extra attention to the operating environment around you.

  When all limits are released, the manipulator or equipment may be damaged.

The following limits can be released by the operation explained in the following.

Limit Type	Contents
Mechanical Limit	Limit for checking manipulator's working envelope
L-U Interference	Limit for checking L- and U-axes interference area
Software Limit	Every axis soft limit for checking manipulator's working envelope
Cube Interference	Limit for checking cube interference area set by user

NOTE If the security mode is not at management mode, all limits releasing is not allowed. Refer to " 2 Security System " for details about security modes.

Operation

Select {ROBOT} under the top menu ➡ Select {LIMIT RELEASE}*1 ➡ Select "ALL LIMITS RELEASE"*2

Explanation

*1 The limit release display ia shown.

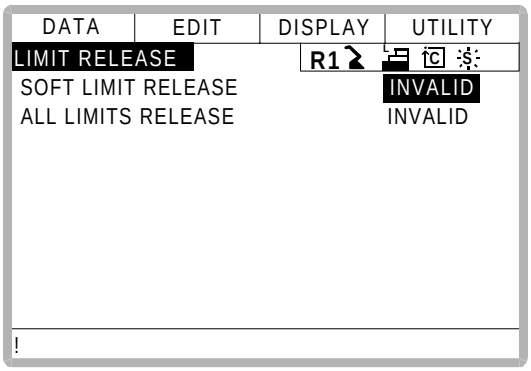

***2** "VALID" and "INVALID" are displayed alternately every time [SELECT] is pressed. When all limits release is changed to "VALID", the message "All limits have been released" is displayed. When the setting changes to "INVALID", the message "All limits release has been canceled" is displayed for three seconds.

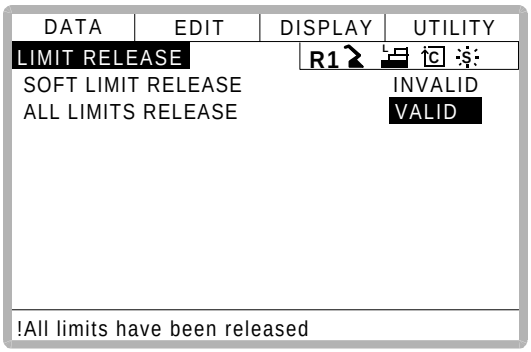

3.6 Overrun / Shock Sensor Releasing

CAUTION

- To operate the manipulator with overrun released or with shock sensor released, pay extra attention to the operating environment around you.

If the manipulator stops by overrun detection or shock sensor detection, release the overrun or shock sensor by the following procedure and move the manipulator using the axis keys.

Operation

Select {ROBOT} under the top menu ➡ Select {OVERRUN & S-SENSOR}*1 ➡ Select “RELEASE”*2 ➡ Select “ALM RST”*3

Explanation

***1** The overrun & shock sensor release display is shown.
The stopping condition when the shock sensor is detected can be selected “EMERGENCY STOP” or “HOLD” at the “SHOCK SENSOR STOP COMMAND”. “E-STOP” and “HOLD” are displayed alternately every time [SELECT] is pressed.

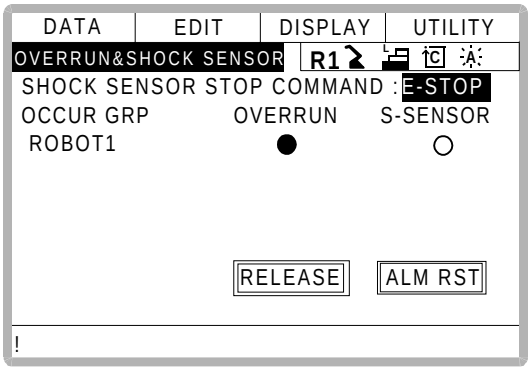

***2** “●” is displayed at the control group which detects overrun or shock sensor. If “RELEASE” is selected, overrun or shock sensor is released and “CANCEL” is displayed.

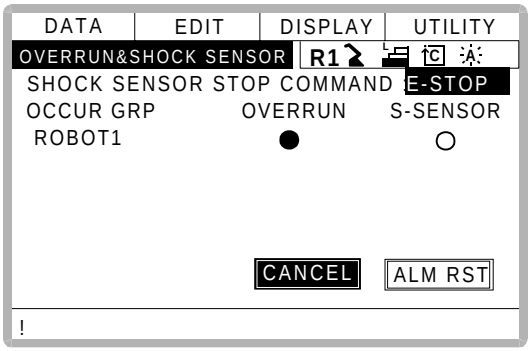

***3** Alarm is reset and manipulator can be moved using the axis keys.

NOTE

- During overrun or shock sensor releasing, the manipulator can be moved using the axis keys with low speed or inching motion only.
- After overrun or shock sensor releasing, if “CANCEL” is selected or the display is changed to the other one, overrun or shock sensor releasing is canceled.

3.7 Interference Area

3.7.1 Interference Area

The interference area is a function that prevents interference between multiple manipulators or the manipulator and peripheral devices. The area can be set up to 24 area. There are two types of interference areas, as follows:

- Cubic Interference Area
- Axis Interference Area

The XRC judges whether the tool center point of the manipulator is inside or outside this area, and outputs this status as a signal.

If the tool center point of the manipulator is inside the area, the interference 1 inside signal or interference 2 inside signal come on and the manipulator automatically decelerates to a stop. The manipulator stands by until these signals are turned off, whereupon it automatically restarts.

3.7.2 Cubic Interference Area

■ Cubic Interference Area

This area is a rectangular parallelepiped which is parallel to the base coordinate system, robot coordinate system, or user coordinate system. The XRC judges whether the current position of the manipulator's tool center point is inside or outside this area, and outputs this information as a signal. The cubic interference areas can be set, parallel to the base coordinate system or user coordinate system.

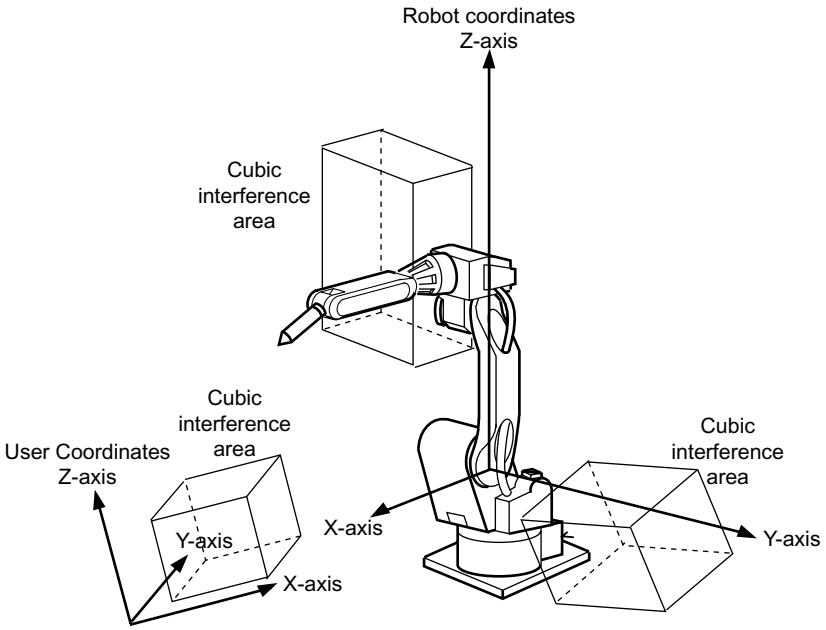

■ Setting Method

There are three ways to set cubic interference areas, as described in the following:

Number Input of Cube Coordinates

Enter the maximum and minimum values for the cube coodinates.

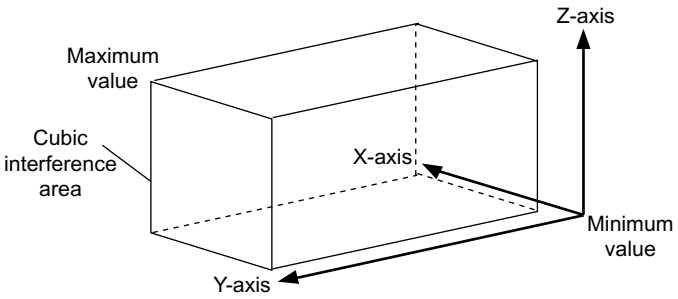

Teaching Corner

Move the manipulator at the maximum and minimum value positions of the cube corner using the axis keys.

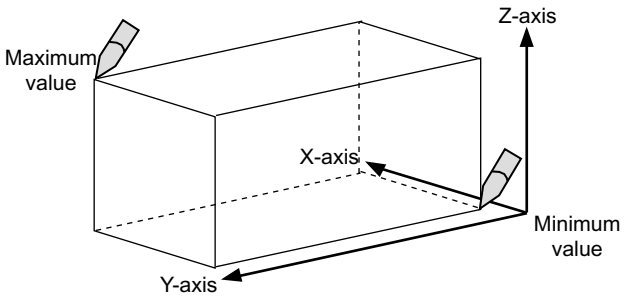

Number Input of the Side of Cube and Teaching Center

After entering the lengths of the three faces of the cube (axial length) using the number keys, move the manipulator to the center point of the cube using the axis keys.

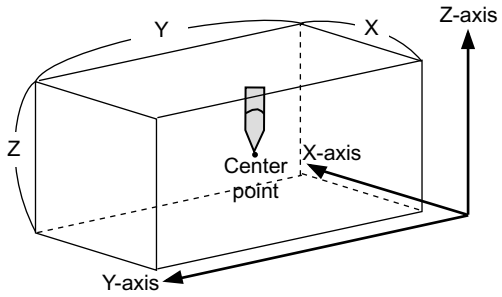

■ Setting Operation

Operation

Select {ROBOT} under the top menu ➡ Select {INTERFERENCE}*1 ➡ Select the desired cube number*2 ➡ Select “METHOD” *3 ➡ Select “CONTROL GROUP”*4 ➡ Select “REF COORDINATES” *5 ➡ Select “CHECK MEASURE”*6

Explanation

***1** The cubic interference area display is shown.

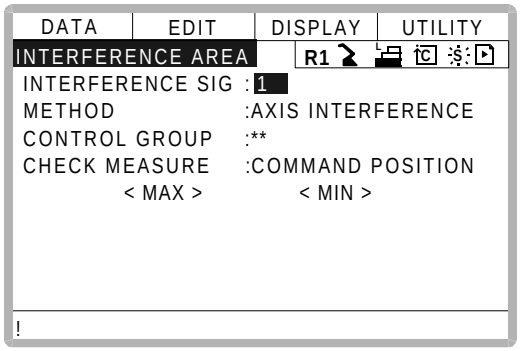

***2** Select the desired cube number using the page key or by number input.
The method for number input is as follows: Move cursor to “INTERFERENCE SIG” and press [ENTER] to display the number input line. Input desired signal number and press [ENTER].

***3** ”AXIS INTERFERENCE” and “CUBIC INTERFERENCE” are displayed alternately every time [SELECT] is pressed. If “CUBIC INTERFERENCE” is selected, the display is changed.

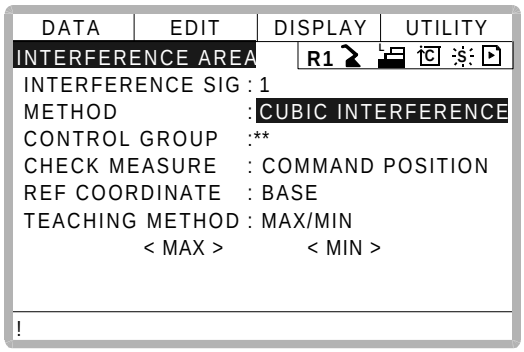

***4** The selection dialog is displayed. Select desired control group.

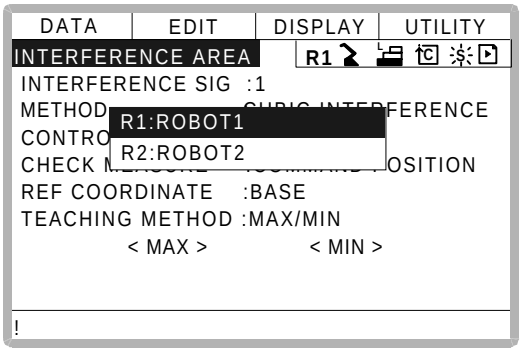

***5** The selection dialog is displayed. Select desired coordinate.
If the user coordinates are selected, the number input line is displayed. Input the user coordinate number and press [ENTER].

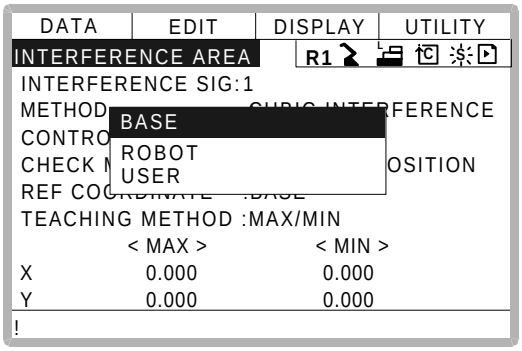

***6** Each time [SELECT] is pressed, “COMMAND POSITION” and “FEEDBACK POSITION” alternate.

```
DATA | EDIT | DISPLAY | UTILITY
INTERFERENCE AREA        R1
INTERFERENCE SIG :1
METHOD           :
CONTROL GROUP    :**
REF COORDINATE   :BASE
TEACHING METHOD  :MAX/MIN
CHECK MEASURE    COMMAND POSITION
          < MAX >        < MIN >

!
```

NOTE

To stop the manipulator movement using the interference signal (use the cube interference signal for mutual interference between robots), set CHECK MEASURE to “COMMAND POSITION”.
When set to the “FEEDBACK POSITION”, the manipulator decelerates to a stop after entering the interference area.
When informing an external unit of the actual manipulator position, use the “FEEDBACK POSITION” setting so the timing of the output signal is more accurate.

Number Input of Cube Coordinates

Operation

Select “METHOD”*1 ➡ Input number for “MAX” and “MIN” data and press [Enter] *2

Explanation

***1** Each time [SELECT] is pressed, “MAX/MIN” and “CENTER POS” alternate.
Select “MAX/MIN”.

```
DATA | EDIT | DISPLAY | UTILITY
INTERFERENCE AREA        R1
INTERFERENCE SIG : 1
METHOD           : CUBIC INTERFERENCE
CONTROL GROUP    : R1
CHECK MEASURE    : COMMAND POSITION
REF COORDINATE   : BASE
TEACHING METHOD  : MAX/MIN
          < MAX >        < MIN >
X          0.000          0.000
Y          0.000          0.000
!
```

***2** The cubic interference area is set.

```
DATA | EDIT | DISPLAY | UTILITY
INTERFERENCE AREA        R1
INTERFERENCE SIG : 1
METHOD           : CUBIC INTERFERENCE
CONTROL GROUP    : R1
CHECK MEASURE    : COMMAND POSITION
REF COORDINATE   : BASE
TEACHING METHOD  : MAX/MIN
          < MAX >        < MIN >
X        100.000          0.000
Y         50.000          0.000
!
```

Teaching Corner

Operation

Select “METHOD”*1 ➡ Press [MODIFY]*2 ➡Move the cursor to “<MAX>” or “<MIN>”*3 ➡Move the manipulator using the axis keys *4 ➡ Press [ENTER *5

Explanation

1 Each time [SELECT] is pressed, “MAX/MIN” and “CENTER POS” alternate. Select “MAX/MIN”.

2 The message “Teach max./min. position” is displayed.

```
DATA | EDIT | DISPLAY | UTILITY
INTERFERENCE AREA        R1
INTERFERENCE SIG  : 1
METHOD            : CUBIC INTERFERENCE
CONTROL GROUP     : R1
CHECK MEASURE     : COMMAND POSITION
REF COORDINATE    : BASE
TEACHING METHOD   : MAX/MIN
            < MAX >        < MIN >
X           0.000          0.000
Y           0.000          0.000
!Teach max./min. position
```

3 Move cursor to “<MAX>” for changing maximum value and move cursor to “<MIN>” for changing minimum value. The cursor moves to only either “<MIN>” or “<MAX>” at this time. The cursor moves freely when this operation is canceled by pressing [CANCEL].

4 Move the manipulator to the maximum or minimum position of the cube using the axis keys.

5 The cubic interference area is registered.

```
DATA | EDIT | DISPLAY | UTILITY
INTERFERENCE AREA        R1
INTERFERENCE SIG  : 1
METHOD            : CUBIC INTERFERENCE
CONTROL GROUP     : R1
CHECK MEASURE     : COMMAND POSITION
REF COORDINATE    : BASE
TEACHING METHOD   : MAX/MIN
            < MAX >        < MIN >
X         100.000          0.000
Y          50.000          0.000
!
```

Number Input of the Side of Cube and Teaching Center

Operation

Select “METHOD”*1 ➡ Input data for length of the cube and press [ENTER]*2 ➡ Press [MODIFY]*3 ➡ Move the manipulator using the axis keys *4 ➡ Press [Enter]*5

Explanation

***1** Each time [SELECT] is pressed, “MAX/MIN” and “CENTER POS” alternate. Select “CENTER POS”.

```
DATA | EDIT | DISPLAY | UTILITY
INTERFERENCE AREA        R1
INTERFERENCE SIG : 1
METHOD             : CUBIC INTERFERENCE
CONTROL GROUP      : R1
CHECK MEASURE      : COMMAND POSITION
REF COORDINATE     : BASE
TEACHING METHOD    : CENTER POS
          < MAX >    < MIN >    <LENGTH>
X          0.000      0.000      0.000
Y          0.000      0.000      0.000
!
```

***2** The length is set.

```
DATA | EDIT | DISPLAY | UTILITY
INTERFERENCE AREA        R1
INTERFERENCE SIG : 1
METHOD             : CUBIC INTERFERENCE
CONTROL GROUP      : R1
CHECK MEASURE      : COMMAND POSITION
REF COORDINATE     : BASE
TEACHING METHOD    : CENTER POS
          < MAX >    < MIN >    <LENGTH>
X          0.000      0.000      0.000
Y          0.000      0.000     50.000
!
```

***3** The message “Move to center point and teach” is displayed.
The cursor moves to only either “<MIN>” or “<MAX>” at this time. The cursor moves freely when this operation is canceled by pressing [CANCEL].

```
DATA | EDIT | DISPLAY | UTILITY
INTERFERENCE AREA        R1
INTERFERENCE SIG : 1
METHOD             :CUBIC INTERFERENCE
CONTROL GROUP      :R1
CHECK MEASURE      :COMMAND POSITION
REF COORDINATE     :BASE
TEACHING METHOD    :CENTER POS
          < MAX >    < MIN >    <LENGTH>
X          0.000      0.000      0.000
Y          0.000      0.000     50.000
!Move to center point and teach
```

***4** Move the manipulator to the center point of the cube using the axis keys.

***5** The current position is registered as the center point of the cube.

3.7.3 Axis Interference Area

■ Axis Interference Area

The axis interference area is a function that judges the current position of the each axis and outputs a signal. Once the maximum and minimum values have been set at the plus and minus sides of the axis to define the operating range, a signal indicating whether the current position of the axis is inside or outside this range is output. (ON: inside, OFF: outside)

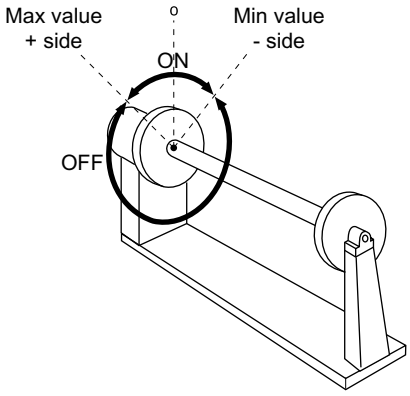

Axis Interference Signal for Station Axis

■ Setting Operation

Number Input of Axis Data

Operation

Select {ROBOT} under the top menu ➡ Select {INTERFERENCE}*1 ➡ Select the desired interference signal number*2 ➡ Select “METHOD” *3 ➡ Select “CONTROL GROUP”*4 ➡ Select “CHECK MEASURE” *5 ➡ Input data for desired axis and press [Enter]*6

Explanation

1 The cubic interference area display is shown.

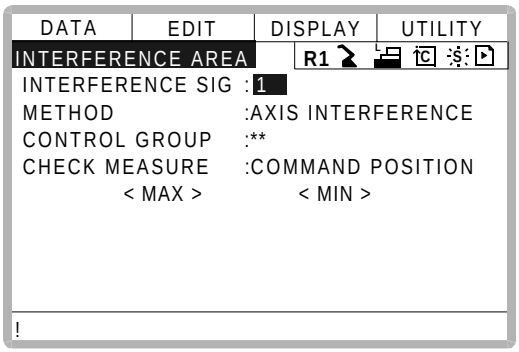

***2** Select the desired interference signal number using the page key or by number input.
The method for number input is as follows: Move cursor to “INTERFERENCE SIG” and press [ENTER] to display the number input line. Input desired signal number and press [ENTER].

***3** ”AXIS INTERFERENCE” and “CUBIC INTERFERENCE” are displayed alternately every time [SELECT] is pressed. Select “AXIS INTERFERENCE”.

***4** The selection dialog is displayed. Select desired control group.

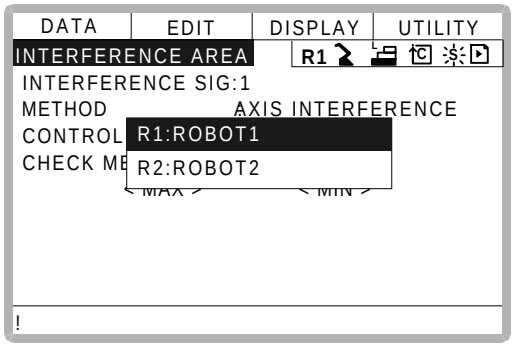

***5** Each time [SELECT] is pressed, “COMMAND POSITION” and “FEEDBACK POSITION” alternate.

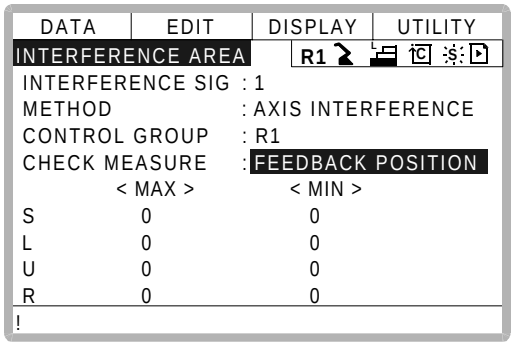

***6** The interference area is set.

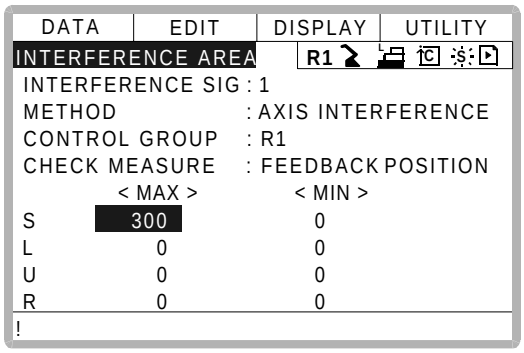

Setting Axis Data by Moving Manipulator Using the Axis Key

Operation

Select {ROBOT} under the top menu ➡ Select {INTERFERENCE} ➡ Select the desired interference signal number ➡ Select “METHOD” ➡ Select “CONTROL GROUP”*1 ➡Press [MODIFY] *2 ➡Move the manipulator using the axis keys *3 ➡ Press [ENTER]*4

Explanation

***1** Operate in the same way as shown in Explanation *1~*4 in ”Number Input of Axis Data”.

***2** Move cursor to “<MAX>” for changing maximum value and move cursor to “<MIN>” for changing minimum value. The cursor moves to only either “<MIN>” or “<MAX>” at this time. The cursor moves freely when this operation is canceled by pressing [CANCEL].

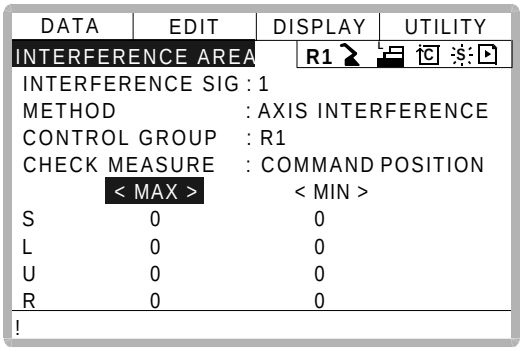

***3** Move the manipulator to the desired position using the axis keys.

***4** The axis interference area is registered.

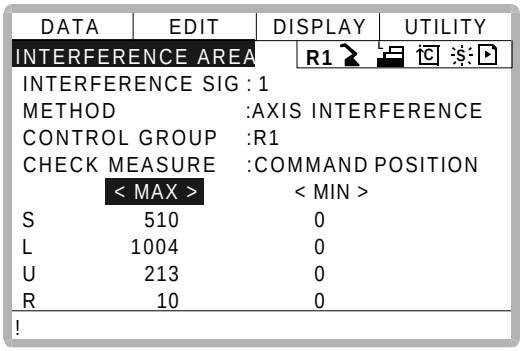

3.7.4 Clearing Interference Area Data

Operation

Select interference signal for clearing*1 ➡ Select {DATA} under the menu ➡ Select {CLEAR DATA}*2 ➡ Select "YES"*3

Explanation

1 Select the desired signal number for clearing using the page key or by number input.
The method for number input is as follows: Move cursor to the signal number and press [ENTER] to display the number input line. Input desired signal number and press [ENTER].

2 The confirmation dialog is displayed.

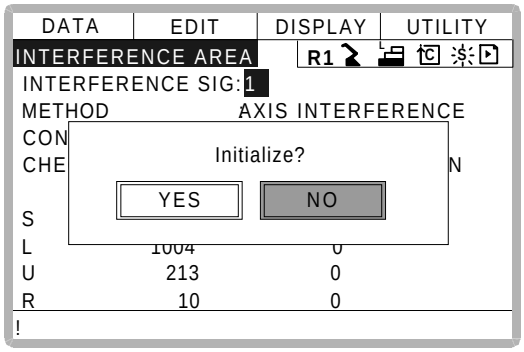

3 All the data of the signal are cleared.

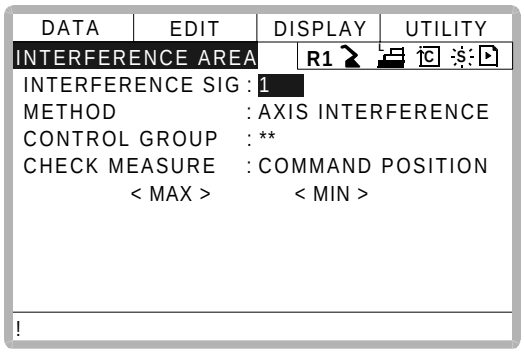

3.8 Operation Origin Point Setting

3.8.1 What is the Operation Origin Point?

The Operation Origin Point is a reference point for manipulator operations. It prevents interference with peripheral devices by ensuring that the manipulator is always within a set range as a precondition for operations such as starting the line. The manipulator can be moved to the set operation origin point by operation from the programming pendant, or by signal input from an external device. When the manipulator is in the vicinity of the operation origin point, the operation origin point signal turns ON.

3.8.2 Setting Operation Origin Point

■ Operation Origin Point Display

Operation

Select {ROBOT} under the top menu ➔ Select {OPE ORIGIN POS}*1 ➔ Press the page key *2

Explanation

*1 Operation origin point display is shown. For spot application or handling application.

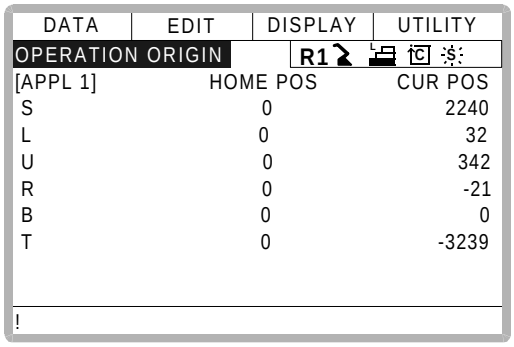

*2 When two or more manipulators and stations exist in the system, the control group is changed using the page key

■ Registering/Changing the Operation Origin Point

Operation

Press the axis keys in the operation origin point display*1 ➔ Press [MODIFY] and [ENTER]*2

Explanation

*1 Move the manipulator to the new operation origin point.

***2** New operation origin point is set.

NOTE

When the operation origin point is changed, the operation origin cube is automatically set as cube 24~22 in the base coordinate system.

- The cube 24 is for ROBOT1
- The cube 23 is for ROBOT2
- The cube 22 is for ROBOT3

The operation origin cube is a cube like the one shown in the figure below; the length of its sides is determined by a parameter setting made by the user (units: µm). By changing this parameter setting, the size of the cube can be changed.

S3C412: The operation origin cube length of its sides(µm)

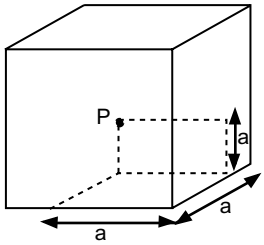

Specify whether “COMMAND POSITION” or “FEEDBACK POSITION” is to be set to the operation origin cube signal’s CHECK MEASURE in the interference area settings. “COMMAND POSITION” is the default setting.

■ Returning to the Operation Origin Point

In the teach mode

Operation

Press [FWD] in the operation origin point display*1

Explanation

***1** The manipulator moves to the new operation origin point. During movement, the message “Manipulator is moving to operation origin point” is shown. The moving speed is the selected manual operation speed.

In the play mode

When the operation origin point return signal is input (detected at leading edge), the tool center point of the manipulator is moved to the operation origin point using the same operation as the teach mode. However, the speed for this is set in the parameters.

■ Output of the Operation Origin Point Signal

This signal is output any time the current position of the tool center point of the manipulator is checked and found to be within the operation origin cube.

3.9 Tool Data Setting

3.9.1 Registering Tool Files

■ Number of Tool Files

There are 24 tool files numbered 0 to 23. Each file is called as a tool file.

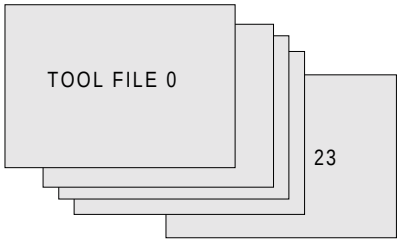

■ Registering Coordinate Data

When the number input operation is used for registering the tool file, input the control point of the tool on the flange coordinates.

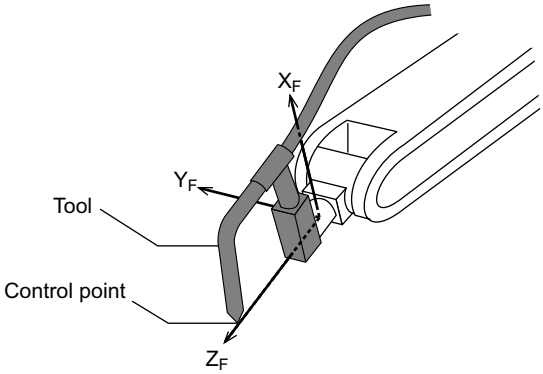

Operation

Select {ROBOT} under the top menu ➡ Select {TOOL}*1 ➡ Select the desired tool number*2 ➡ Select the desired coordinate axis to modify*3 ➡ Input the tool data ➡ Press [ENTER]*4

Explanation

***1** The tool list display is shown. When the tool extension function is valid, the list is shown. When the tool extension function is invalid, the coordinate display is shown.

SUPPLE-MENT

Tool File Extension Function
Normally, one robot uses one kind of tool file. The tool file extension function can change many tool files to be used by one robot. Use the following parameter to set this function.
S2C261: TOOL NO. SWITCHING (1: enabled, 0: disabled)
For more details, refer to “Concurrent I/O·Parameter”.

```
DATA | EDIT | DISPLAY | UTILITY
TOOL COORDINATE                R1
 NO.                NAME
 00              [TORCH1      ]
 01              [TORCH2      ]
 02              [            ]
 03              [            ]
 04              [            ]
 05              [            ]
 06              [            ]
 07              [            ]
!
```

```
DATA | EDIT | DISPLAY | UTILITY
TOOL                           R1
 TOOL NO. :  00
 NAME  :TORCH1
 X        0.000 mm     Rx      0.00 deg.
 Y        0.000 mm     Ry      0.00 deg.
 Z        0.000 mm     Rz      0.00 deg.

 W        0.000 kg

 Xg       0.000 mm
!
```

2 When the tool list display is shown, move the cursor and press [SELECT]. The coordinate display of the selected tool is shown. If the tool coordinate display is shown, press the page key to select the desired tool.
To switch the tool list display and the tool coordinate display, press {DISPLAY} → {LIST} or {DISPLAY} → {COORDINATE DATA}.

```
DATA | EDIT | DISPLAY | UTILITY
TOOL                   LIST
 TOOL NO. :  00
 NAME  :TORCH1
 X        0.000 mm     Rx      0.00 deg.
 Y        0.000 mm     Ry      0.00 deg.
 Z        0.000 mm     Rz      0.00 deg.

!
```

3 The number input line is displayed.

4 The tool data is registered.

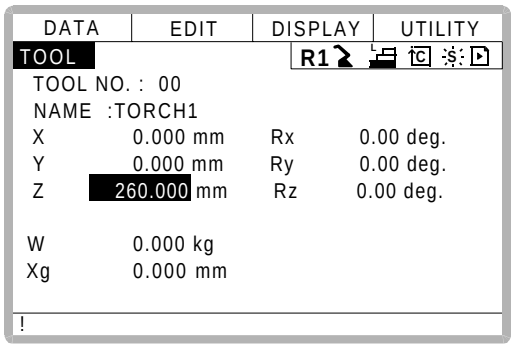

<Setting Example>

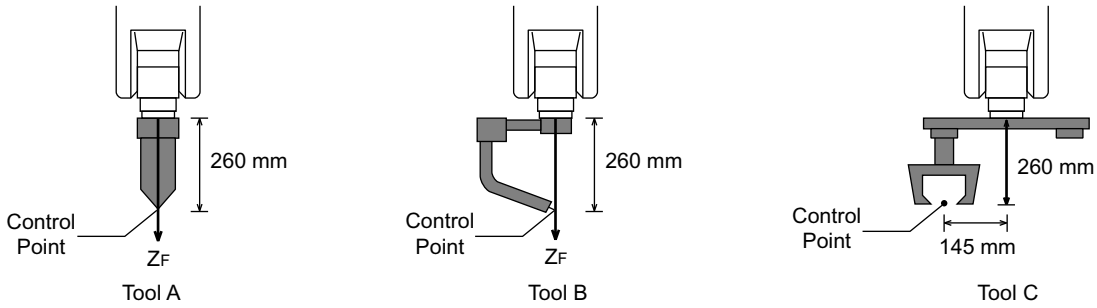

Case of Tool A, B	Case of Tool C
X 0.000 mm Rx 0.00 deg. Y 0.000 mm Ry 0.00 deg. Z 260.000 mm Rz 0.00 deg.	X 0.000 mm Rx 0.00 deg. Y 145.000 mm Ry 0.00 deg. Z 260.000 mm Rz 0.00 deg.

■ Registering Tool Pose

The tool pose data is angle data which shows the relation between the flange coordinates and the tool coordinates. The angle when the flange coordinates are rotated to meet to the tool coordinates becomes an input value. Clockwise toward the arrow is the positive direction. Register in the order of Rz → Ry → Rx.
The following, register Rz=90, Ry=90, Rx=0

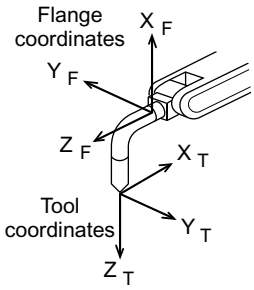

Operation

Select {ROBOT} under the top menu ➡ Select {TOOL} ➡ Select the desired tool number*1 ➡ Select the desired coordinate axis to modify*2 ➡ Input the tool pose data*3 ➡ Press [ENTER *4

Explanation

***1** In the same way shown in Explanation *1,*2 in ”Registering coordinate data”, the desired tool coordinate display is shown.

***2** First, select Rz.

***3** Input rotation angle around Z_F of the flange coordinates.

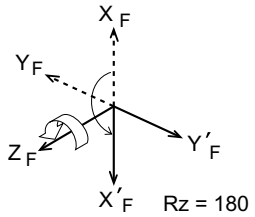

X	0.000 mm	Rx	0.00 deg.
Y	0.000 mm	Ry	0.00 deg.
Z	0.000 mm	Rz	180.00 deg.

***4** The rotation angle of Rz is registered.
In the same way, register the angle of Ry, Rx.
Ry must be the input rotation angle around Y_F flange coordinates.

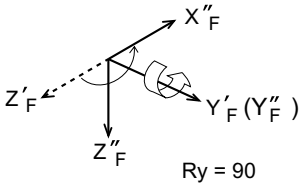

X	0.000 mm	Rx	0.00 deg.
Y	0.000 mm	Ry	90.00 deg.
Z	0.000 mm	Rz	180.00 deg.

Rx must be the input rotation angle around X_F of flange coordinates.

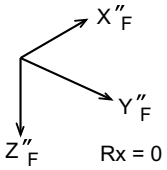

X	0.000 mm	Rx	0.00 deg.
Y	0.000 mm	Ry	90.00 deg.
Z	0.000 mm	Rz	180.00 deg.

NOTE If tool data is registered in the tool file by tool calibration, the old data will be deleted.

■ Setting the Tool Load Information

The tool load information includes weight, a center of gravity position, and moment of inertia at the center of gravity of the tool installed at the flange.

SUPPLE-MENT

For more details on the tool load information, refer to 3.11.3 “Tool Load Information Setting.”

3.9.2 Tool Calibration

■ Tool Calibration

To ensure that the manipulator can perform interpolation operations such as linear and circular interpolation correctly, accurate dimensional information on tools such as torches, tools, and guns must be registered and the position of the tool center point must be defined. Tool calibration is a function that enables this dimensional information to be registered easily and accurately. When this function is used, the tool center point is automatically calculated and registered in the tool file. What is registered in tool calibration is the coordinates of the tool center point in the flange coordinates.

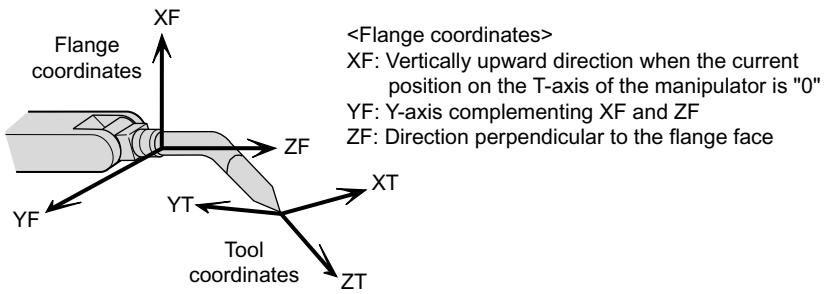

■ Teaching

In order to perform tool calibration, five different poses (TC1 to 5) must be taught with the tool center point as the reference point. The tool dimensions are automatically calculated on the basis of these five points.

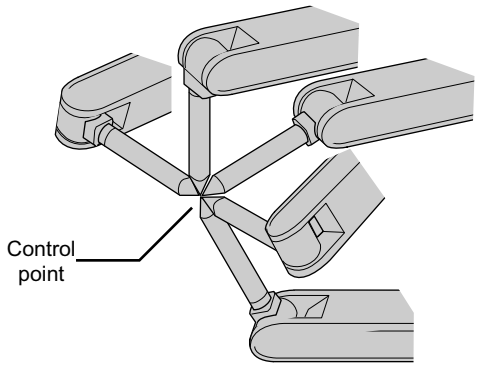

Each pose must be arbitrary. Accuracy may decrease when pose setting is rotated in a constant direction.

SUPPLE-MENT

There are 24 tool files numbered 0 to 23. In a basic system with one manipulator and one tool, the tool file for tool No.0 is used. If there is more than one tool, for example when using a multihand, use the tool numbers in the order 0, 1, 2, etc.

SUPPLE-MENT

Tool pose data is not registered in tool calibration. For details on how to register pose data, refer to the preceding clause " RegisteringTool Pose ".

Operation

Select {ROBOT} under the top menu ➡ Select {TOOL} ➡ Select the desired tool number*1 ➡ Select {UTILITY} under the menu ➡ Select {CALIBRATION}*2 ➡ Select the robot*2 ➡ Select "POSITION"*4 ➡ Move the manipulator using the axis key ➡ Press [MODIFY] ➡Press [MODIFY] and [ENTER] *5 ➡ Select "COMPLETE"*6

Explanation

***1** In the same way shown in Explanation *1,*2 in " Registering Coordinate Data ", the desired tool coordinate display is shown.

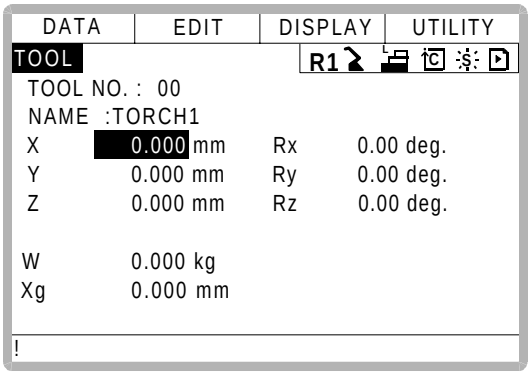

***2** The tool calibration setting display is shown.

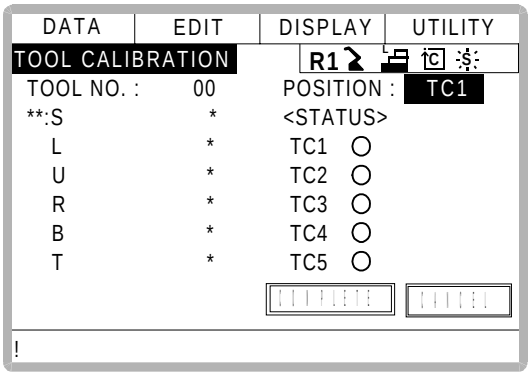

***3** Select the robot to calibrate. (When the robot has already been selected or there is only one of robot, this operation should not be performed.) Select "**" in the tool calibration setting display and select the robot in the displayed selection dialog.

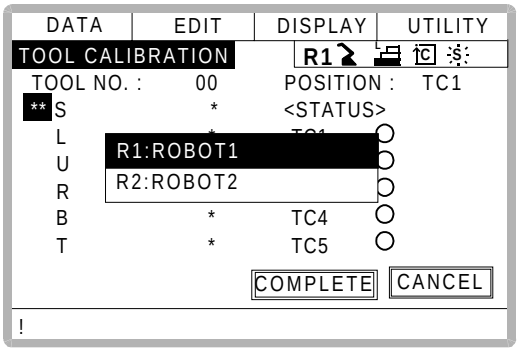

4 The selection dialog is displayed. Select the teaching point for calibration.

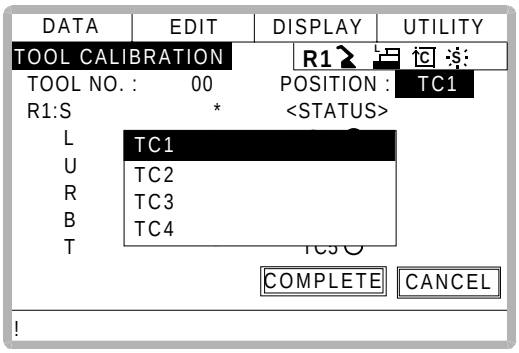

5 Taught position is registered.
Repeat *4~*5 operation to teach TC1 to TC5.
● indicates that teaching is completed and ○ indicates that it is not completed.

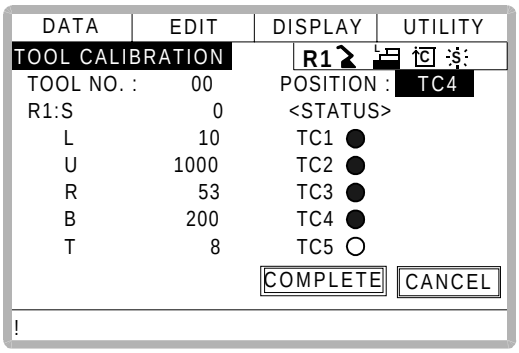

To check the taught positions, call up the required display among TC1 to TC5 and press [FWD]. The manipulator moves to the set position.
If there is a difference between the current position of the manipulator and the displayed position data, “TC□“ next to “POSITION” in the display flashes.

6 Calibration data is registered in the tool file. Once calibration is completed, the tool coordinate display is shown.

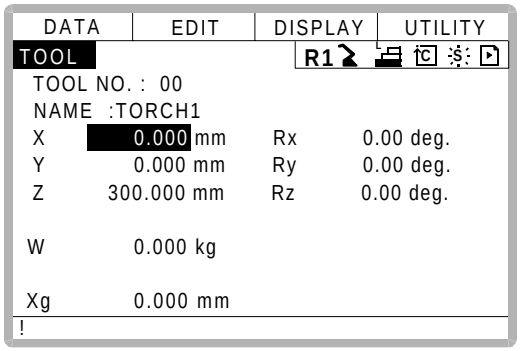

■ Clearing Calibration Data

Before the calibration of a new tool, clear the robot information and calibration data.

Operation

Select {DATA} under the menu ➡ Select {CLEAR DATA}*1 ➡ Select "YES"*2

Explanation

***1** The confirmation dialog is shown.

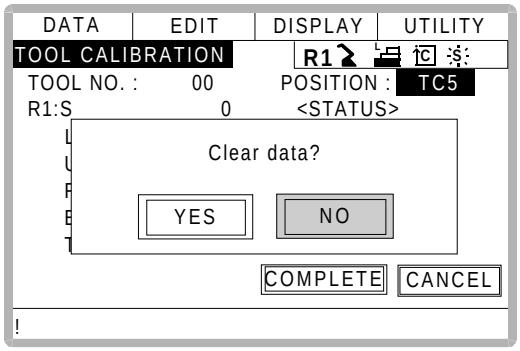

***2** All data is cleared.

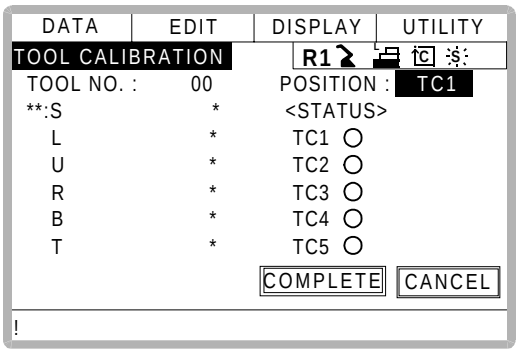

NOTE Only tool coordinate data are calculated using tool calibration. If tool pose data is required, input the data number in the tool coordinate display.
Refer to " Registering Tool Pose " for the operation.

■ Checking the Tool Center Point

After registering the tool file, check if the tool center point is correctly registered by performing a TCP fixed operation like the one shown below, in any coordinate system other than the joint coordinates.

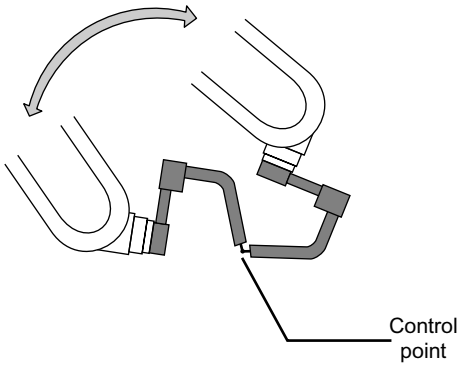

Operation

Press [COORD]*1 ➡ Select desired tool number*2 ➡ Move the R, B, or T axes using the axis key*3

Explanation

***1** Select any coordinate type except "JOINT" by pressing [COORD].

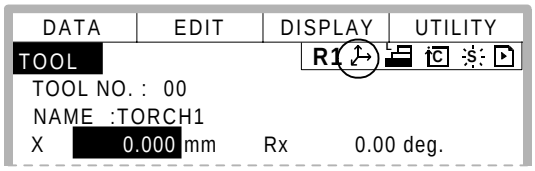

***2** Show the tool coordinate display of the desired tool by pressing the page key selecting it in the tool list.

***3** By pressing the axis keys for the R, B, and T axes, change the manipulator pose without changing the tool center point position.
If this operation shows a large tool center point error, adjust the tool data.

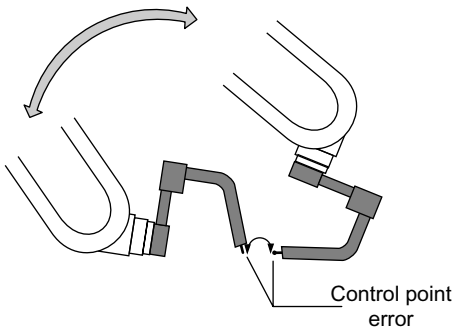

SUPPLE-MENT For details on TCP fixed operation, see the Operator's Manual (Application)

3.9.3 Automatic Measurement of the Tool Load and the Center of Gravity

■ What is the Automatic Measurement of the Tool Load and the Center of Gravity?

With this function, the user can register the load of tool and the position of the tools center of gravity.
The tool load and the position of it's center of gravity are measured and registered in a tool file.

> **NOTE**
> This function is available for the models listed below. Contact your Yaskawa representative for information on other models.
> Applicable models: MOTOMAN UP6, SK16X, SK45X, and UP130
> This function can be used where the manipulator is installed level on the ground.
> For the conditions required for manipulator installation, refer to 3.11 "ARM Control".

■ Measurement of the Tool Load and the Center of Gravity

To measure the tool load and the center of gravity, move the manipulator to it's home position (horizontal to the U-, B- and R-axes) and operate the U-, B- and R-axes.

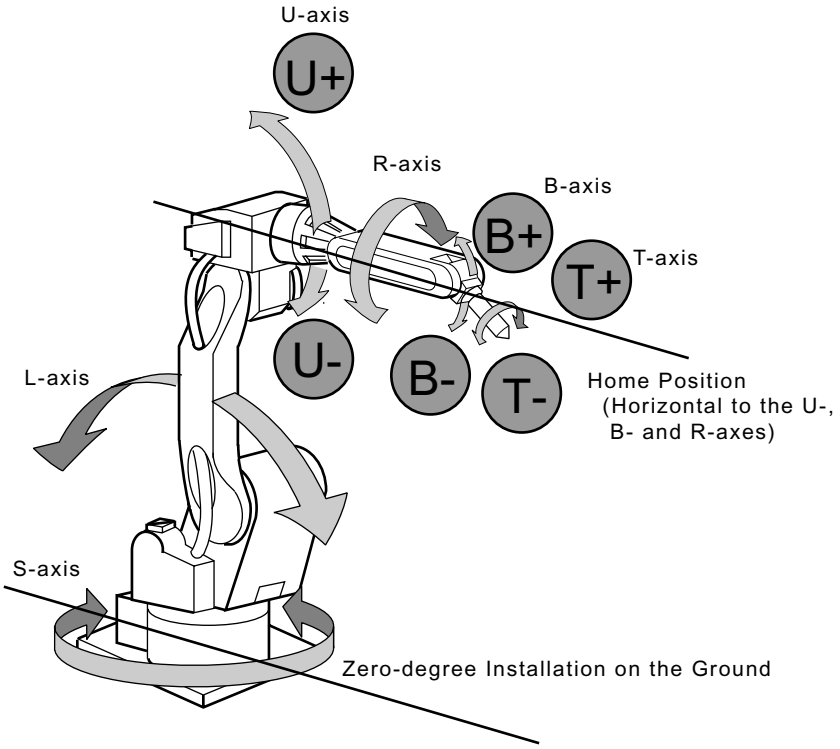

> **NOTE**
> To measure the tool load or the center of gravity, remove the cables or wires connected to the tool. Otherwise, the measurements may not be correct.

Operation

Select {ROBOT} under the top menu ➡ Select {TOOL}*1 ➡ Select the desired tool number*2 ➡ Select {UTILITY} under the menu ➡ Select {W.GRAV.POS MEASURE}*3 ➡ Press the page ▶*4 ➡ Press [NEXT]*5 ➡ Press [NEXT] again*6 ➡ Select "REGISTER"*7

Explanation

***1** The tool list display is shown. The tool list is called up only when the file extension function is valid. If the file extension function is invalid, the tool coordinates is shown.

SUPPLE-MENT

Tool File Extension Function
Use the following parameter to set the Tool File Extension Function.
S2C261: TOOL NO. SWITCHING
"0": Tool switching prohibited.
"1": Can change 24 kinds of tools numbering from 0 to 23.

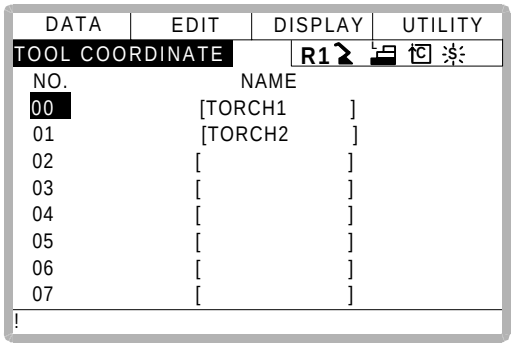

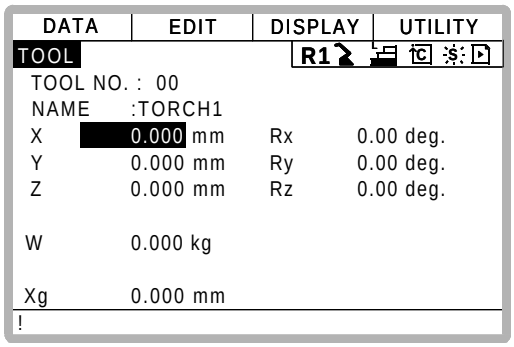

***2** Move the cursor to the desired number in the tool list and press [SELECT]. The tool coordinates of the selected number is shown. In the tool coordinates, change the desired number by pressing the page key . To alternate between the tool list and the tool coordinates, select {DISPLAY} and {LIST}, or {DISPLAY} and {COORDINATE VALUE} under the menu.

```
DATA | EDIT | DISPLAY | UTILITY
TOOL                  LIST
 TOOL NO. : 00
 NAME  :TORCH1
 X      0.000 mm     Rx      0.00 deg.
 Y      0.000 mm     Ry      0.00 deg.
 Z      0.000 mm     Rz      0.00 deg.

 W      0.000 kg

 Xg     0.000 mm
!
```

***3** The display for the automatic measurement of the tool load and the center of gravity is shown.

```
DATA | EDIT | DISPLAY | UTILITY
W.GRAV.POS MEASURE   R1
 TOOL     :00
 R1:W     *.*** kg                 < STATUS >
                                  HOME  ○
    Xg    *.*** mm                 U     ○
    Yg    *.*** mm                 B     ○
    Zg    *.*** mm                 T(1)  ○
                                   T(2)  ○
                     REGISTER  CANCEL
!
```

***4** In a system with several manipulators or stations, use the page key to change the group to be controlled.

***5** Press [NEXT] once, and the manipulator moves to the home position (horizontal to the U-, B- and R-axes).

***6** Press [NEXT] again, and measurement starts. Keep the button pressed until measurement is completed. The manipulator moves in the order listed below. Once measurement is completed, "○" changes to "●".

① Measurement of the U-axis: U-axis home position + 4.5 degrees → -4.5 degrees
② Measurement of the B-axis: B-axis home position + 4.5 degrees → -4.5 degrees
③ First measurement of the T-axis: T-axis home position + 4.5 degrees → -4.5 degrees
④ Second measurement of the T-axis: T-axis home position +60 degrees → + 4.5 degrees → -4.5 degrees

NOTE

- The speed during measurement automatically changes to “Medium”.
- During measurement, “HOME” or “U” blinks on the screen.
- During measurement, the [NEXT] button has to be kept pressed. If the button is released during measurement or if it is released before “○“ changes into “●“, measurement is interrupted and the following message appears.

  “Stopped measurement”
  Measurement starts again from the first home position.

When all measurements are completed or when all the “○“ marks have changed into “●“, the measurements are displayed on the screen.

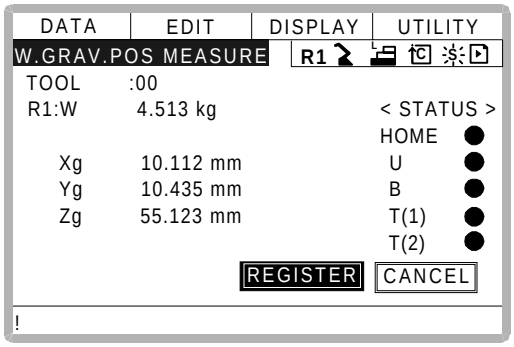

***7** The measurements are registered in the tool file, and the tool coordinates are shown. Select “CANCEL” to call up the tool coordinates without registering the measurements in the tool file.

3.10 User Coordinates Setting

3.10.1 User Coordinates

■ Definition of User Coordinates

User coordinates are defined by three points that have been taught to the manipulator through axis operations. These three defining points are ORG, XX, and XY, as shown in the diagram below. These three points of positional data are registered in a user coordinate file.

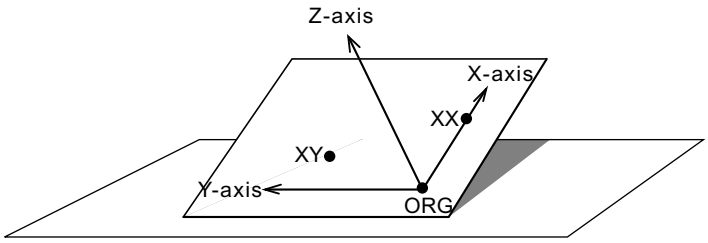

User coordinate definition point
ORG: Home position
XX: Point on the X-axis
XY: Point on the Y-axis

ORG is the home position, and XX is a point on the X-axis. XY is a point on the Y-axis side of the user coordinates that has been taught, and the directions of Y- and Z-axes are determined by point XY.

NOTE It is important that the two points ORG and XX be taught accurately.

■ User Coordinates File

Up to 24 kinds of user coordinates can be registered. Each coordinate has a user coordinate No. and is called a user coordinate file.

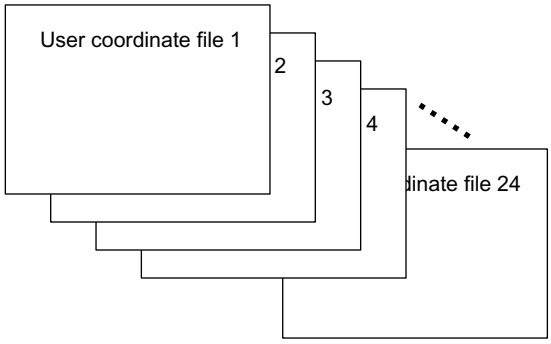

3.10.2 User Coordinates Setting

■ Selecting User Coordinates File

Operation

Select {ROBOT} under the top menu ➡ Select {USER COORDINATE}*1 ➡Select desired user coordinate number*2

Explanation

***1** The user coordinate list display is shown.

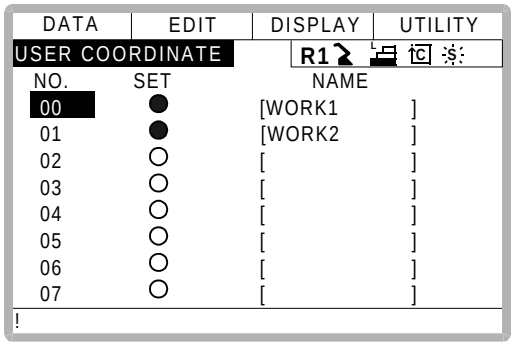

● indicates that the user coordinates is completed to set and ○ indicates that it is not completed.
To check the position of the user coodinates select {DISPLAY} → {COORDINATE DATA}. The user coordinate display is shown.

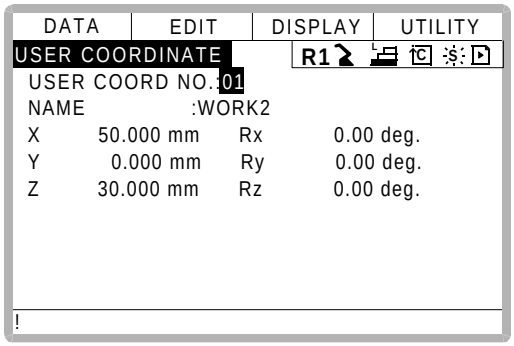

***2** Select the desired user coordinate number for setting in the user coordinate list display. The user coordinate teaching display is shown.

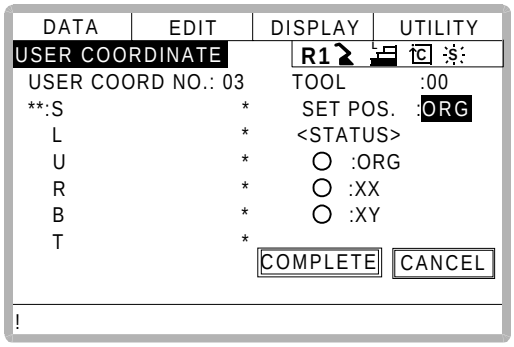

■ Teaching User Coordinates

Operation

Select the robot*1 ➡ Select “SET POS”*2 ➡ Move the manipulator using the axis key ➡ Press [MODIFY] and [ENTER]*3 ➡ Select “COMPLETE”*4

Explanation

***1** Select the robot for teaching user coordinates. (When the robot has already been selected or there is only one robot, this operation should not be performed.) Select “**” in the user coordinates setting display and select the robot in the displayed selection dialog. The robot is registered.

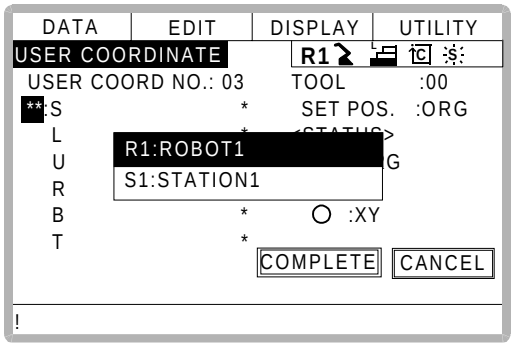

***2** The selection dialog is displayed. Select the teaching point.

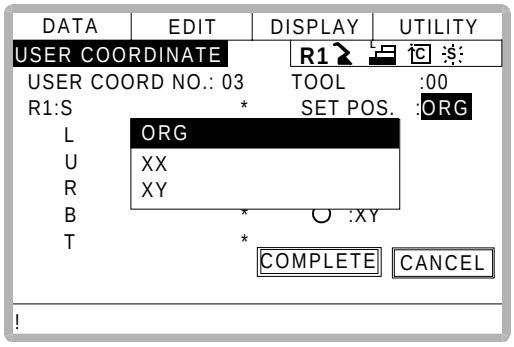

***3** Taught position is registered.
Repeat *2~*3 operation to teach ORG, XX andXY.
● indicates that teaching is completed and ○ indicates that it is not completed.

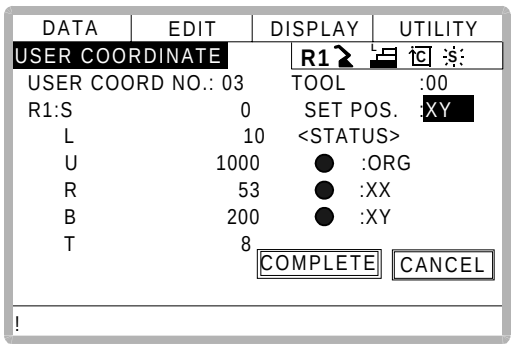

To check the taught positions, call up the required display among ORG to XY and press [FWD]. The manipulator moves to the set position.
If there is a difference between the current position of the manipulator and the displayed position data, “ORG”, “XX”, or “XY” flashes.

***4** User coordinates are registered in the file. Once the user coordinate setting is completed, the user coordinate list display is shown.

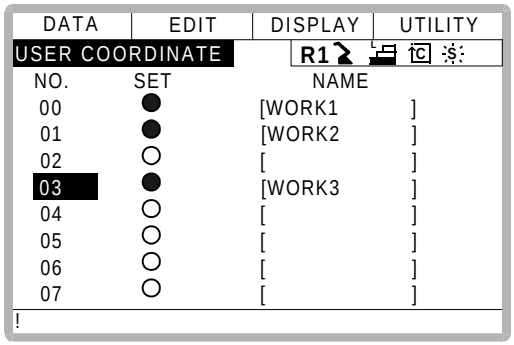

■ Clearing User Coordinates

Operation

Select {DATA} under the menu ➡ Select {CLEAR DATA}*1 ➡ Select “YES”*2

Explanation

***1** The confirmation dialog is shown.

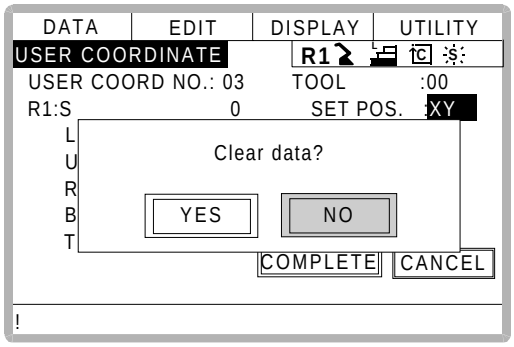

***2** All data is cleared.

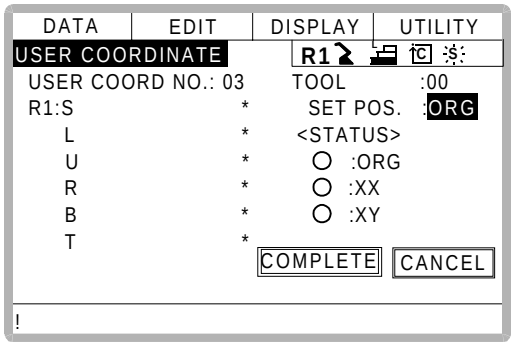

3.11 ARM Control

3.11.1 ARM Control

In XRC, the operation performance of the robot which satisfies various demands on the production site such as the improvement of the path accuracy and the cycle time shortening is achieved by adopting the ARM (Advanced Robot Motion) control which Yaskawa Electric Co., Ltd. originally developed.
The moment of inertia and the gravity moment etc. of each axis are calculated in the ARM control, and XRC controls robot motion according to it. It is necessary to set the Robot setup condition and the tool load information to request these accurately.
The robot setup condition is robot installation angle relative to ground and the weight and a center of gravity position of the load installed at each part of robot, etc.
The tool load information is weight, a center of gravity position, and moment of inertia at the center of gravity, of the tool installed at the flange.

It is necessary to set these information correctly to do a better operation control by the ARM control.

3.11.2 ARM CONTROL Display

In ARM CONTROL display, the robot setup condition etc. are set.

CAUTION

- **Set the robot setup condition exactly.**

  Set the robot setup condition very noting of mistake the unit, the value or the positive and negative of number.
  An appropriate operation control cannot be done, decrease the speed reducer longevity, or occur the alarm when these are not correctly set.

- **Confirm the operation path of robot of each job when you change setting.**

  Set the robot setup condition when you basically set up the robot.
  Confirm the operation path of robot of each job afterwards when you change the setting unavoidably.
  Injury or damage to machinery may result by collision between tool and jig because the operation path might be changed slightly when the setting about the ARM control is changed.

■ Robot Setup Condition

It is necessary to set the following robot setup condition to execute the ARM control appropriately.

- Robot installation angle
- S-head payload
- U-arm payload

Robot installation angle

The angle of the manipulator installed relative to ground is set in ANGLE REL. TO GROUND to calculate the gravity moment which loads to each axis of the manipulator.
The robot installation angle sets how much X axis of the robot coordinates has inclined with the earth around Y axis of the robot coordinates. The direction of + in the U axis operation from the home position posture of the manipulator becomes direction of + of the robot installation angle. Therefore, the robot installation angle for a vertical downward wall mount specification becomes -90 degrees.

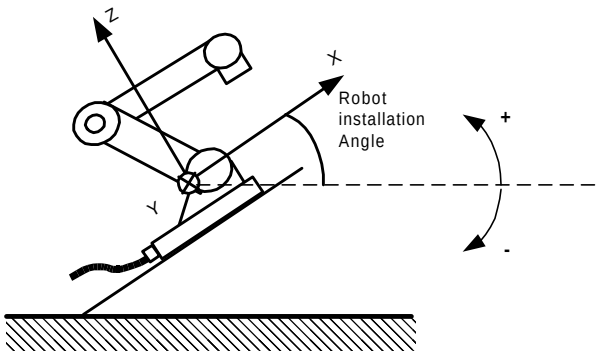

<Example>

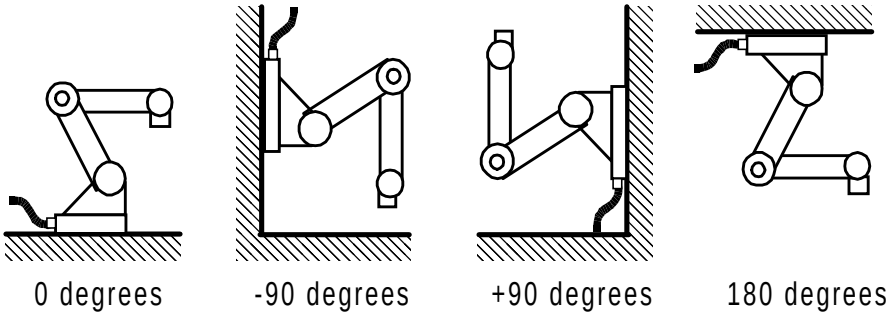

Because the gravity moment which loads to each axis can't be calculated correctly when this value is not correctly set, it can not be possible to control the manipulator appropriately. Set the value correctly. Especially, note the direction “+” or “-”.

NOTE

Only rotation angle around Y axis of the robot coordinates can be set in the robot installation angle.
Contact YASKAWA representative when robots is installed to incline Y axis of the robot coordinates relative to ground.

S-head payload

Set the mass and the center of gravity position roughly when the equipment such as transformer is installed at the S-head.
It is not necessary to set these value when there is no installed load at the S-head.

WEIGHT (Unit:kg)
The weight of the installed load is set.
Set a little large value though it does not care by a rough value. (Rase to a unit in each 0.5 to 1kg)
X (From S-Axis), Y (From S-Axis) (unit: mm)
The center of gravity position of the installed load is set by the distance in the direction of X and the direction of Y from S axis center here. It does not care by a rough value.
The direction of X and Y applies to the robot coordinates. The value is set by a negative number when the position is in “-” direction.

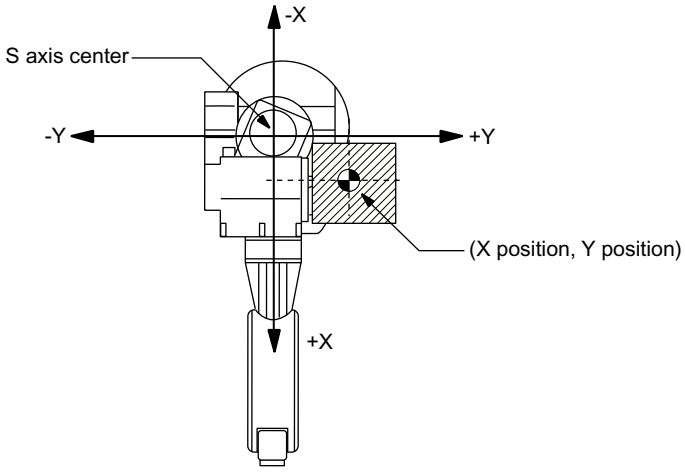

Load at S-head (Top View)

U-arm payload

Set the weight and the center of gravity position roughly when the equipment such as the wire supplying motors is installed on U arm.
A standard value is set when shipping from the factory.
Set the weight in “0” if there is no installing equipment on U arm.

WEIGHT (Unit:kg)
The weight of the installing load is set here.
Set a little large value though it does not care by a rough value. (Rase to a unit in each 0.5 to 1kg)
X (From U-Axis), HEIGHT (From U-Axis) (unit: mm)
The center of gravity position of the load installed is set here. It does not care by a rough value.
X (From U-Axis) is horizontal distance from U axis rotation center to the center of gravity position of the load. Set negative number when there is mass side in the back from U axis rotation center.

HEIGHT (From U-Axis) is height of the vertical direction from U axis rotation center to the center of gravity position of the load.

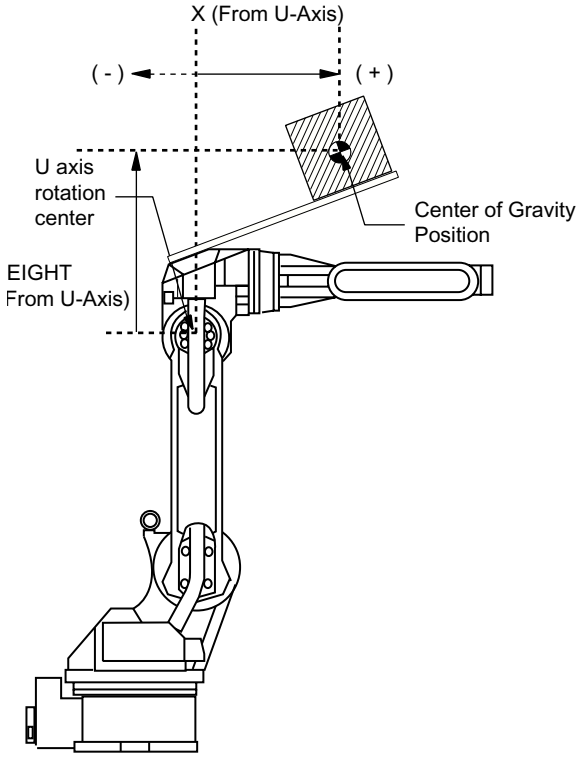

Load on U arm: Center of gravity position (Side View)

■ Setting

NOTE ARM CONTROL display is shown only when the security mode is set as management mode.

Operation

Select {ROBOT} under the top menu ➡ Select {ARM CONTROL}*1 ➡ Press the page key [▶] *2 ➡ Select the desired ite ➡ Input the value and press [ENTER]

Explanation

***1** ARM CONTROL display is shown.

```
DATA | EDIT | DISPLAY | UTILITY
ARM CONTROL                    R1
CONTROL GROUP:ROBOT1
<ROBOT SETUP CONDITION>
 ANGLE REL. TO GROUND      :  0.000 deg.
 S-HEAD PAYLOAD
   WEIGHT                  :  0.000 kg
   X(FROM S-AXIS)          :  0.000 mm
   Y(FROM S-AXIS)          :  0.000 mm
 U-ARM PAYLOAD
   WEIGHT                  :  20.000 kg
!
```

***2** Select the desired group axis when there are two or more group axes.

3.11.3 Tool Load Information Setting

CAUTION

- **Set the tool load information correctly.**

  The speed reducer longevity might decrease or the alarm might occur when the tool load information is not set correctly.

- **Confirm the operation path of robot of each job which uses the tool file after the tool load information is changed.**

  Set the tool load information basically before teaching the job after the tool is installed. Confirm the operation path of each job which uses the tool file when the tool load information is changed after teaching, unavoidably.
  Injury or damage to machinery may result by collision between tool and jig because the operation path might be changed slightly when the tool load information is changed.

■ Tool Load Information

Tool load information includes weight, a center of gravity position, and moment of inertia at the center of gravity of the tool installed at the flange. These are registered in the tool file.

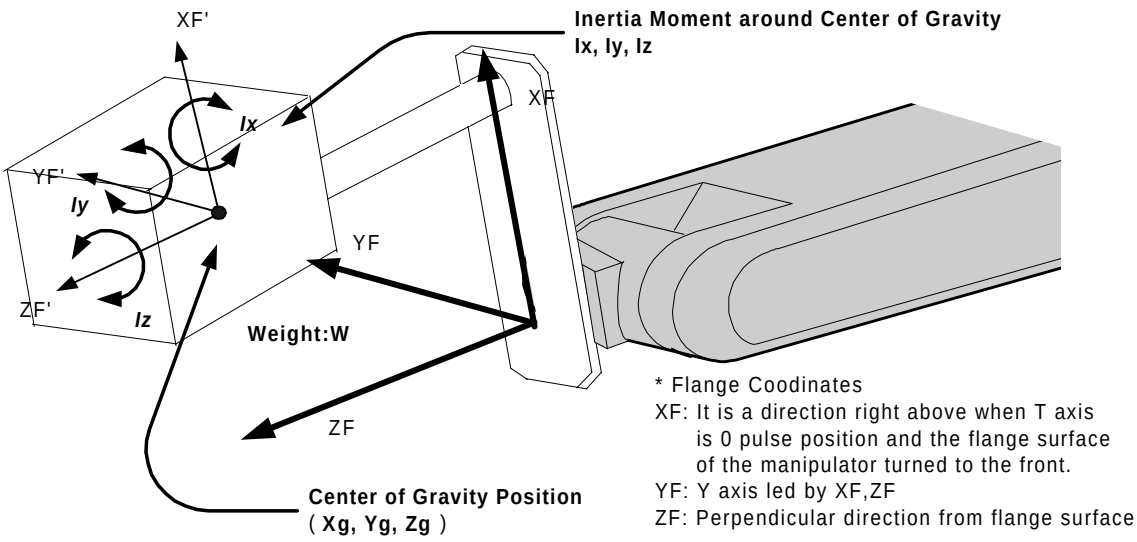

■ How to Calculate Tool Load Information

Weight: W (Unit:kg)

The total weight of the installing tool is set.
Set a little large value though it does not care by a rough value. Rase to a unit in each 0.5 to 1kg for small or middle robot and rase to a unit in each 1 to 5kg for large robot.

Center of gravity: xg, yg, zg (Unit: mm)

The center of gravity position of the installed tool is set as the position in the flange coordinates.
It does not care by setting a rough value because it is usually difficult to get a strict center of gravity position. Presume and set a center of gravity position roughly from outline of the tool.
Set the value when the center of gravity position of the installed tool is clear from specifications etc.

moment of inertia at the center of gravity: Ix, Iy, Iz (Unit: kg.m^2)

It is an moment of inertia of the tool at the center of gravity position.
The value is calculated around each axis of the coordinates which is in parallel to the flange coordinates and whichever original position is the center of gravity position of the tool.
Set a large value though it does not care by a rough value.

This setting is used to calculate the moment of inertia which loads to each axis of the manipulator. However, the moment of inertia at the center of gravity need not usually set because this data is small enough to the moment of inertia calculated from weight and the center of gravity position.
Only when the moment of inertia of the tool is large (The size of the tool is, as a standard, in

case of about twice or more the distance from the flange to the center of gravity position), this setting is needed.

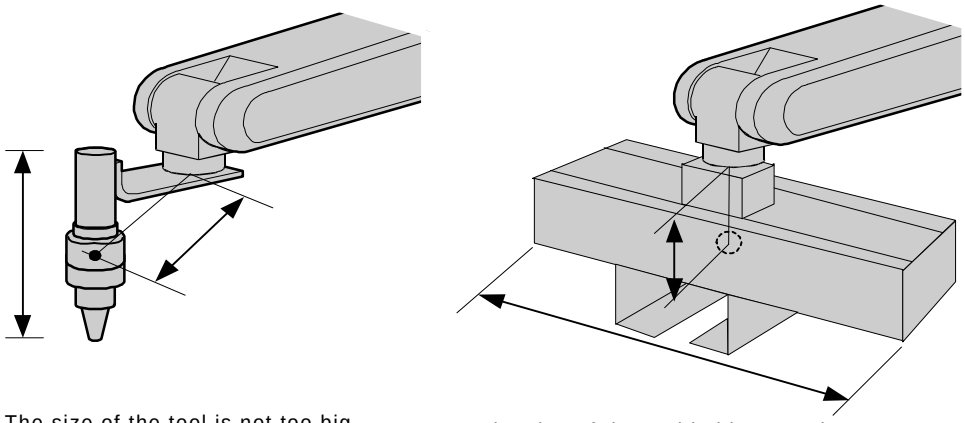

The size of the tool is not too big.
Setting the inertia moment at center of gravity is not necessary.

The size of the tool is big enough.
Setting the inertia moment at center of gravity is necessary.

Rough value of the moment of inertia at the center of gravity can be calculated by followings methods.

- Method to approximate the entire tool in hexahedron or cylinder.
- Method to calculate from each weight and center of gravity position of plural mass.

Refer to the following setting examples for details.

<Example1>

In the example of sealing gun of the figure below, it is assumed that there is center of gravity in the position where inclined to head from the center a little, and sets the center of gravity position on the flange coordinates.

There is no problem even if the moment of inertia at the center of gravity is not set because the size of the gun is not too large.

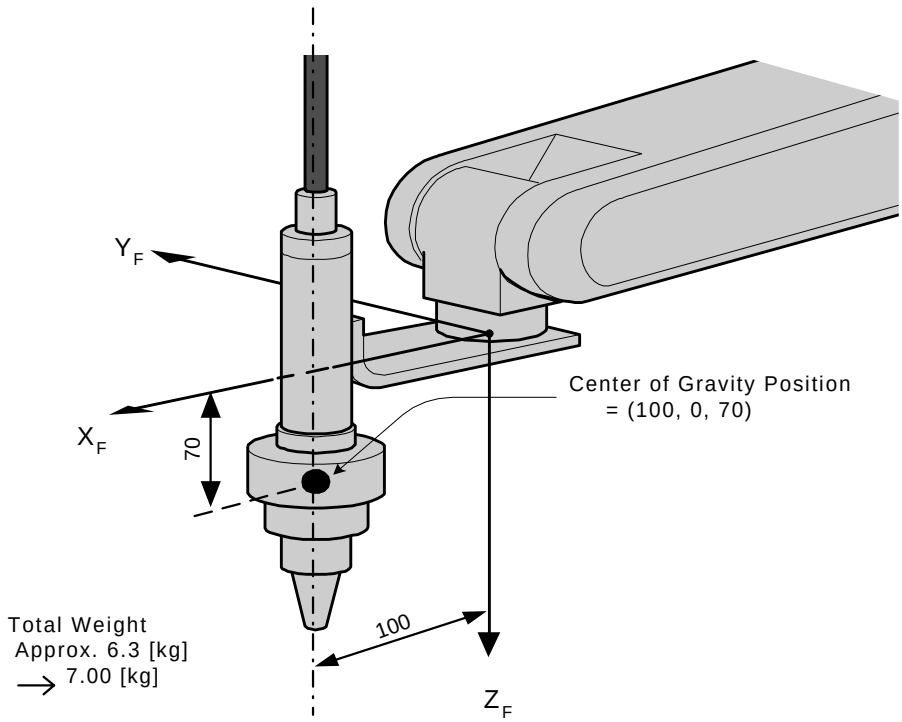

<Setting>

- W : 7.000 kg
- Xg : 100.000 mm
- Yg : 0.000 mm
- Zg : 70.000 mm
- Ix : 0.000 kg.m²
- Iy : 0.000 kg.m²
- Iz : 0.000 kg.m²

SUPPLE-MENT

• The own moment of inertia calculation for hexahedron and cylinder

The own moment of inertia of hexahedron and cylinder can be calculated by the next expression when the center of gravity is at the center.
Refer the expression when the calculation of the moment of inertia at the center of gravity.

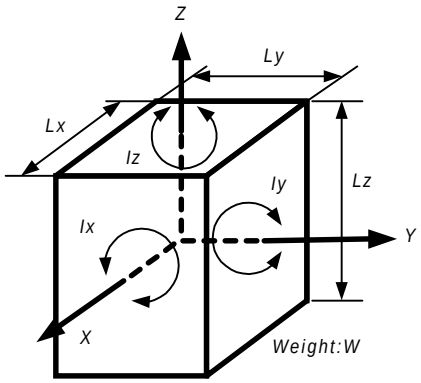

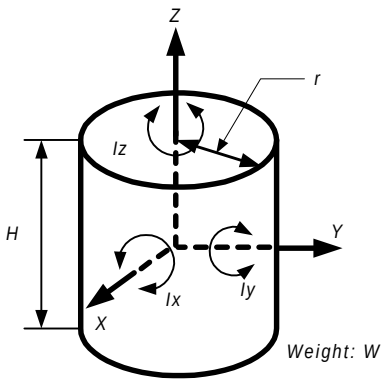

$$Ix = \frac{Ly^2 + Lz^2}{12} * W$$

$$Iy = \frac{Lx^2 + Lz^2}{12} * W$$

$$Iz = \frac{Lx^2 + Ly^2}{12} * W$$

$$Ix = Iy = \frac{3r^2 + H^2}{12} * W$$

$$Iz = \frac{r^2}{2} * W$$

* Unit of Weight : [kg]
* Unit of Length : [m]
* Unit of Ix, Iy, Iz : [kg.m^2]

<Example 2>

It is necessary to set the moment of inertia at the center of gravity when the entire size of the tool and workpiece is large enough comparing with the distance from the flange to the center of gravity position.

Calculate the moment of inertia at the center of gravity roughly from the expression (Refer to the above-mentioned supplement: "The own moment of inertia calculation for hexahedron and cylinder"), by approximating the entire tool in the shape of the hexahedron or the cylinder.

If the weight of held workpiece is greatly different like in the handling usage etc, it is more effective to set tool load information on each workpiece and to switch the tool on each step according to the held workpiece. Set the tool load information in the state to hold the heaviest workpiece when the tool is not switched.

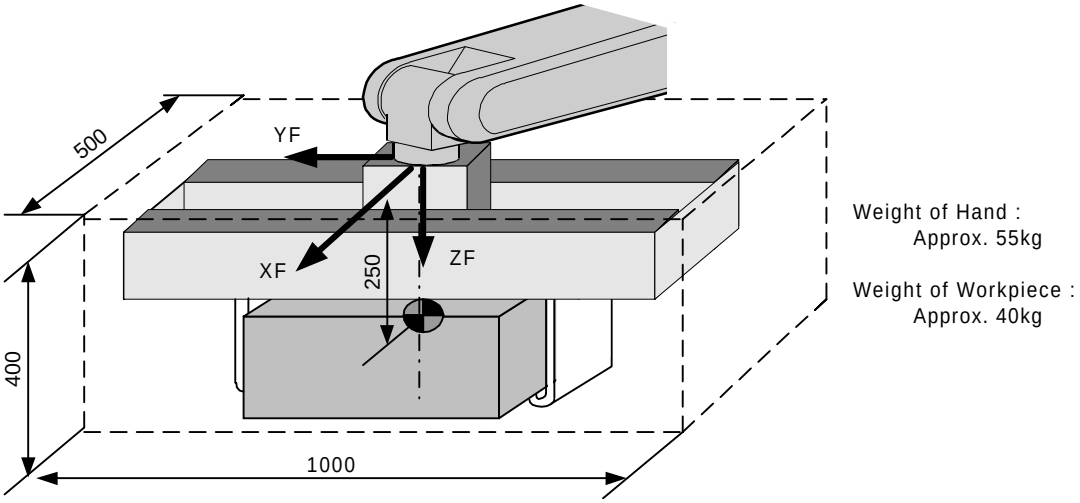

Weight: W = 55 + 40 = 95
= approx. 100[kg]

Center of gravity: Position at flange right under 250mm almost
(Xg, Yg, Zg) = (0,0,250)

Moment of inertia at the center of gravity:

The hexahedron of 0.500 x 0.400 x 1.000[m] which encloses the entire hand + workpiece is assumed.

By the expression to calculate the own moment of inertia of hexahedron,

$Ix = (Ly^2 * Lz^2 / 12) *$

$= ((0.400^2 + 1.000^2) / 12) * 100 = 9.667 =$ approx. 10.000

$Iy = (Lx^2 * Lz^2 / 12) * W = ((0.500^2 + 0.400^2) / 12) * 100 = 3.417 =$ approx. 3.500

$Iz = (Lx^2 * Ly^2 / 12) * W = ((0.500^2 + 1.000^2) / 12) * 100 = 10.417$

<Setting>

- W : 100.000 kg
- Xg : 0.000 mm
- Yg : 0.000 mm
- Zg : 250.000 mm
- Ix : 10.000 kg.m²
- Iy : 3.500 kg.m²
- Iz : 10.500 kg.m²

SUPPLE-MENT

• How to calculate "Center of gravity position" and "moment of inertia at center of gravity" for plural mass.

The center of gravity position and the moment of inertia at the center of gravity of the entire tool can be calculated by the weight and the center of gravity position of each mass when the tool can be thought that the tool consists of two or more big mass like the twin gun system etc.

1. Divide the tool into some parts as the weight and the center of gravity position can be roughly presumed. It is not necessary to divide in detail. The tool is approximated in construction of rough parts.
2. Calculate the weight and the center of gravity position of the each parts on flange coordinates. It does not care by a rough value. Calculate the own moments of inertia of the big parts. (If parts are small, it is not necessary to calculate the own moments of inertia. Refer to above-mentioned supplement: "The own moment of inertia calculation for hexahedron and cylinder" for how to calculate the own moment of inertia.)

   wi: Weight of the i-th parts [kg]
   (xi, yi, zi): Center of gravity of the i-th parts (On flange coordinates) [mm]
   Icxi, Icyi, Iczi: Own moments of inertia of the i-th parts [kg*m^2]

3. The center of gravity position of the entire tool is calculated by the next expression.

   xg = {w1 * x1 + w2 * x2 + ... + wi * xi} / (w1 + w2 + ... + wi)
   yg = {w1 * y1 + w2 * y2 + ... + wi * yi} / (w1 + w2 + ... + wi)
   zg = {w1 * z1 + w2 * z2 + ... + wi * zi} / (w1 + w2 + ... + wi)

4. The moment of inertia at the center of gravity position of the entire tool is calculated by the next expression.

$$
\begin{aligned}
Ix = & \{ w1 * ((y1 - yg)^2 + (z1 - zg)^2) * 10^{-6} + Icx1\} \\
+ & \{ w2 * ((y2 - yg)^2 + (z2 - zg)^2) * 10^{-6} + Icx2\} \\
& \ldots\ldots\ldots\ldots\ldots\ldots \\
+ & \{ wi * ((yi - yg)^2 + (zi - zg)^2) * 10^{-6} + Icxi\}
\end{aligned}
$$

$$
\begin{aligned}
Iy = & \{ w1 * ((x1 - xg)^2 + (z1 - zg)^2) * 10^{-6} + Icy1\} \\
+ & \{ w2 * ((x2 - xg)^2 + (z2 - zg)^2) * 10^{-6} + Icy2\} \\
& \ldots\ldots\ldots\ldots\ldots\ldots \\
+ & \{ wi * ((xi - xg)^2 + (zi - zg)^2) * 10^{-6} + Icyi\} \\
Iz = & \{ w1 * ((x1 - xg)^2 + (y1 - yg)^2) * 10^{-6} + Icz1\} \\
+ & \{ w2 * ((x2 - xg)^2 + (y2 - yg)^2) * 10^{-6} + Icz2\} \\
& \ldots\ldots\ldots\ldots\ldots\ldots \\
+ & \{ wi * ((xi - xg)^2 + (yi - yg)^2) * 10^{-6} + Iczi\}
\end{aligned}
$$

<Example 3>

When there is two or more big mass like the twin gun system like the figure below,

1. Set the center of gravity position when the center of gravity position of the entire tool is roughly understood, and set the moment of inertia at the center of gravity calculated by approximating the entire tool in the shape of hexahedron or cylinder. (It is enough in this setting usually)
2. Or, when weight in each mass and the center of gravity position are understood, the center of gravity position and the moment of inertia at the center of gravity of the entire tool can be calculated. (Refer to above-mentioned supplement: "How to calculate "Center of gravity position" and "moment of inertia at the center of gravity" for plural mass").

How by the method of 2 to calculate the value is shown here.

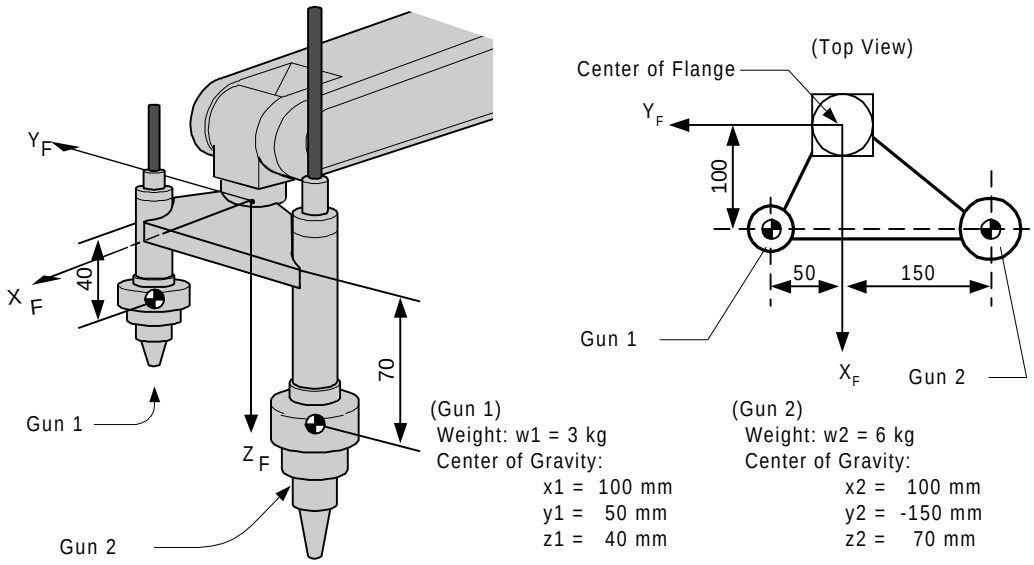

Weight: $W = w1 + w2$

$= 3 + 6 = 9$ = approx. 10[kg]

Center of gravity $Xg = (w1 * x1 + w2 * x2) / (w1 + w2)$

$= (3 * 100 + 6 * 100) / (3+6) = 100.0$ [mm]

$Yg = (3 * 50 + 6 * (-150)) / (3+6) = -83.333$ [mm]

$Zg = (3 * 40 + 6 * 70) / (3+6) = 60.0$ [mm]

The moment of inertia at the center of gravity position:

$$Ix = \{ w1 * ((y1 - Yg)^2 + (z1 - Zg)^2) * 10^{-6} + Icx1\}$$
$$+ \{ w2 * ((y2 - Yg)^2 + (z2 - Zg)^2) * 10^{-6} + Icx2\}$$
$$= 3 * ((50 - (-83))^2 + (40 - 60)^2) * 10^{-6}$$
$$+ 6 * (((-150) - (-83))^2 + (70 - 60)^2) * 10^{-6}$$
$$= 0.082 = \text{approx. } 0.100$$

$$Iy = 3 * ((100 - 100)^2 + (40 - 60)^2) * 10^{-6}$$
$$+ 6 * ((100 - 100)^2 + (70 - 60)^2) * 10^{-6}$$
$$= 0.002 = \text{approx. } 0.010$$

$$Iz = 3 * ((100 - 100)^2 + (50 - (-83))^2) * 10^{-6}$$
$$+ 6 * ((100 - 100)^2 + ((-150) - (-83))^2) * 10^{-6}$$
$$= 0.080 = \text{approx. } 0.100$$

* Here, the own moment of inertia (Icxi, Icyi, Iczi) of the gun is disregarded, because each gun are smaller enough than the entire tool.

<Setting>

- W : 10.000 kg
- Xg : 100.000 mm
- Yg : -83.333 mm
- Zg : 60.000 mm
- Ix : 0.100 kg.m^2
- Iy : 0.010 kg.m^2
- Iz : 0.100 kg.m^2

■ Tool load Information registering

Tool load Information is registered in the tool file.

Operation

Select {ROBOT} under the top menu ➡ Select {TOOL}*1 ➡ Select the desired tool number*2 ➡ Select the desired item to register and input the value *3 ➡ Press [ENTER]*4

Explanation

1 The tool list display is shown. Only when the file expansion function is valid, the tool list display is shown. When the file expansion function is invalid, the tool coordinates display is shown.

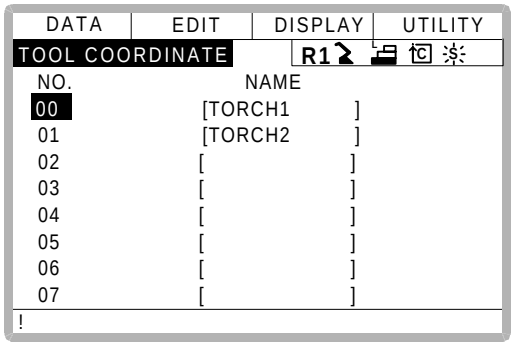

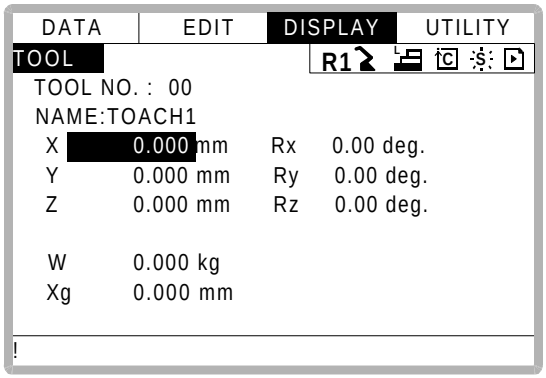

***2** Move the cursor to the number of the desired tool, and press [SELECT] in the tool list display. The tool coordinates display of the selected number is shown. Select the desired number with page key in the tool coordinates display.
Select { DISPLAY} → { LIST} or { DISPLAY} → {COORDINATE DATA} under the menu in order to switch between the tool list display and the tool coordinates display.

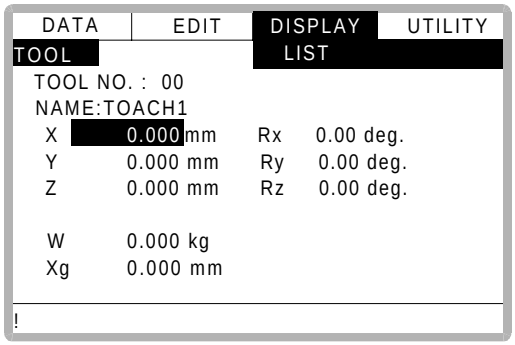

***3** The display can be scrolled by the cursor. The menu enters the state of a numeric input if the cursor is on the desired item to register and the [SELECT] is pressed.

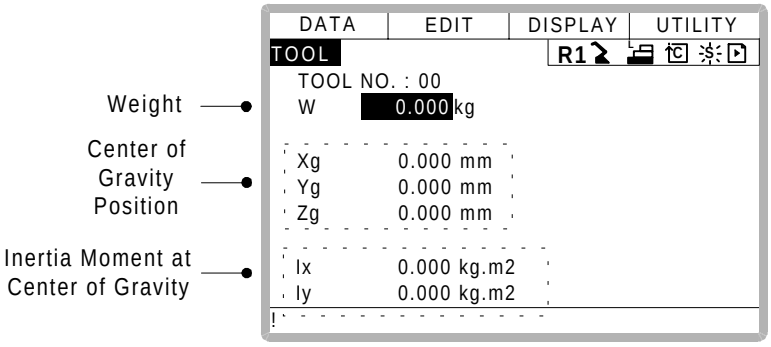

***4** The input value is registered. The servo power is automatically turned off when editing the value during the servo power turned on, and the message "Servo off by changing data " is displayed for three seconds.

NOTE

• When the data setting is not done

It is considered that data is not set correctly in tool load information in the following cases.

- When the weight (W) is "0".
- When the center of gravity position (Xg, Yg, Zg) are all “0”.

In these cases, the robot is controlled by using the standard parameter value (Differ in each robot model) which were set when shipping.

Standard Value.....Weight : W = Payload

Center of gravity position:

(Xg, Yg, Zg) = (0, 0, Allowed value of B axis for rated payload)

In this case, when an actual tool load is not too heavy, the manipulator can’t be performed enough.

Moreover, when the tool which an actual tool center of gravity position greatly offsets in X direction or Y direction is installed the generated moment by the tool cannot be compensated.

• Switch of the tool file

In case that two or more tool files are used, Information on an effective tool file is referred for tool load information used by the ARM control at that time in according to switch tool file.

Set the same value of tool load information in each tool file when the tool file is switched to change only tool center point (when neither the weight nor the center of gravity position of the entire tool installed in the flange is changed).

Moreover, set tool load information to the corresponding tool file respectively when total weight and the center of gravity position etc. of the tool is changed (when the system which exchange the tool by automatic tool changer).

3.12 Shock Detection Function

3.12.1 Shock Detection Function

The shock detection function is a function to decrease damage because of the collision by instantaneously detecting the shock and stopping the manipulator without any external sensor when the tool or the manipulator collide with peripherals.
When the shock is detected either in teach mode and in play mode, the manipulator is stopped instantaneously.

WARNING

This function cannot do away with the damage to peripherals completely. Moreover, this function does not guarantee safety to the person. Prepare the safety measures such as the safety fence etc. Refer to "MOTOMAN Setup Manual" for the safety measures in detail.

Injury or damage to machinery may result by collision with the manipulator.

NOTE

This function is equipped with the undermentioned model.
Applicable models: Motoman UP6, SK16X, UP20, SK45X, UP50, UP130

3.12.2 Shock Detection Function Setting

The shock detection function is set not to mis-detect the shock even if operating by the ratings load with the maximum speed when shipping from the factory. If tool load information is set correctly, the detection sensitivity can be improved. Moreover, it is possible to set the lower sensitivity of detection only for a specific section where the contact work etc. The sensitivity of detection is set by setting the detection level.

■ Shock Detection Level Setting

The shock detection level is set in the shock detection level file.
The shock detection set file are nine condition files as following figure.
Condition number 1 to 7 are used when the detection level is changed in a specific section in play mode.
Condition number 8 is a file used as standard in play mode. This function is operated by the detection level set in this file when playback operation.
Condition number 9 is a file for teach mode. The shock is detected by the detection level set in this file when the robot is operated in teach mode.

The detection level is changed by the SHCKSET instruction. After this instruction is executed, the shock will be detected by the detection level of the specified file when the condition number is specified at SHCKSET instruction. The detection level is returned to standard level when the SHCKRST instruction is executed.

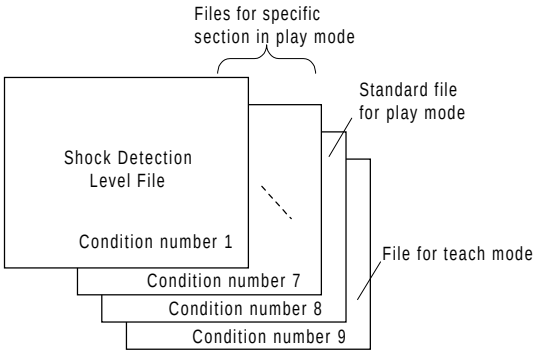

SUPPLE-MENT

The detection level of condition number 8 which is a standard file in play mode is adopted in play mode excluding the range between SHCKSET and SHCKRST in the job.

Method of Shock Detection Level File Setting

Operation

Select {ROBOT} under the top menu ➡ Select {SHOCK SENS LEVEL}*1 ➡ Select the desired condition number ➡ Select the desired item and set it

Explanation

***1** The shock detection level display is shown.

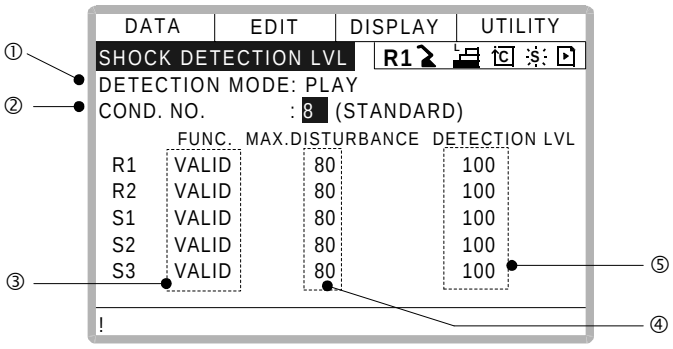

①Detection Mode

The shock detection mode is indicated.

②Condition Number (1 to 9)

1 to 7: For changing detection level in play mode
8 : For standard detection level in play mode
9 : For detection level in teach mode

Do either of the following operations to display the desired condition number.
When the desired condition number is input with a numeric key and the [ENTER] is pressed after the cursor is moved on the condition number and [SELECT] is pressed, the file of the selected condition number is displayed.

When page key is pressed the condition number file is changed.

③Function Select

VALID/INVALID of the shock detection function is specified here. The shock detection function is specified by each manipulator or each station axes which has this function.
The cursor is moved to the robot or the station axis which is desired to change the function "VALID" or "INVALID" and [SELECT] is pressed. "VALID" and "INVALID" is changed alternately whenever [SELECT] is pressed. The change of "VALID" or "INVALID" is effective for all the condition number files.

④Max. Disturbance Force

The maximum disturbance force to the manipulator when the manipulator is moved in play back operation or axis operation is shown here.
Refer to this value when the detection level in (5) is input.
The maximum disturbance force can be cleared by setting in menu {DATA} → {CLEAR MAX VALUE}.

⑤Detection Level (Level range: 1 to 500)

The shock detection level is specified here. Bigger value than the maximum disturbance force should be set.
The value (The detection level:100) not mis-detected the shock even if robot is operated at the maximum speed is set when shipping from the factory.
To change "Detection level", move the cursor to the robot or the station axis which is desired to change to appear the numeric input status and press [SELECT] moreover input the value by a numeric key and press [ENTER]. Set the level to small value to raise the detection sensitivity or set the level to large value to lower sensitivity.

NOTE

Set the level 20% or more greatly than the maximum disturbance force for the mis-detection prevention when the manipulator works.
Instantly stopping the manipulator by mis-detection may become a factor to damage the speed reducer or the tool.

<Example>
When the maximum disturbance force is 80, set the detection level 96 or more.

NOTE

"Detection level" can be changed only when the security mode is set as management mode.

■ Tool load Information Setting

To be the more accurate shock detection, the tool load information is set in the tool file.

> SUPPLE-MENT
> Refer to " 3.11.3 Tool Load Information Setting " for details concerning the tool load information setting.

Method of the Tool load Information Setting

Operation

Select {ROBOT} under the top menu ➡ Select {TOOL}*1 ➡ Select the desired tool number*2 ➡ Select the desired item and set it

Explanation

*1 Tool list display is shown. Only when the file expansion function is valid, the tool list display is shown. When the file expansion function is invalid, the tool coordinates display is shown.

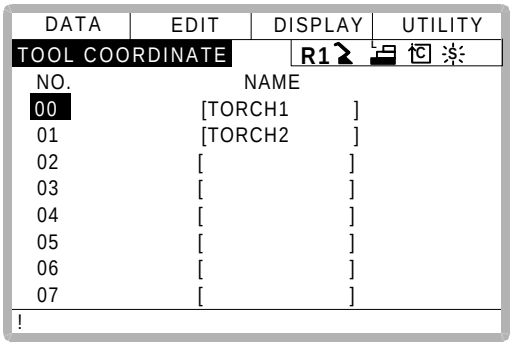

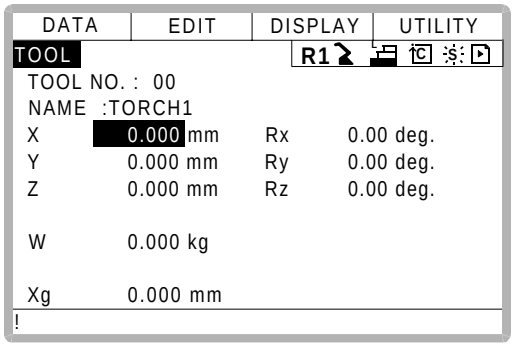

*2 Move the cursor to the number of the desired tool and press [ENTER] in the tool list display. The tool coordinates display of the selected number is shown. Select the desired number with page key in the tool coordinates display.
Select { DISPLAY} → { LIST} or { DISPLAY} → {COORDINATE DATA} under the menu in order to switch between the tool list display and the tool coordinates display. The tool coordinates display is scrolled by the cursor.

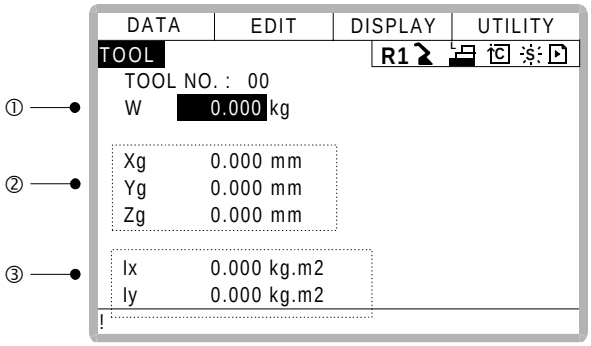

①Weight

This is total weight of the installed tool.
Input weight by a numeric key and press [ENTER] after the numeric input status is appeared by moving the cursor and pressing [SELECT].

②Center of Gravity Position

This is center of gravity position of the installed tool. The value are specified by the coordinates value on each axis of the flange coordinates. Input the center of gravity position by a numeric key and press [ENTER] after the numeric input status is appeared by moving the cursor and pressing [SELECT].

③Moment of inertia at the Center of Gravity

This is Moment of inertia of the tool at the Center of Gravity in (2). The values are specified around each axis of the coordinates that are in parallel to the flange coordinates and where the original point is the center of gravity position.
Input the moment of inertia by numeric key and press [ENTER] after the numeric input status is appeared by moving the cursor and pressing [SELECT].

■ Instruction of Shock Detection Function

SHCKSET instruction

The SHCKSET instruction changes the shock detection level to the value set in the shock detection level file during play back operation.
The additional items of the SHCKSET instruction are as follows.

SHCKSET R1 SSL#(1)
① ②

①Robot / Station Setting

The robot or the station axis which is desired to change the shock detection level is specified. If nothing is specified, the detection level of the control group of the job to which this instruction is registered is changed.
However, if the job is coordinated job, the detection level of the slave axis group is changed.

②Shock Detection Level File (1 to 7)

The shock detection level file number is specified here. The detection level value when playback operation is set in the file. The detection level is changed by the condition of the file set here.

SHCKRST instruction

The shock detection level changed by the SHCKSET instruction is reset and returned to the detection level of the standard (value set in condition number 8) by the SHCKRST instruction. The additional item of the SHCKRST instruction is as follows.

```
SHCKRST R1
        |
        ①
```

①Robot / Station Setting

The robot or the station axis which is desired to reset the shock detection level is specified here. If nothing is specified, the detection level of the control group of the job to which this instruction is registered is changed.
However, if the job is coordinated job, the detection level of the slave axis group is changed.

Instruction Registration

The instruction is registered when the cursor is in the address area in the job content display in teach mode.

Operation

Select {JOB} under the top menu ➡ Select {JOB} ➡ Move the cursor in the address area

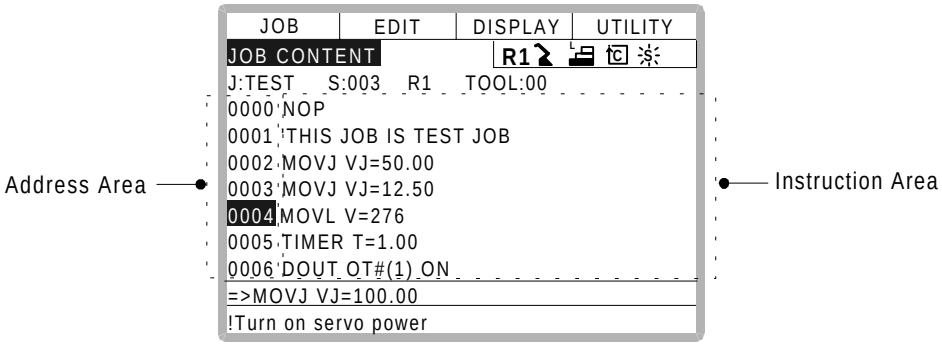

SHCKSET

Operation

Move the cursor to the line just before the location where SHCKSET instruction is desired to register ➡ Press [INFORM LIST]*1 ➡ Select SHCKSET instruction *2 ➡ Change the value of additional item and numerical data*3 ➡ Press [ADD] and [ENTER]*4

Explanation

1 The inform list dialog is shown.

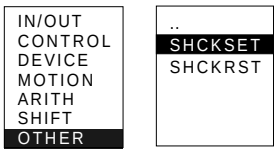

2 SHCKSET instruction is displayed in the input buffer line.

```
=> SHCKSET SSL#(1)
```

3 < When register as it is >
Operate *4 procedure when the instruction the input buffer line as it is should be registered.

< When add or change the additional item >

- When the shock detection level file is changed, move the cursor to the shock detection level file number, and increase or decrease the file number by pressing about [SHIFT] and the cursor key simultaneously.

```
=> SHCKSET SSL#(2)
```

When the value is input with the numerical key, press [SELECT] to display the input buffer line.

```
=>SHCKSET SSL#(1)
>Shock_sens_file_no.=
```

And press [ENTER] to change the number in the input buffer line.

- When robot/station specification is added, move the cursor to the instruction in the input buffer line and press [SELECT] to show the detail edit display.

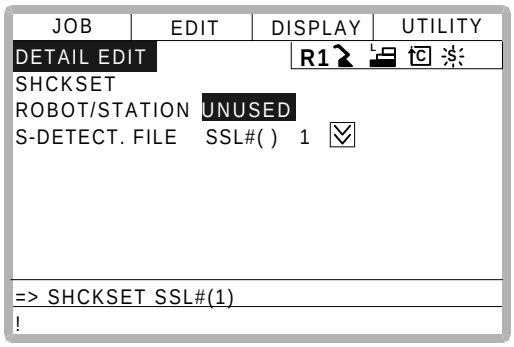

Move the cursor to "UNUSED" of "ROBOT/STATION", and press [SELECT]. The selection dialog is shown. Move the cursor to added robot or station and press [SELECT].

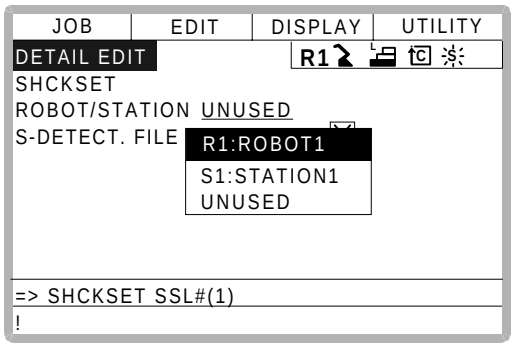

When the addition of robot/station ends, press [ENTER]. The detail edit display shuts and the job content display is shown.

4 The instruction displayed in the input buffer line is registered.

SHCKRST

Operation

Move the cursor to the line just before the location where SHCKRST instruction is desired to register ➡ Press [INFORM LIST]*1 ➡ Select SHCKRST instruction *2 ➡ Change the value of additional ite *3 ➡ Press [ADD] and [ENTER]*4

Explanation

1 The inform list dialog is shown.

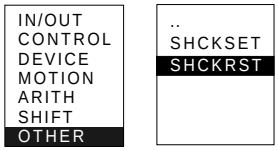

***2** SHCKRST instruction is displayed in the input buffer line.

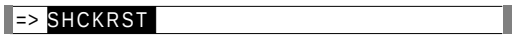

***3** < When register as it is >
Operate *4 procedure when the instruction the input buffer line as it is should be registered.

< When add or change the additional item >
When robot/station specification is added, move the cursor to the instruction in the input buffer line and press [SELECT] to show the detail edit display.

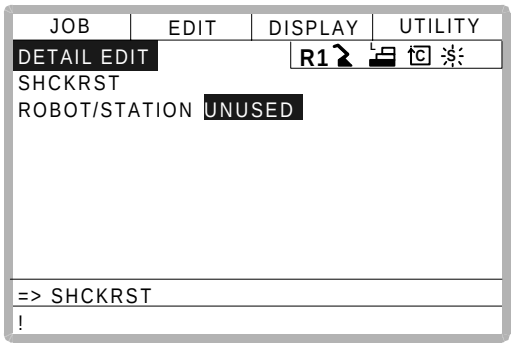

Move the cursor to "UNUSED" of "ROBOT/STATION", and press [SELECT]. The selection dialog is shown. Move the cursor to added robot or station and press [SELECT].

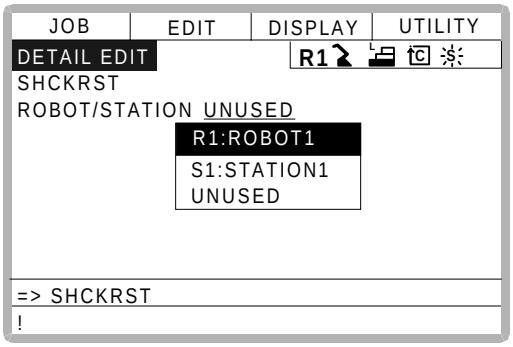

When the addition of the robot/the station ends, press [ENTER]. The detail edit display shuts and the job content display is shown.

***4** The instruction displayed in the input buffer line is registered.

■ Reset Shock detected

When the tool and the manipulator are collided with peripherals and it is detected by the shock detection function, the manipulator is stopped in the instantaneously with alarm output. At this time, the shock detection alarm is displayed.

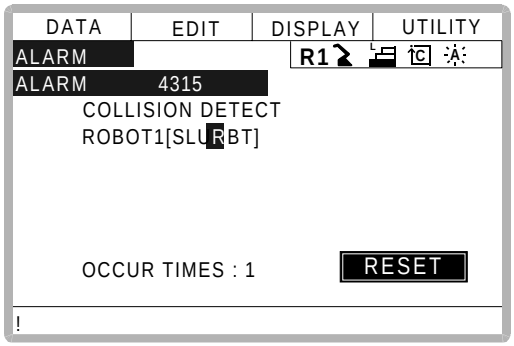

The shock detection alarm in teach mode and play mode can be reset by the following operation.

Operation

Press [SELECT]*1 ➡ Operation after resetting the detection status*2

Explanation

***1** The alarm is reset when "RESET" is selected on the alarm display, and the shock detection status is released.

***2** In teach mode, the JOG operation of the manipulator becomes possible again after resetting. In play mode, confirm the damage after moving the manipulator to the safety position once with teach mode though the playback operation is possible after resetting.

NOTE

When manipulator was stopped instantaneously while having contact with the object and the detection alarm is tried to reset on the alarm display, the situation in which the alarm cannot be reset might be occurred because the collision might be detected again after resetting.
In this case, set the collision detection function "INVALID" with the shock detection level file or enlarge the detection level in teach mode and move the manipulator to safety position.

3.12.3 Alarm List

Alarm Number	Message	Cause	Remedy
4315	COLLISION DETECT Robot/Station [Axis Data]	• A collision from interference between robot and peripheral device etc. was detected. • The collision was mis-detected by the normal movement of the robot, because the detection level was small.	• Remove the object after resetting the alarm or move the robot to the safety position. • When the alarm cannot be reset because the robot comes in contact with the object, invalidate this function in the collision detection level set file or enlarge the detection level and move the robot to the safety position. • Enlarge the detection level so as not to mis-detect the collision detection by the normal movement of the robot. Moreover, set accurate information of the weight of the tool.

3.13 Instruction Level Setting

3.13.1 Setting Contents

■ Instruction Set

There are three instruction sets that can be used when registering the instructions for the robot language (INFORM II): the subset instruction set, the standard instruction set, and the expanded instruction set.

Subset Instruction Set

The instructions displayed in the instruction list are limited to just those that are most frequently used, reducing the number of instructions that can be registered. Since few instructions are displayed, selection and input are simple.

Standard Instruction Set / Expanded Instruction Set

All the INFORM II instructions can be used. The number of additional items to be used in each instruction differ in the standard instruction set and expansion instruction set.
In the standard instruction set, the following functions cannot be used. However, operation becomes easier because the number of data items decreases when registering an instruction.

- Use of local variables and arrangement variables
- Use of variables for additional items (Example: MOVJ = 1000)

When instructions are executed, for example during playback, all the instructions can be executed regardless of the instruction set used.

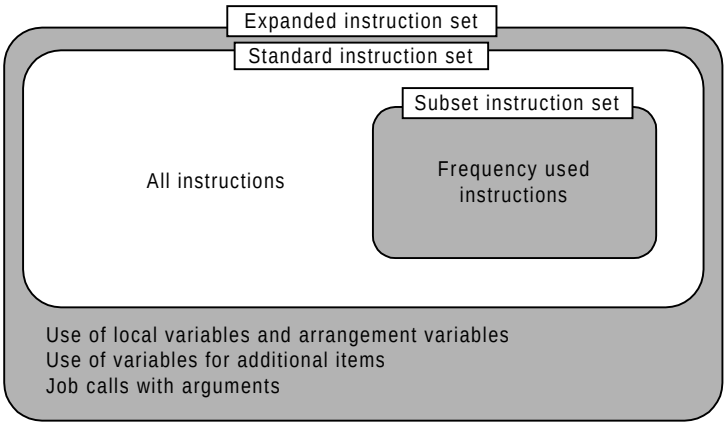

■ Learning Function

When an instruction is entered from the instruction list, the additional items that were entered last time are also displayed. This function can simplify instruction input.
To register the same additional items as those in the former operation, register them without changing.

Register an instruction ➡

```
0003 WAIT IN#(1)=ON
0004 END
```

①An instructions are registered

The instruction and the additional items that were entered last time are displayed ➡

```
=> WAIT IN#(1)=ON
!
```

②The next time an attempt is made to register the same instruction as in 1, the same additional items as were registered last time are also displayed in the input buffer line.

3.13.2 Setting Instruction Set Level Operation

Operation

Select {SETUP} under the top menu ➡ Select {TEACHIG COND}*1 ➡ Select "LANGUAGE LEVEL"*2 ➡ Select desired language level *3

Explanation

***1** The teaching condition display is shown.

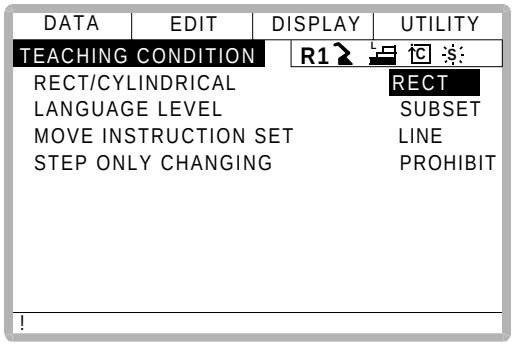

***2** The selection dialog is displayed.

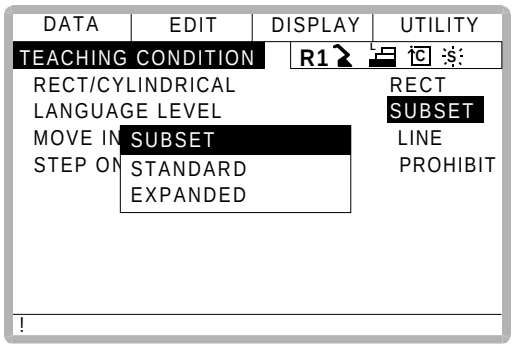

3 Language level is set.

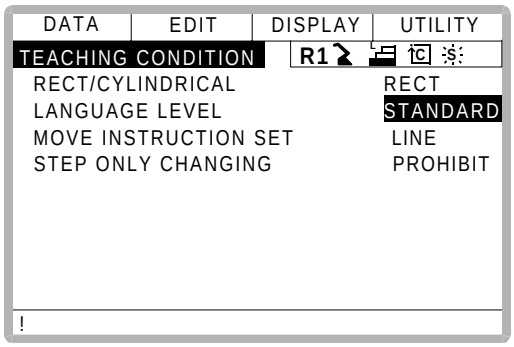

3.14 Number Key Customize Function

3.14.1 What is the Number Key Customize Function?

With this function, the user can change the function of an application that has been allocated to the number keys of the programming pendant.
Since any frequently used operation can be allocated to a number keys on the programming pendant, decreasing the number of key operations reduces the teaching time.

NOTE The Number Key Customize Function is only valid when the security mode is set to the management mode.

3.14.2 Allocatable Functions

There are two allocation methods as follows:

- Key Allocation (EACH)
- Key Allocation (SIM)

■ Key Allocation (EACH)

With key allocation (EACH), the manipulator operates according to the allocated function when the number key is pressed. The following shows the functions that can be allocated.

Function	Description
Manufacturer allocation	Allocated by Yaskawa. Allocating another function invalidates the function allocated by the manufacturer.
Instruction allocation	Allocates any instructions assigned by the user.
Job call allocation	Allocates job call instructions (CALL instructions). The jobs to be called are only those registered in the reserved job names. (Specify it by the registration No.)
Display allocation	Allocates any displays assigned by the user. It functions the same as the reserved display call function.

■ Key Allocation (SIM)

With key allocation (SIM), the manipulator operates according to the allocated function when the [INTERLOCK] and the number key are pressed at the same time. The following shows the functions that can be allocated.

Function	Description
Alternate output allocation	Turns ON/OFF the specified general output signal when [INTERLOCK] and the allocated number key are pressed at the same time.
Momentary output allocation	Turns ON the specified general output signal when [INTERLOCK] and the allocated number key are pressed at the same time.
Pulse output allocation	Turns ON the specified output signal only for the specified period when [INTERLOCK] and the allocated number key are pressed at the same time.
Group output allocation (4-bit/8-bit)	Sends the specified output to the specified general group output signals when [INTERLOCK] and the allocated number key are pressed at the same time.
Analog output allocation	Sends the specified voltage to the specified output port when [INTERLOCK] and the allocated number key are pressed at the same time.
Analog incremental output allocation	Sends the voltage increased by the specified value to the specified output port when [INTERLOCK] and the allocated number key are pressed at the same time.

SUPPLEMENT In a system for multiple applications, a number key can be allocated for each application.

3.14.3 Allocating an Operation

■ Allocation Display

Operation

Select {SETUP} under the menu ➡ Select{KEY ALLOCATION}*1 ➡ Select {DISPLAY}*2 ➡Select {ALLOCATE SIM. KEY} *3

Explanation

1 The key allocation (EACH) display is shown.

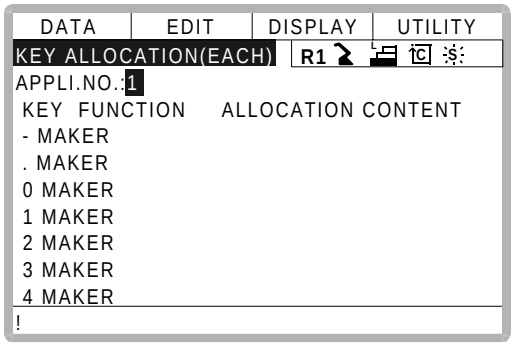

2 The pull-down menu is displayed. To call up the key allocation (SIM) display, select {ALLOCATE SIM. KEY}.

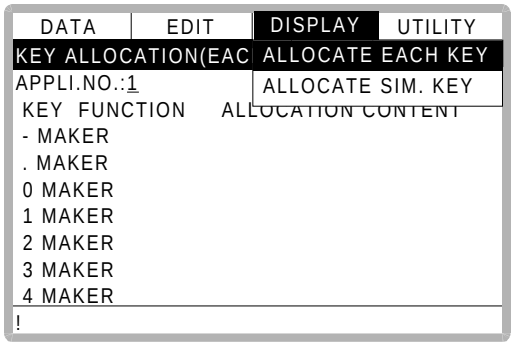

3 The key allocation (SIM) display is shown.

In a system multiple applications, press the page key to change the display to the allocation display for each application.

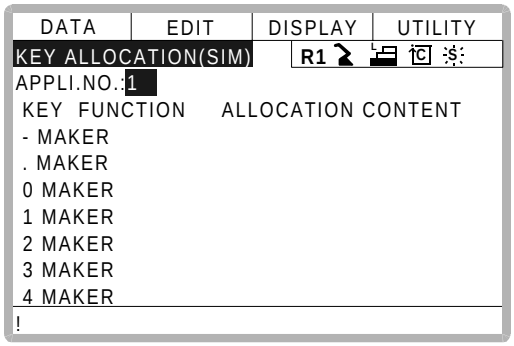

■ Instruction Allocation

Use this function in the key allocation (EACH) display.

Operation

Move the cursor to “FUNCTION” of the key to be allocated ➡ Press [SELECT]*1 ➡ Select “INSTRUCTION”*2

Explanation

1 The selection dialog box is shown.

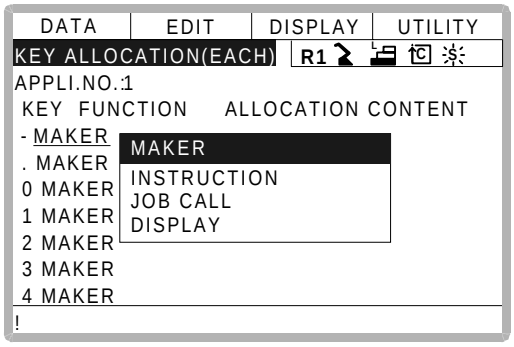

2 The instruction is displayed in the “ALLOCATION CONTENT”.

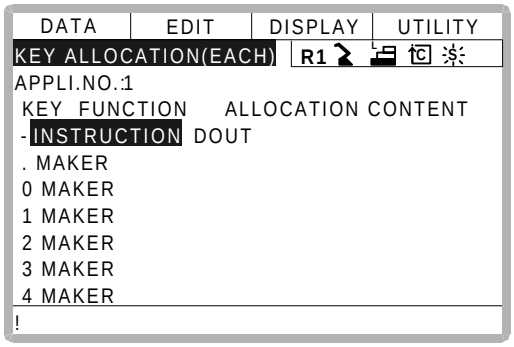

To change the instruction, move the cursor to the instruction and press [SELECT]. Then the instruction group list dialog box is displayed. Select the group containing the instruction to be changed.

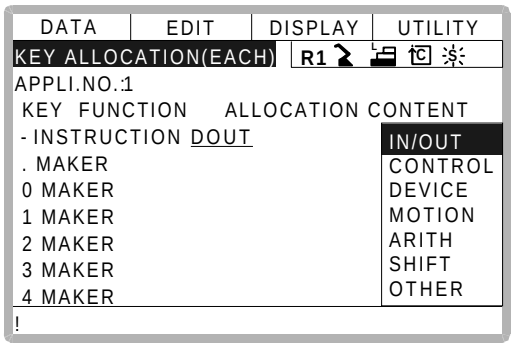

When the instruction list dialog box is displayed, select the instruction to be changed.

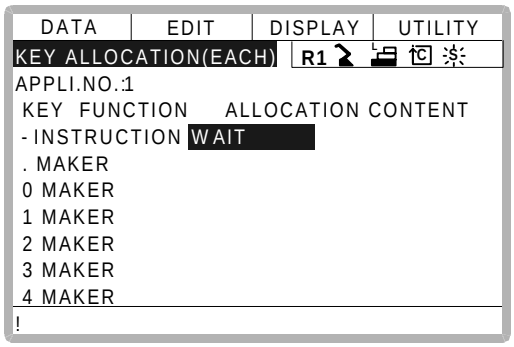

■ Job Call Allocation

Use this function in the key allocation (EACH) display.

Operation

Move the cursor to the “FUNCTION” of the key to be allocated ➡ Press [SELECT]*1 ➡ Select “JOB CALL”*2

Explanation

***1** The selection dialog box is displayed.

***2** The reserved job registration No. is displayed in the “ALLOCATION CONTENT” (reserved job registration No.: 1 to 10).

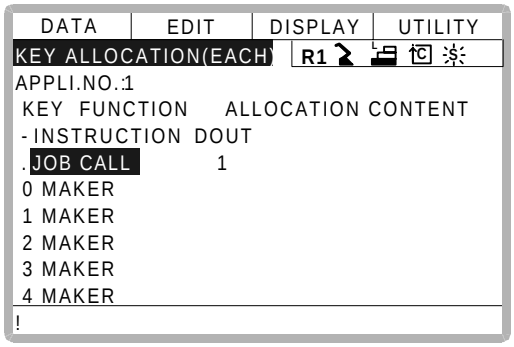

To change the reserved job registration No., move the cursor to the No. and press [SELECT]. Numeric values can now be entered. Input the number to be changed, and press [ENTER].

■ Display Allocation

Use this function is used in the key allocation (EACH) display.

Operation

Move the cursor to the “FUNCTION” of the key to be allocated ➡ Press [SELECT]*1 ➡ Select “DISPLAY” ➡ Move the cursor to “ALLOCATION CONTENT” ➡ Press [SELECT]*2 ➡ Input the name of the reserved display and press [ENTER]*3 ➡ Open the display for allocation ➡ Press [INTERLOCK] and the allocated key at the same time*4

Explanation

***1** The selection dialog box is displayed.

***2** The character input status is entered.

***3** The reserved name input to the “ALLOCATION CONTENT” is displayed.

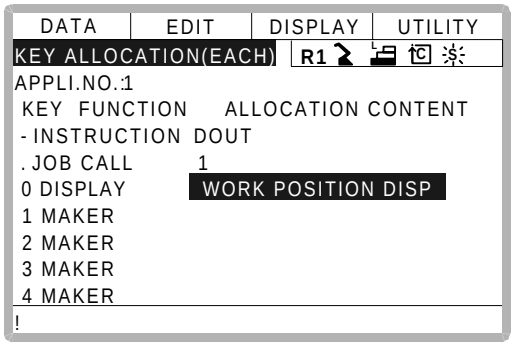

***4** A message “Reserved display registered” is displayed, and the display is registered.

NOTE The display allocation functions the same as the reserved display call function. Only one display can be allocated to a key.

■ Alternate Output Allocation

Use this function is used in the key allocation (SIM) display.

Operation

Move the cursor to the “FUNCTION” of the key to be allocated ➡ Press [SELECT]*1 ➡ Select “ALTERNATE OUTPUT”*2

Explanation

***1** The selection dialog box is displayed.

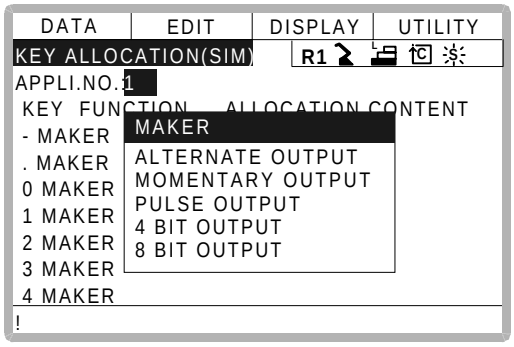

***2** The output No. is displayed in the “ALLOCATION CONTENT”.

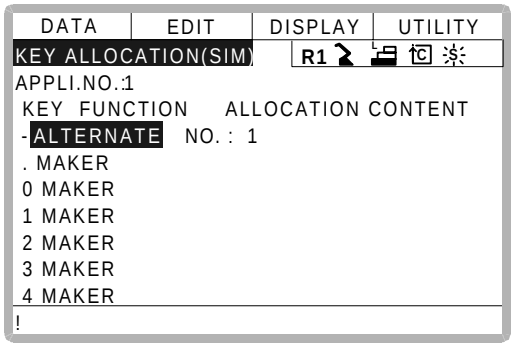

To change the output No., move the cursor to the No. and press [SELECT]. Numeric values can now be entered. Input the number to be changed, and press [ENTER].

■ Momentary Output Allocation

Use this function in the key allocation (SIM) display.

Operation

Move the cursor to the “FUNCTION” of the key to be allocated ➡ Press [SELECT]*1 ➡ Select “MOMENTARY OUTPUT”*2

Explanation

***1** The selection dialog box is displayed.

***2** The output No. is displayed in the “ALLOCATION CONTENT”.

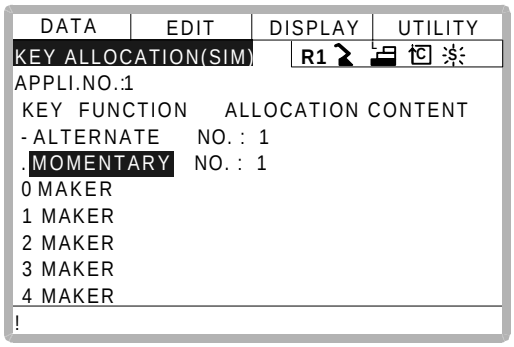

To change the output No., move the cursor to the No. and press [SELECT]. Numeric values can now be entered. Input the number to be changed, and press [ENTER].

■ Pulse Output Allocation

Use this function in the key allocation (SIM) display.

Operation

Move the cursor to the “FUNCTION” of the key to be allocated ➡ Press [SELECT]*1 ➡ Select “PULSE OUTPUT”*2

Explanation

***1** The selection dialog box is displayed.

***2** The output No. and output time are displayed in the “ALLOCATION CONTENT”.

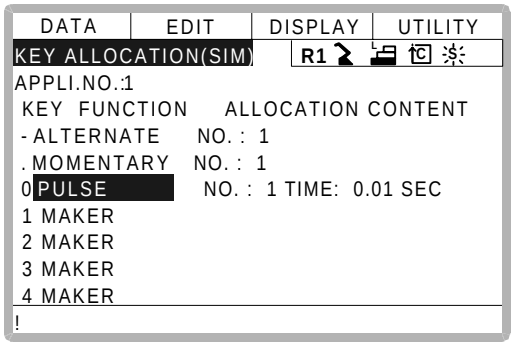

To change the output No. or output time, move the cursor to the No. or time and press [SELECT]. Numeric values can now be entered. Input the number or time to be changed, and press [ENTER].

■ Group (4-bit/8-bit) Output Allocation

Use this function in the key allocation (SIM) display.

Operation

Move the cursor to the “FUNCTION” of the key to be allocated ➡ Press [SELECT]*1 ➡ Select “4 BIT OUTPUT” or “8 BIT OUTPUT”*2

Explanation

***1** The selection dialog box is displayed.

***2** The output No. and output value are displayed in the “ALLOCATION CONTENT”.

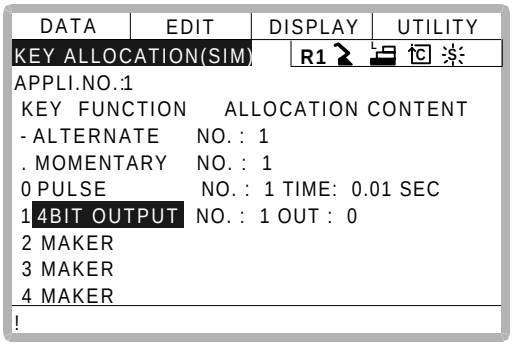

To change the output No. or output value, move the cursor to the No. or value and press [SELECT]. Numeric values can now be entered. Input the number or value to be changed, and press [ENTER].

■ Analog Output Allocation

Use this function in the key allocation (SIM) display.

Operation

Move the cursor to the “FUNCTION” of the key to be allocated ➡ Press [SELECT]*1 ➡ Select “ANALOG OUTPUT”*2

Explanation

***1** The selection dialog box is displayed.

***2** The output port number and the output voltage value are displayed in the “ALLOCATION CONTENT”.

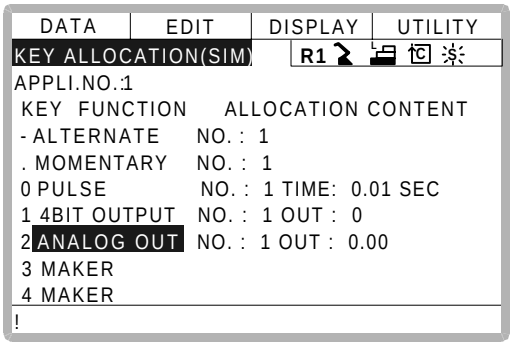

To change the output port No. or output voltage value, move the cursor to the No. or voltage value and press [SELECT]. Numeric values can now be entered. Input the number or voltage value to be changed, and press [ENTER].

■ Analog Incremental Output Allocation

Use this function in the key allocation (SIM) display.

Operation

Move the cursor to the “FUNCTION” of the key to be allocated ➡ Press [SELECT]*1 ➡ Select “ANALOG INC OUTPUT”*2

Explanation

***1** The selection dialog box is displayed.

***2** The output port No. and incremental value are displayed in the “ALLOCATION CONTENT”.

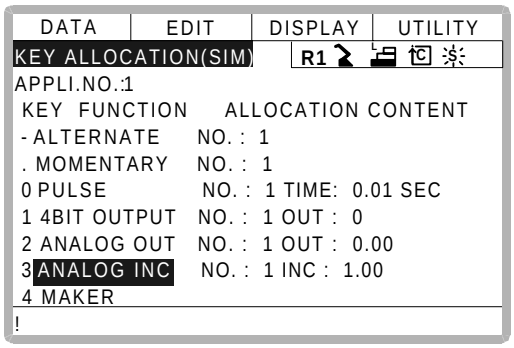

To change the output port No. or incremental value, move the cursor to the No. or incremental value and press [SELECT]. Numeric values can now be entered. Input the number or incremental value to be changed, and press [ENTER].

3.14.4 Allocation of I/O Control Instructions

With key allocation (SIM), output control instructions can be allocated to the number keys that have been allocated one of the following I/O controls key allocation (EACH).

Function	Output Control Instruction To Be Allocated
Alternate output allocation	DOUT OT# (No.) ON
Momentary output allocation	
Pulse output allocation	PULSE OT# (No.) T = output time
Group output allocation (4-bit)	DOUT OGH (No.) output value
Group output allocation (8-bit)	DOUT OG# (No.) output value
Analog output allocation	AOUT AO# (No.) output voltage value

Operation

Move the cursor to the “FUNCTION” of the key that has been allocated with I/O control with key allocation (SIM) ➡ Press [SELECT] *1 ➡ Select “OUTPUT CONTROL INST”*2

Explanation

***1** The selection dialog box is displayed.

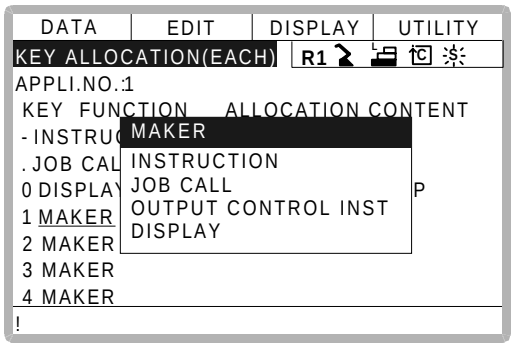

***2** The instruction corresponding to the I/O control allocated by key allocation (SIM) is displayed in the “ALLOCATION CONTENT”.

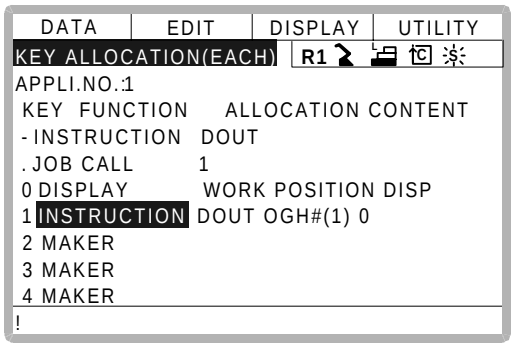

The allocated instruction changes automatically when “ALLOCATION CONTENT” is changed by key allocation (SIM).
Even if the I/O control allocation is changed to the default setting allocated by the manufacturer, the settings for key allocation (EACH) remain the same.

3.14.5 Execution of Allocation

■ Executing the Instruction/Output Control Allocation

Operation

Press the key allocated for instruction allocation or output control allocation*1 ➡ Press [INSERT] and [ENTER]*2

Explanation

***1** The allocated instruction is displayed in the input buffer line.

```
=> WAIT IN#(1) =ON
```

***2** The instruction displayed in the input buffer line is registered.

■ Executing the Job Call Allocation

Operation

Press the key allocated for the job call allocation*1 ➡ Press [INSERT] and [ENTER]*2

Explanation

***1** The CALL instruction is displayed in the input buffer line.

```
=> CALL JOB: ARCON
```

***2** The CALL instruction displayed in the input buffer line is registered.

■ Executing the Display Allocation

Operation

Press the key allocated for the display allocation*1

Explanation

***1** The allocated display is shown. At the same time, the reserved display key lights up. Press the allocated key again to turn off the reserved display key and return to the previous display.

■ Executing the I/O Control Allocation

Operation

Press [INTERLOCK] and the key allocated for I/O control allocation at the same time*1

Explanation

***1** Allocated functions are executed.

3.15 Changing the Output Status

The status of external output signals can be changed from the programming pendant by using either of the following two methods.

- On the universal output status display (see " 5.2.2 Universal Output ")
- On the relay on display

The method that uses the relay on display, which is described here, simplifies the operation for changing the status of signals that are used frequently.

> **NOTE** A maximum of 16 output signals can be displayed on the relay on display and they must be set in advance with parameter settings S2C213 to S2C228.

Operation

Select {IN/OUT} under the top menu ➡ Select {RELAY ON}*1 ➡ Select the desired signal for changing*2 ➡ Press [INTER LOCK]+[SELECT] *3

Explanation

1 The relay on display is shown.

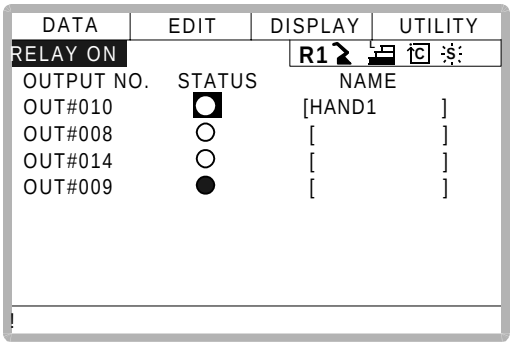

2 Select the status (○ or ●) of the desired signal to change.

***3** The status is changed. (●: status ON, ○: status OFF)

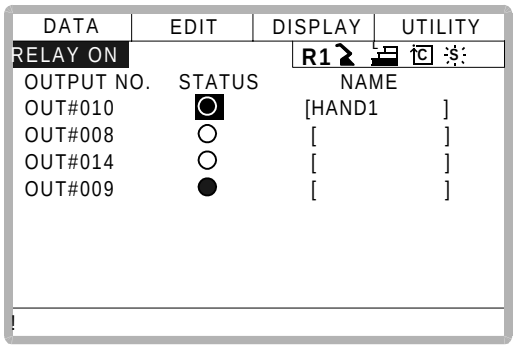

SUPPLE-MENT

It is also possible to turn the relevant external output signal on only for the duration that [INTER LOCK]+[SELECT] are pressed. This selection is made in advance by setting the parameters S2C229 ~ 244 to “1”.

3.16 Temporary Release of Soft Limits

The switches that are set to detect the working envelope of the manipulator are called limit switches. The operating range is monitored by the software in order to stop motion before these limit switches are reached. These software limits are called "soft limits." The operating range of the manipulator is controlled by the following two soft limits.

- Maximum working range for each axis
- Cubic operation area set parallel to the robot coordinate system

These soft limits are continually monitored by the system. When it is detected that the manipulator (tool center point) has reached a soft limit, the manipulator automatically stops.
When the manipulator is stopped at a soft limit, temporarily release the soft limit by following the procedure below, then move the manipulator away from that which exceeded the soft limit.

Operation

Select {ROBOT} under the top menu ➡ Select {LIMIT RELEASE}*1 ➡ Select “SOFT LIMIT RELEASE”*2

Explanation

1 The limit release display is shown.

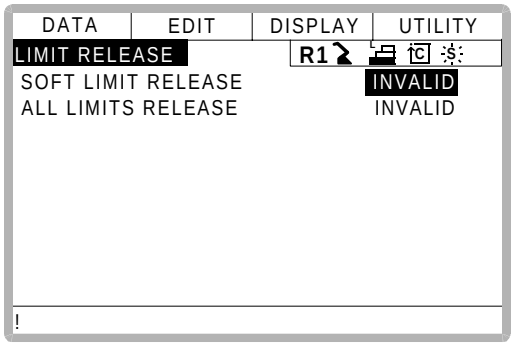

***2** Each time [SELECT] is pressed, “VALID” and “INVALID” alternate. When “SOFT LIMIT RELEASE” is set to “VALID,” the message “Soft limits have been released” is displayed.

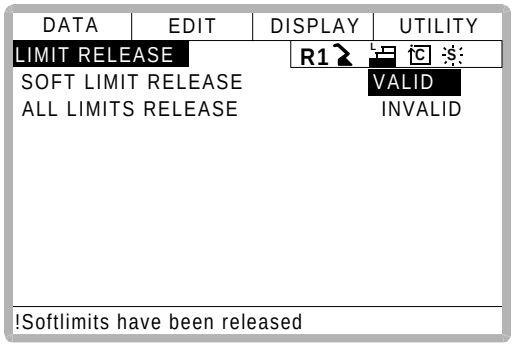

When “SOFT LIMIT RELEASE” is set to “INVALID,” the message “Soft limits have been released" is displayed for three seconds.

NOTE

The teaching data cannot be entered while releasing software limit.

3.17 File Initialize

3.17.1 Initialize Job File

Operation

Turn the power supply ON while pressing [TOP MENU] simultaneously ➡ Change the security mode to management mode ➡ Select {FILE} under the top menu ➡ Select {INITIALIZE}*1 ➡ Select “JOB” *2 ➡ Select “YES” *3

Explanation

1 Initializing objects are shown.

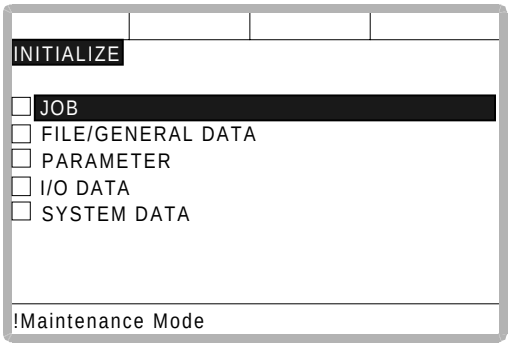

Item marked by ■ can not be selected.

2 The confirmation dialog is displayed.

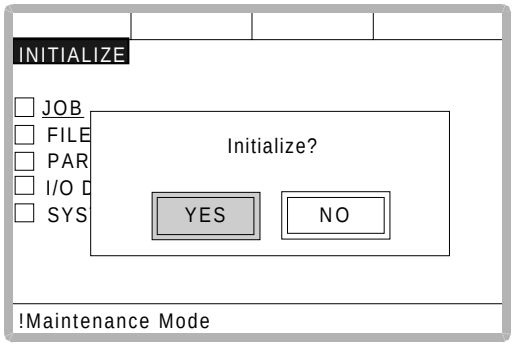

3 Job data is initialized.

3.17.2 Initialize Data File

Operation

Turn the power supply ON while pressing [TOP MENU] simultaneously ➡ Change the security mode to management mode ➡ Select {FILE} under the top menu ➡ Select {INITIALIZE} ➡ Select {FILE/GENERAL DATA} *1 ➡ Select data file for initializing *2 ➡ Press [ENTER]*3 ➡ Select “YES” *4

Explanation

1 Data files are shown.

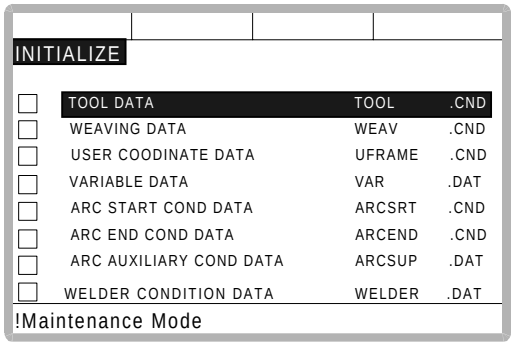

2 The selected data file is marked with “★“.

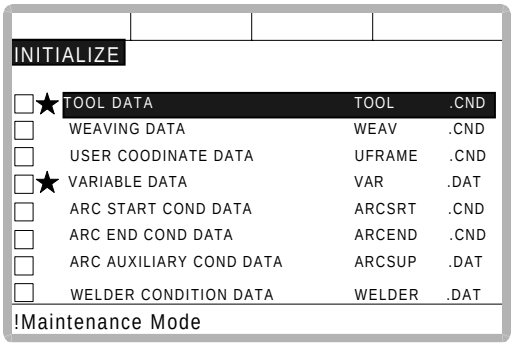

File/Data marked by ■ can not be selected.

3 The confirmation dialog is displayed.

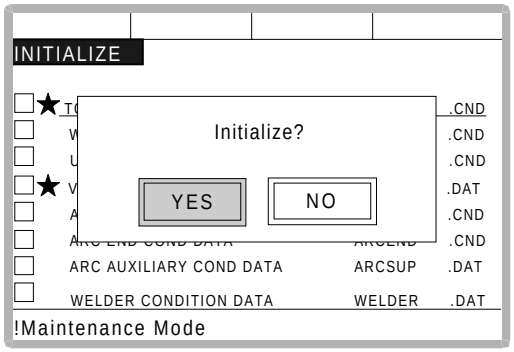

4 Selected data file is initialized.

3.17.3 Initialize Parameter File

Operation

Turn the power supply ON while pressing [TOP MENU] simultaneously ➡ Change the security mode to management mode ➡ Select {FILE} under the top menu ➡ Select {INITIALIZE} ➡ Select {PARAMETER} *1 ➡ Select parameter for initializing *2 ➡ Press [ENTE *3 ➡ Select “YES” *4

Explanation

1 Parameters are shown.

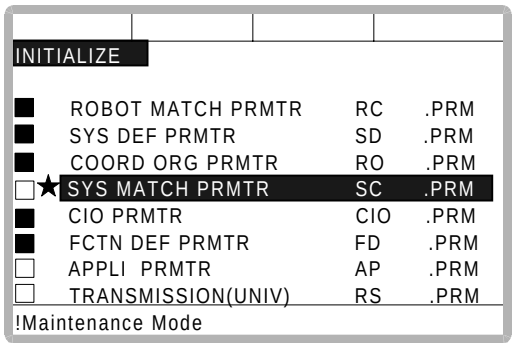

2 The selected parameter is marked with “★“.

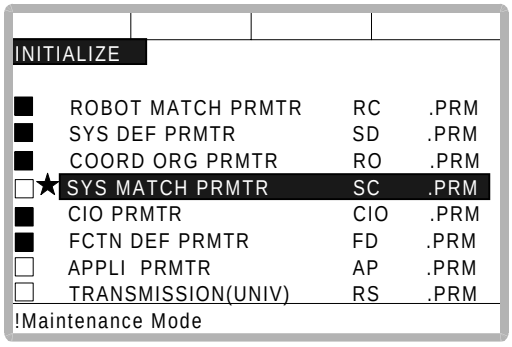

Parameter marked by ■ can not be selected.

3 The confirmation dialog is displayed

.

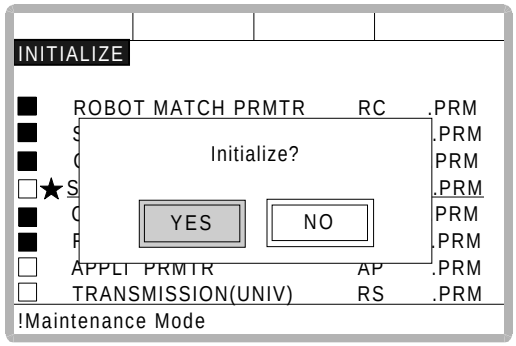

4 Selected parameter is initialized.

3.17.4 Initializing I/O Data

Operation

Turn the power supply ON while pressing [TOP MENU] simultaneously ➡Change the security mode to management mode ➡ Select {FILE} under the top menu ➡Select {INITIALIZE} ➡Select {I/O DATA} *1 ➡Select data for initializing *2 ➡Press [ENTER]*3 ➡Select "YES" *4

Explanation

1 The I/O data is shown.

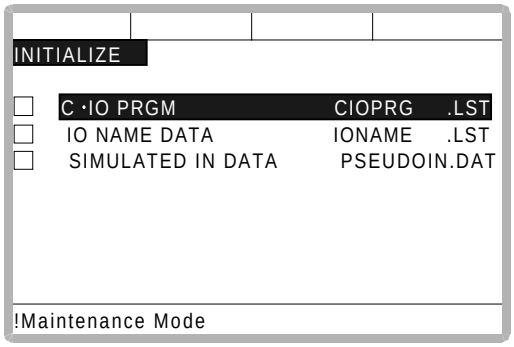

2 The selected data is marked with "★".

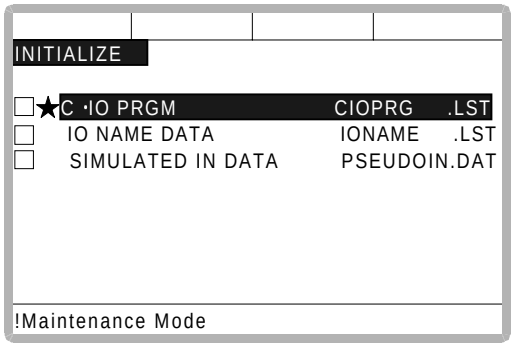

Parameters marked by ■ can not be selected.

3 The confirmation dialog box is displayed.

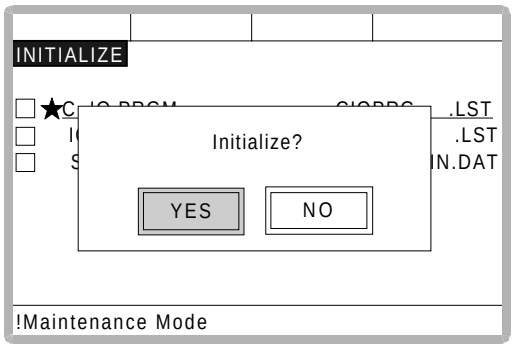

4 The selected data is initialized.

3.17.5 Initializing System Data

Operation

Turn the power supply ON while pressing [TOP MENU] simultaneously ➡ Change the security mode to management mode ➡ Select {FILE} under the top menu ➡ Select {INITIALIZE} ➡ Select {SYSTEM DATA} *1 ➡ Select the parameter to be initialized *2 ➡ Press [ENTER]*3 ➡ Select “YES” *4

Explanation

1 The system data is shown.

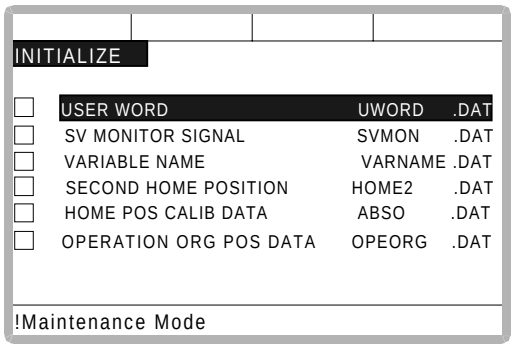

2 The selected data is marked with “★“.

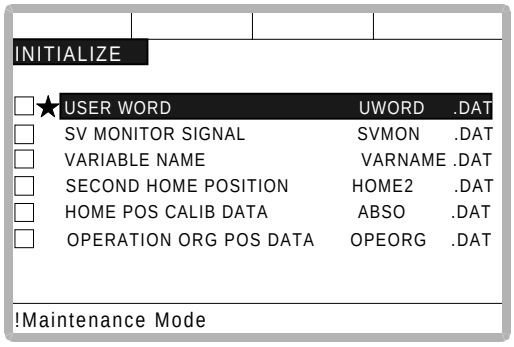

Parameter marked by ■ can not be selected.

3 The confirmation dialog box is displayed.

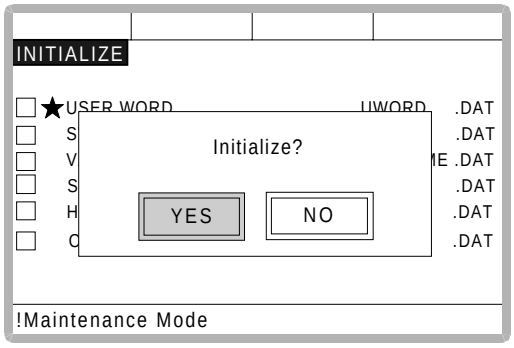

4 The selected data is initialized.

4 Modification of System Configuration

4.1 Addition of I/O Modules

For addition of I/O modules,turn the power supply off.

SUPPLE-MENT

The additional operation must be done in the management mode.
In operation mode or editing mode, only confirmation of status setting is possible.

Operation

Turn the power supply ON while pressing [TOP MENU] simultaneously ➡ Select {SYSTEM} under the top menu*1 ➡ Select {SETUP} *2 ➡ Select {IO MODULE} *3 ➡ Confirm the status of mounted I/O module*4 ➡ Press [ENTER] *5 ➡ Press [ENTER] *6 ➡ Select "YES"*7

Explanation

***1** System display is shown.

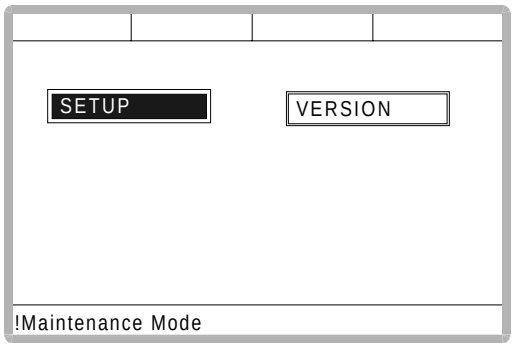

***2** The setup display is shown.

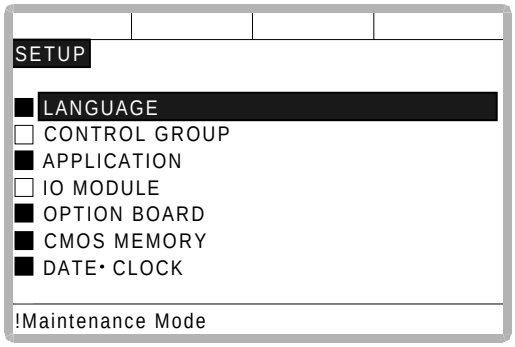

Item marked by ■ can not be set.

***3** The current status of the mounted I/O module is displayed.

```
IO MODULE

ST#01 DI-008 DO-008 AI-002 AO-002
ST#02 DI-016 DO-016
ST#03 NONE
ST#04 NONE
ST#05 NONE
ST#06 NONE
ST#07 NONE
ST#08 NONE
!Maintenance Mode
```

***4** Confirm that each station (ST#) is the correct status.

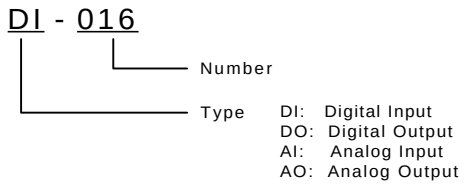

***5** The status of the mounted I/O module for the rest of the stations appears. Confirm them.

NOTE If the slot display is different, check the status again. If the status is correct, the I/O module may be defective. Contact your Yaskawa representative.

```
IO MODULE

ST#08 NONE
ST#09 NONE
ST#10 NONE
ST#11 NONE
ST#12 NONE
ST#13 NONE
ST#14 NONE
ST#15 DI-040 DO-040
!Maintenance Mode
```

***6** The confirmation dialog is shown.

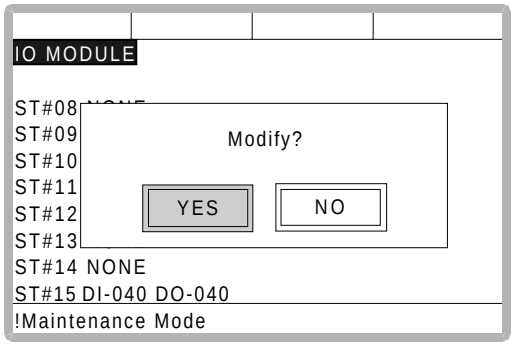

***7** The system parameters are then set automatically according to the current mounted hardware status. The procedure for the addition of the I/O module is complete.

4.2 Addition of Base and Station Axis

For addition of base and station axis, mount all hardware correctly and then execute maintenance mode.

SUPPLE-MENT

The additional operation must be done in the management mode.
In operation mode or editing mode, only confirmation of status setting is possible.

Operation

Turn the power supply ON while pressing [TOP MENU] simultaneously ➡Select {SYSTEM} under the top menu*1 ➡Select {SETUP} *2 ➡Select {CONTROL GROUP} *3 (Display moves to the control group display.)

Explanation

***1** The system display is shown.

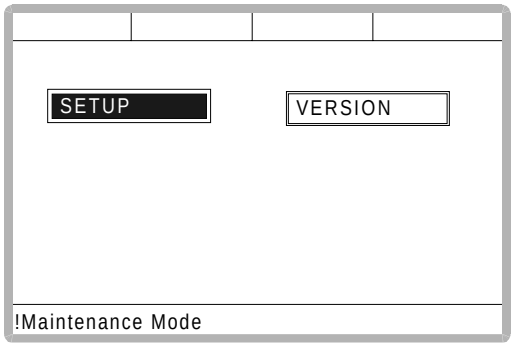

***2** The setup display is shown.

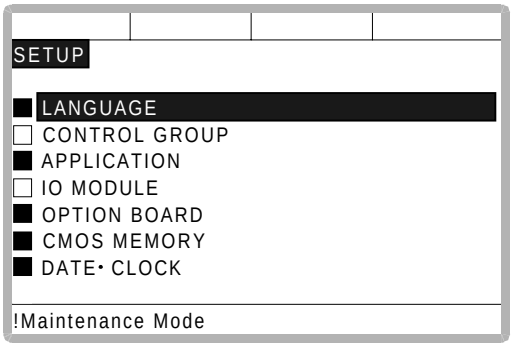

Item marked by ■ can not be set.

***3** The display moves to the control group display shown in the followings pages.

The following items must be set for base and station axes.

-TYPE

Select one in the type list.

In case of base axis (B1,B2,B3)

Select one of RECT-X, -Y, -Z, -XY, -XZ, -YZ or -XYZ.

In case of station axis (S1,S2,S3,S4,S5,S6)

Select one of TURN-1, -2.

In case of other type, select one of UNIV-1, -2, -3, -4, -5, -6

-CONNECTION

In the connection display, specify the SERVOPACK which is connected with each axis group and the contactor which is used for the SERVOPACK.

-AXIS TYPE

Select one in the axis type list.

In case of TURN-* type

No need to select (The axis type is set as TURN type.)

In case of RECT-* type

Select BALL-SCREW type or RACK & PINION type.

In case of UNIV-* type

Select BALL-SCREW type, RACK & PINION type or TURN type.

-MECHANICAL SPECIFICATION

If axis type is ball-screw type, set the following items.

MOTION RANGE (+) [mm]
MOTION RANGE (-) [mm]
REDUCTION RATIO (numerator)
REDUCTION RATIO (denominator)
BALL-SCREW PITCH [mm/r]

If axis type is rack & pinion type, set the following items.

MOTION RANGE (+) [mm]
MOTION RANGE (-) [mm]
REDUCTION RATIO (numerator)
REDUCTION RATIO (denominator)
PINION DIAMETER [mm]

If axis type is turn type, set the following items.

MOTION RANGE (+) [deg]
MOTION RANGE (-) [deg]
REDUCTION RATIO (numerator)
REDUCTION RATIO (denominator)
OFFSET (1st and 2nd axis) [mm]

-MOTOR SPECIFICATION
Set the following items.

MOTOR
SERVO AMP
CONVERTER
ROTATION DIRECTION [NORMAL/REVERSE]
MAX. RPM [rpm]
ACCELERATION SPEED [sec]
INERTIA RATIO
* Select MOTOR, AMPLIFIER and CONVERTER from each type's list.

4.2.1 Base Axis Setting

First, select control group type

Operation

Confirm the type of control group in control group display*1 ➡Select type of control group for changing*2 ➡Select one in the machine list *3 ➡Press [ENTER] in control group display

Explanation

1 The control group display is shown.

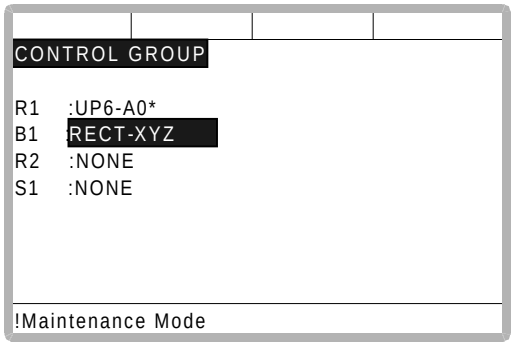

***2** Machine type selection display is shown.

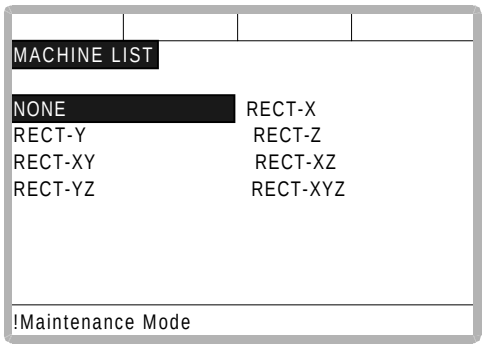

RECT-X :TRAVEL X-AXIS BASE
RECT-Y :TRAVEL Y-AXIS BASE
RECT-Z :TRAVEL Z-AXIS BASE
RECT-XY :TRAVEL XY-AXIS BASE
RECT-XZ :TRAVEL XZ-AXIS BASE
RECT-YZ :TRAVEL YZ-AXIS BASE
RECT-XYZ:TRAVEL XYZ-AXIS BASE
(See following pages)

***3** After the type selection, the display returns to control group display.

***4** The display moves to the connection display.

Direction of Base Axis

RECT-X

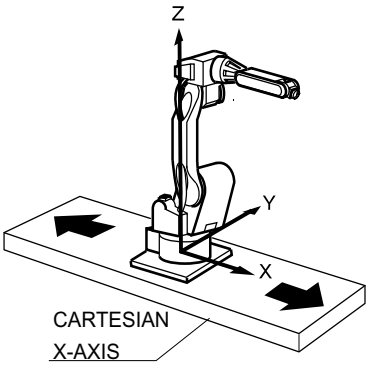

Base axis advancing direction coincides with robot coordinate X-Axis.

RECT-Y

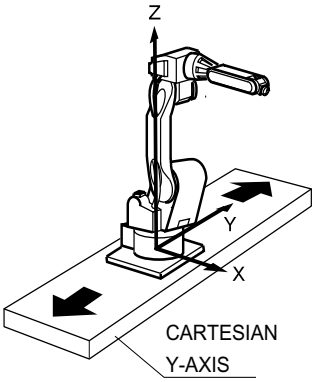

Base axis advancing direction coincides with robot coordinate Y-Axis.

RECT-Z

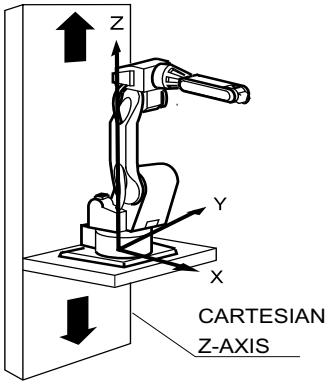

Base axis advancing direction coincides with robot coordinate Z-Axis.

RECT-XY

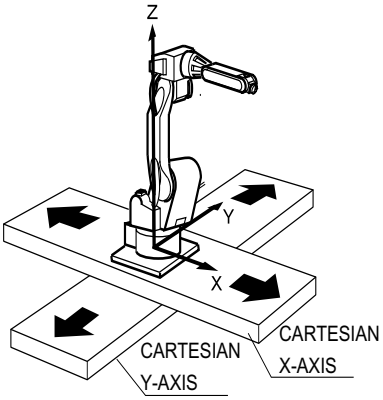

Base 1st and 2nd axes advancing directions coincide with robot coordinate X-Axis and Y-Axis, respecitively.

RECT-YZ

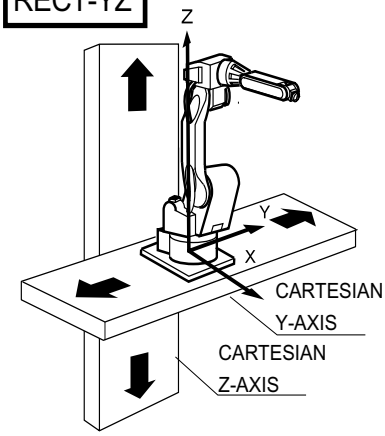

Base 1st and 2nd axes advancing directions coincide with robot coordinate Y-Axis and Z-Axis, respectively.

RECT-XZ

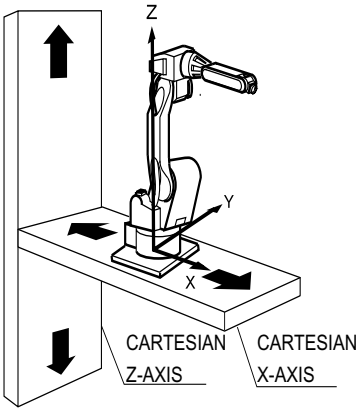

Base 1st and 2nd axes advancing directions coincide with robot coordinate X-Axis and Z-Axis,respectively.

Direction of Base Axis

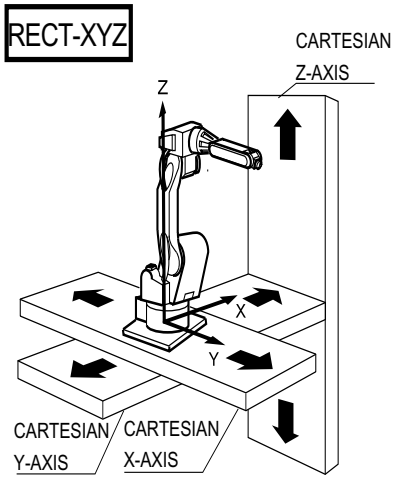

Base 1st, 2nd, and 3rd axes advancing directions coincide with robot coordinate X-Axis, Y-Axis, and Z-Axis, respectively.

In the connection display, the SERVOPACK which is connected with each control group, and the contactor which is used for the SERVOPACK, are specified.

Operation

Confirm type of each control group in the connection display*1 ➡Select connection item of desired control group*2 ➡Select desired item ➡Press [ENTER] in the connection display*3

Explanation

***1** The connection status of each control group is shown.

```
CONNECTION
     SV    CONTACT     CN< 1 2 3 4 5 6 7 8 9 >
R1  :#1      1            [ 1 2 3 4 5 6 - - - ]
B1  :#1      2            [ - - - - - - 1 2 3 ]

!Maintenance Mode
```

Control group which is set as "NONE" in the control group display is not shown.

***2** The items which can be set are shown.
When the item is selected the display returns to the connection display.

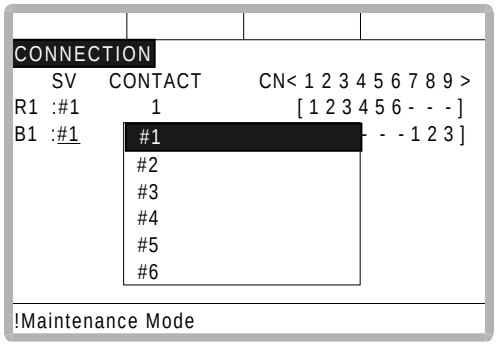

It is possible to change freely the connection between each axis of each control group and each connector (CN) of a SERVOPACK. The number in [ ] means axis number, and it indicates the connector number to which each axis connects.
The example above meaning is as follows,
R1(Robot)
1st axis → 1CN (SERVOPACK #1, 1st contactor is used)
2nd axis → 2CN (SERVOPACK #1, 1st contactor is used)
3rd axis → 3CN (SERVOPACK #1, 1st contactor is used)
4th axis → 4CN (SERVOPACK #1, 1st contactor is used)
5th axis → 5CN (SERVOPACK #1, 1st contactor is used)
6th axis → 6CN (SERVOPACK #1, 1st contactor is used)

B1(Base)
1st axis → 7CN (SERVOPACK #1, 2nd contactor is used)
2nd axis → 8CN (SERVOPACK #1, 2nd contactor is used)
3rd axis → 9CN (SERVOPACK #1, 2nd contactor is used)

***3** The setting in the connection display is completed and the display moves to the axes form display.

In the axes configuration display, the axis type and motor type are specified.

Operation

Confirm axis type of each axis in the axes configuration display*1 ➡Select desired axis*2 ➡Select desired axis type ➡Press [ENTER] in the axes configuration display *3

Explanation

1 The axis type of each axis is shown.

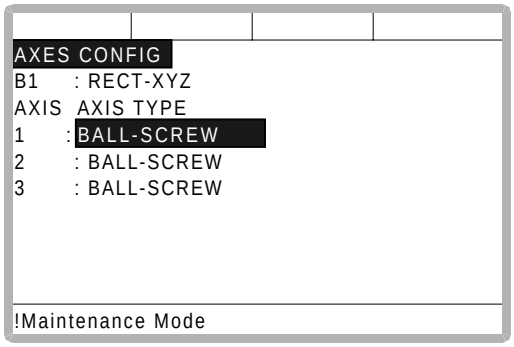

2 The axis type which can be set is shown.

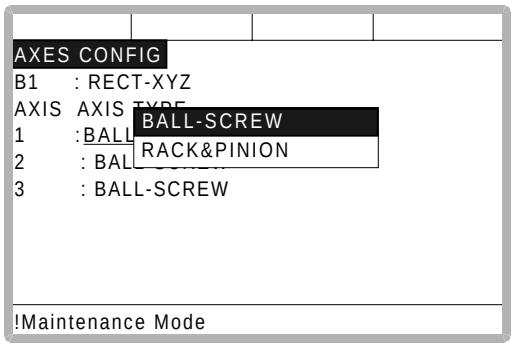

The traveling axis of ball-screw type should be selected as “BALL-SCREW,” the one of rack & pinion type should be selected as “RACK & PINION.” Then the display returns to the axes configuration display.

3 The setting in the axes configuration display is completed and the display moves to the mechanical specification display.

In the mechanical specification display, mechanical data are specified.

Operation

Confirm specification of each axis in the mechanical specification display*1 ➡Select desired item ➡Input the value ➡Press [ENTER] *2

Explanation

1 The mechanical specification is shown.

The mechanical specification display (In case of BALL-SCREW type)

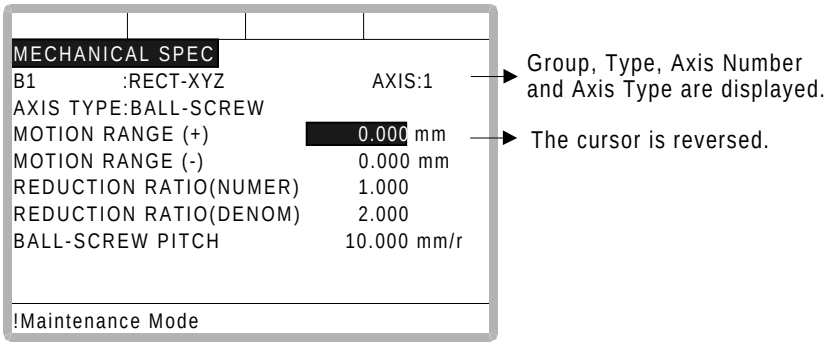

MOTION RANGE :Input maximum moving position (+ direction and - direction) from origin point. (Unit: mm)
REDUCTION RATIO :Input the numerator and the denominator.
<e.g.> If the reduction ratio is 1/2, the numerator should be set as 1.0 and the denominator should be set as 2.0.
BALL-SCREW PITCH :Input the traveling length when the ball-screw rotates once. (Unit: mm/r)

The mechanical specification display (In case of RACK & PINION type)

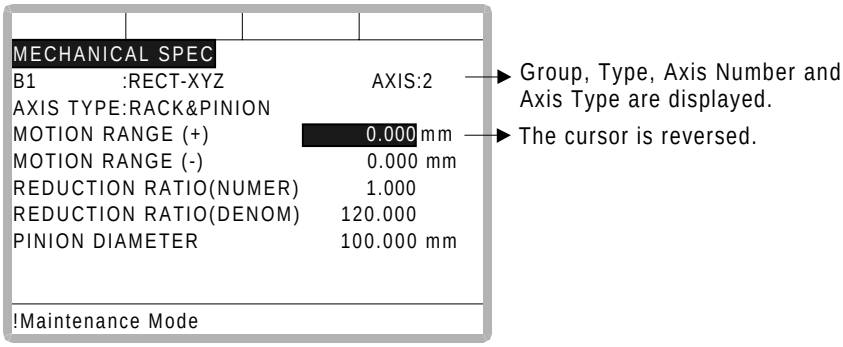

MOTION RANGE :Input maximum moving position (+ direction and - direction) from origin point. (Unit: mm)
REDUCTION RATIO :Input the numerator and the denominator.
<e.g.> If the reduction ratio is 1/120, the numerator should be set as 1.0 and the denominator should be set as 120.0.
PINION DIAMETER :Input the diameter of a pinion. (Unit: mm)

***2** After this setting, the display moves to the next axis. Set them for all axes.
When [ENTER] is pressed in the mechanical specification display for last axis the setting in the mechanical specification display is completed and the display moves to the motor specification display.

In the motor specification display, motor data are specified.

Operation

Confirm specification of each axis in the motor specification display*1 ➡ Select desired item*2 ➡ Input the value and press [ENTER] (Or move cursor to alternative and press [ENTER].)*3

Explanation

***1** The motor specification of each axis is shown.

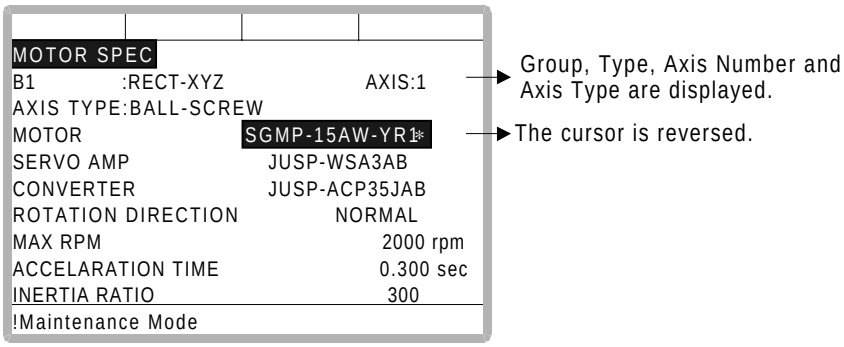

***2** When an item which is input by number is selected the number input buffer line is displayed.
When MOTOR (or SERVO AMP or CONVERTER) is selected, the list of MOTO (SERVO AMP,or CONVERTER) is shown.

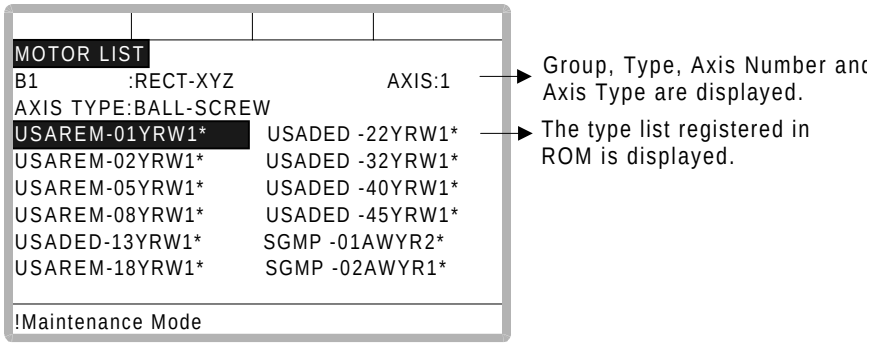

ROTATION DIRECTION: Set the rotation direction to which the current pulse data is increased. (The counterclockwise view from the loaded side is positioned normal.)

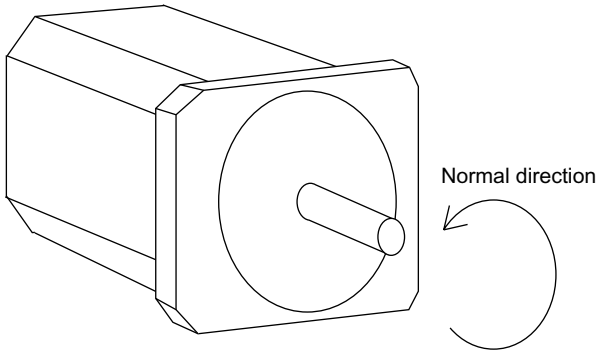

AC Servo Motor

MAX. RPM : Input maximum rotation speed of a motor. (Unit: mm)
ACCELARATION SPEED: Input time between 0.01 and 1.00 to reach maximum speed from stopping status at 100% JOINT motion. (Unit: sec)
INERTIA RATIO : “300” when in case of traveling axis or ” 0” when in case of rotation axis is set as initial value.
But if the following phenomenon occurs in motion, deal with the followed procedure.
<Phenomenon1> During motion, the axis moves unsteady on advance direction.
→ Confirm the motion with increasing this ratio in each 100.
<Phenomenon2> during pause, the motor makes a lot of noise.
→ Confirm the motion with decreasing this ratio in each 100.

***3** After this motor specification setting, the display moves to the next axis. Set them for all axes.
When [ENTER] is pressed at the motor specification display for last axis, the setting in this display is completed and the confirmation dialog is shown.

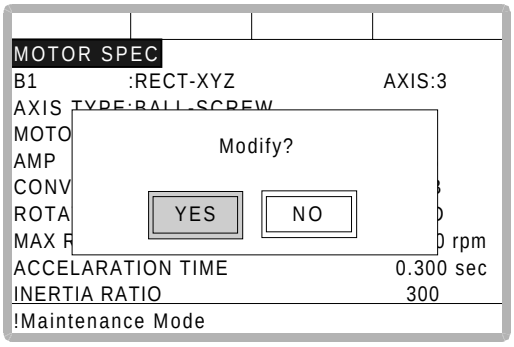

If “YES” is selected, the system parameter is modified automatically.

The addition of the base axis setting is complete.

CAUTION

If the control group construction is changed by addition a base axis or station axis, the internal data of the job file are also changed so that the job file data should be initialized. Initialize the job file data with the procedure “File Initialize” in this manual after changing the construction.

When the data, for example motion range, must be changed after the addition of a base axis or station axis, the change can be done with the same procedure shown above.
In that case, the control group construction is not changed so the job file data should not be initialized.

4.2.2 Station Axis Settin

Operation

Confirm the type of control group in control group display*1 ➡ Select type of control group for changing*2 ➡ Select desired type in the type list *3 ➡ Press [ENTER] in control group display*4

Explanation

*1 The control group display is shown.

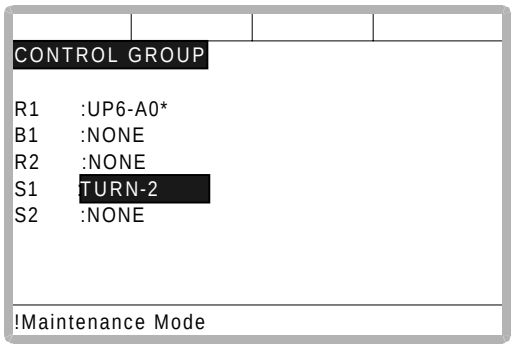

***2** Type selection display is shown.

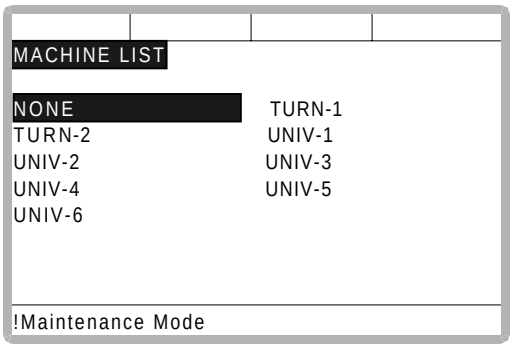

TURN-1:TURN 1 AXIS STATION
TURN-2:TURN 2 AXES STATION
UNIV-1:UNIVERSAL 1 AXIS STATION
UNIV-2:UNIVERSAL 2 AXES STATION
.....

***3** After the type selection, the display returns to control group display.

When the station type is not “TURN-1” and “TURN-2” (like a traveling axis) “UNIVERSAL” should be selected. When “UNIVERSAL” is selected, interpolation motion (linear, circular, etc.) is not supported.

TURN-1

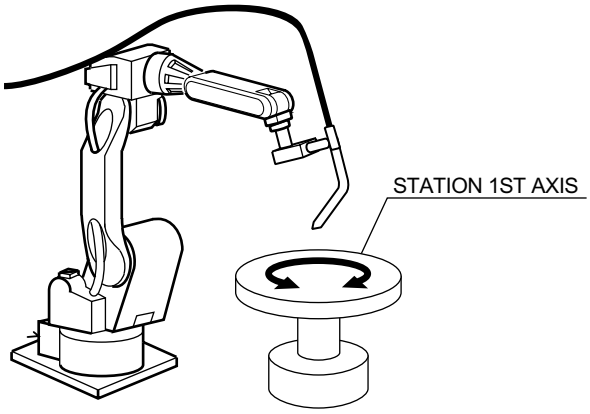

TURN-2

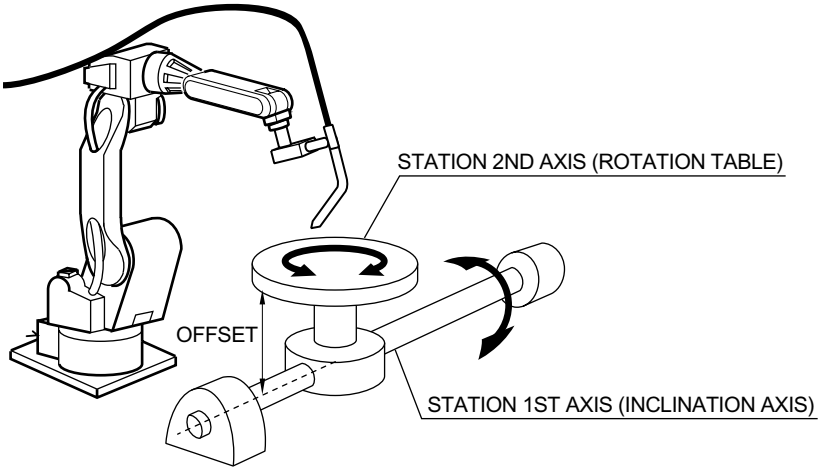

If the number of axes is set beyond 27, error occurs.

***4** The setting in the control group display is completed and the display moves to the connection display.

In the connection display, the SERVOPACK which is connected with each control group and the contactor which is used for the SERVOPACK are specified.

Operation

Confirm type of each control group in the connection display*1 ➡Select connection item of desired control group*2 ➡Select desired item ➡Press [ENTER] in the connection display*3

Explanation

***1** Connection status of each control group is shown.

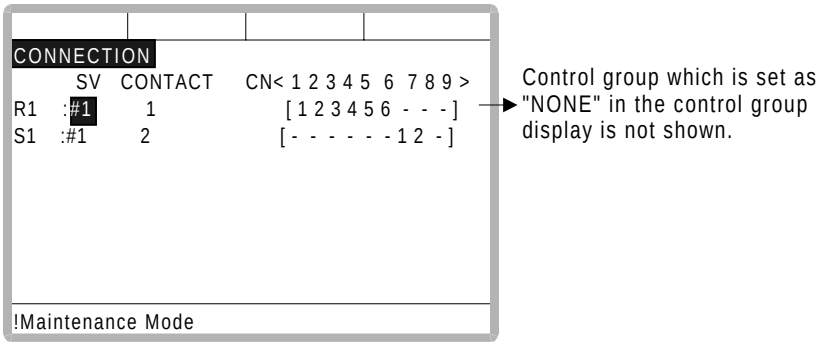

***2** The items which can be set are shown.

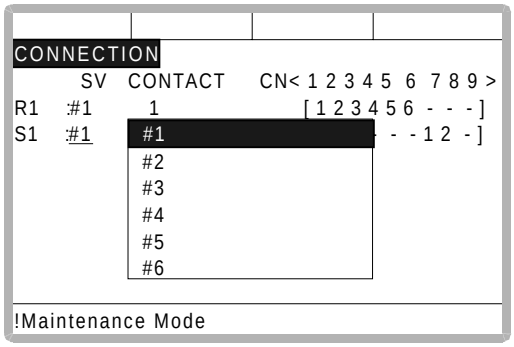

It is possible to freely change the connection between each axis of each control group and each connector (CN) of a SERVOPACK. The number in [ ] is the axis number, and it indicates the connector number to which each axis connects.
The example above means the following:
R1(Robot)
1st axis → 1CN (SERVOPACK #1, 1st contactor is used)
2nd axis → 2CN (SERVOPACK #1, 1st contactor is used)
3rd axis → 3CN (SERVOPACK #1, 1st contactor is used)
4th axis → 4CN (SERVOPACK #1, 1st contactor is used)
5th axis → 5CN (SERVOPACK #1, 1st contactor is used)
6th axis → 6CN (SERVOPACK #1, 1st contactor is used)

S1(Station)
1st axis → 7CN (SERVOPACK #1, 2nd contactor is used)
2nd axis → 8CN (SERVOPACK #1, 2nd contactor is used)
3rd axis → 9CN (SERVOPACK #1, 2nd contactor is used)

The setting in the connection display is completed and the display moves to the axes form display.

In the axes form display, the axis type and motor type are specified.

Operation

Confirm axis type of each axis in the axes form display*1 ➡ Select desired axis *2 ➡ Select desired axis type ➡ Press [ENTER] in the axes form display*3

Explanation

1 The axis type of each axis is shown.

The axes form display (In case of TURN type)

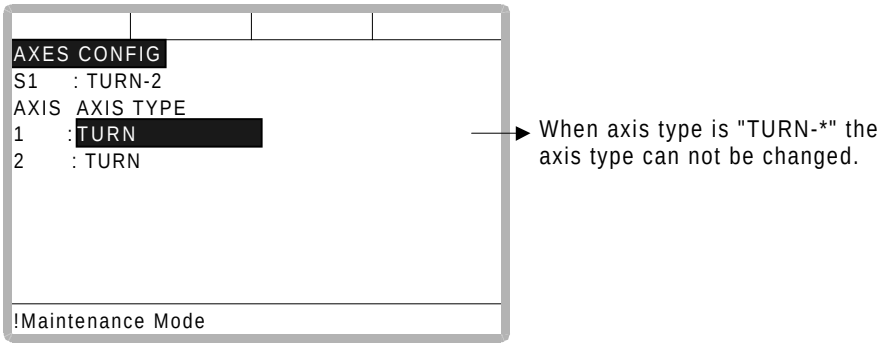

The axes form display (In case of UNIVERSAL type)

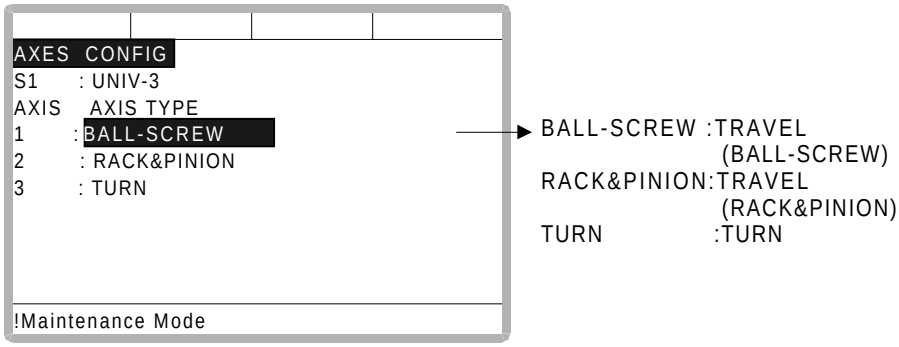

***2** The axis types which can be set are shown.

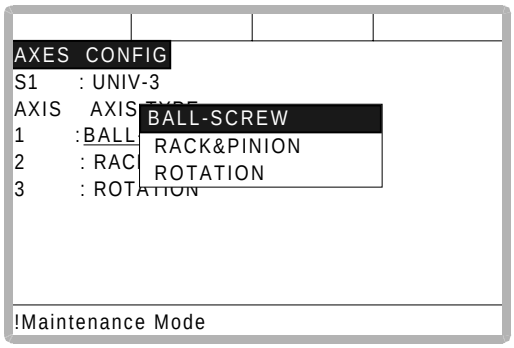

The traveling axis for the ball-screw type should be selected as “BALL-SCREW,” the one for rack & pinion type should be selected as “RACK & PINION.” Then the display returns to the axes form display.

***3** The setting in the axes form display is completed and the display moves to the mechanical specification display.

In the mechanical specification display, mechanical data are specified.

Operation

Confirm specification of each axis in the mechanical specification display*1 ➡Select desired item ➡Input the value ➡Press [ENTER] *2

Explanation

***1** The mechanical specification is shown.

The mechanical specification display (In case of ROTATION type)

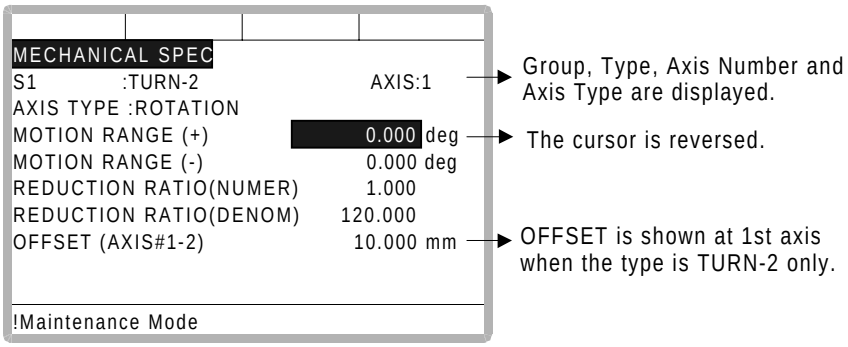

MOTION RANGE :Input maximum moving position (+ direction and - direction) from origin point. (Unit: deg)

REDUCTION RATIO :Input the numerator and the denominator.
<e.g.> If the reduction ratio is 1/120, the numerator should be set as 1.0 and the denominator should be set as 120.0.

OFFSET :Offset should be specified at “TURN-2” type only.
input length between the center of bending axis (1st axis) and the turning table (2nd axis). (Unit: mm)

TURN-2

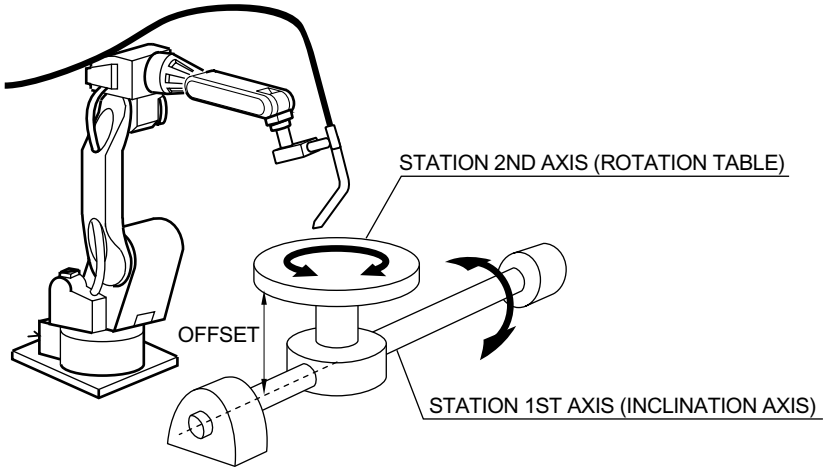

The mechanical specification display (In case of BALL-SCREW type)

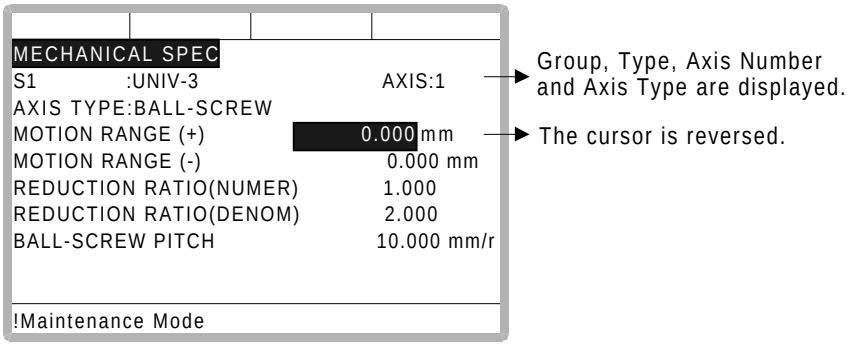

MOTION RANGE :Input maximum moving position (+ direction and - direction) from origin point. (Unit: mm)

REDUCTION RATIO :Input the numerator and the denominator.
<e.g.> If the reduction ratio is 1/2, the numerator should be set as 1.0 and the denominator should be set as 2.0.

BALL-SCREW PITCH :Input the traveling length when the ball-screw rotates once. (Unit: mm/r)

The mechanical specification display (In case of RACK&PINION type)

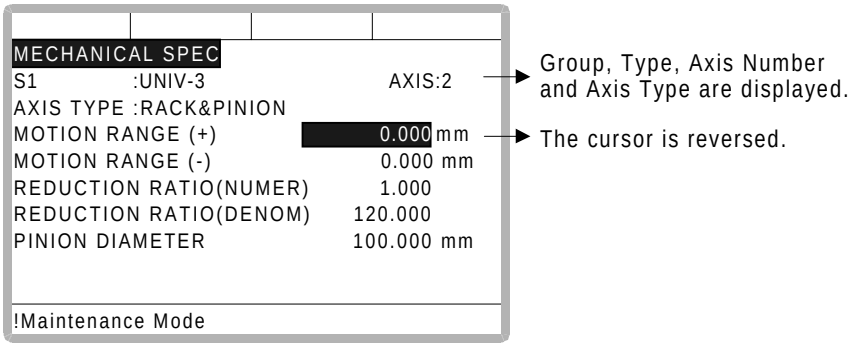

MOTION RANGE :Input maximum moving position (+ direction and - direction) from origin point. (Unit: mm)

REDUCTION RATIO :Input the numerator and the denominator.
<e.g.> If the reduction ratio is 1/120, the numerator should be set as 1.0 and the denominator should be set as 120.0.
PINION DIAMETER :Input the diameter of a pinion. (Unit: mm)

***2** After this setting, the display moves to the next axis. Set them for all axes.
When [ENTER] is pressed in the mechanical specification display for the last axis, the setting in the mechanical specification display is completed and the display moves to the motor specification display.

In the motor specification display, motor data are specified.

Operation

Confirm specification of each axis in the motor specification display*1 ➡ Select desired item*2 ➡ Input the value ➡ Press [ENTER] in the motor specification display *3

Explanation

***1** The motor specification of each axis is shown.

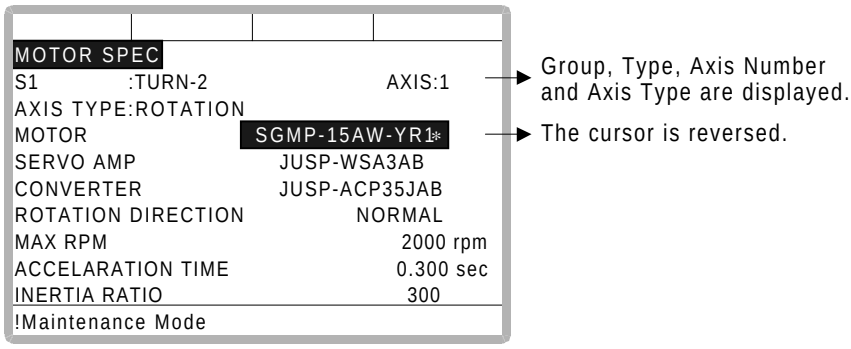

***2** When an item which is input by number is selected, the number input buffer line is displayed.
And when MOTOR (or SERVO AMP or CONVERTER) is selected the list of MOTOR (SERVO AMP or CONVERTER) is shown.

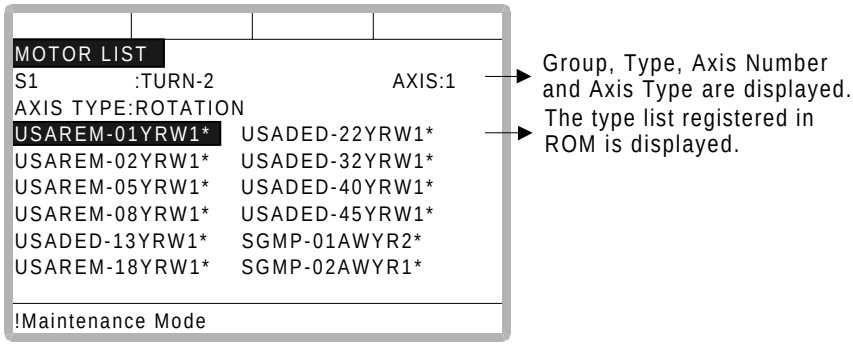

ROTATION DIRECTION : Set the rotation direction to which the current pulse data is increased. (The counterclockwise from view from the loaded side is positioned normal.)

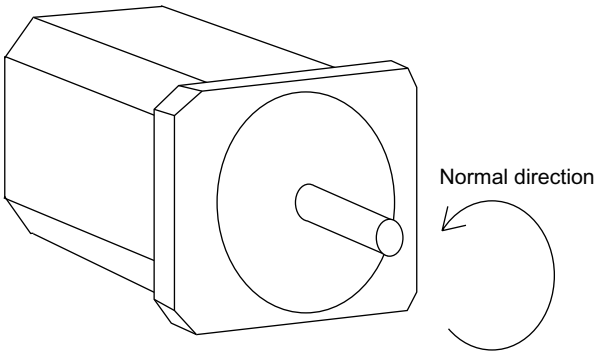

AC Servo Motor

MAX. RPM : Input maximum rotation speed of a motor. (Unit: mm)
ACCELARATION SPEED: Input time between 0.01 and 1.00 to reach maximum speed from stopping status at 100% JOINT motion. (Unit: sec)
INERTIA RATIO : “300” when in case of traveling axis or “0” when in case of rotation axis is set as initial value.
But if the following phenomenon occurs in motion, deal with the followed procedure.
<Phenomenon1> During motion, the axis moves unsteady on advance direction.
→ Confirm the motion with increasing this ratio in each 100.
<Phenomenon2> During pause, the motor makes a lot of noise.
→ Confirm the motion with decreasing this ratio in each 100.

***3** After this motor specification setting, the display moves to the next axis. Set them for all axes.
When [ENTER] is pressed at the motor specification display for the last axis, the setting in this display is completed and the confirmation dialog is shown.

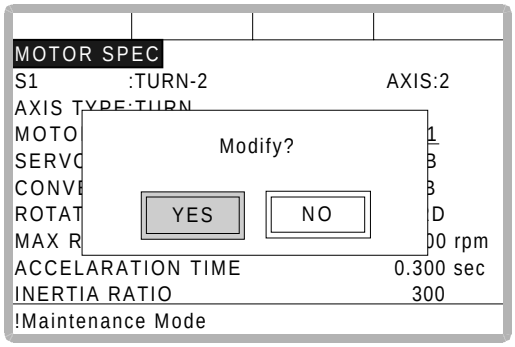

If “YES” is selected, the system parameters are modified automatically.

Then addition of the station axis setting is complete.

CAUTION

If the control group construction is changed by addition of a base axis or station axis, the internal data of the job file are also changed so that the job file data should be initialized. Initialize the job file data with procedure “File Initialize” in this manual after changing the construction.

When the data, motion range for example, should be changed after the addition of a base axis or station axis, the change can be done in the same procedure as shown above.
In that case, the control group construction is not changed so the job file data should not be initialized.

5 System Diagnosis

5.1 System Version

It is possible to check the system CPU version information as follows.

Operation

Select {SYSTEM INFO} under the top menu ➡ Select {VERSION}*1

Explanation

*1 Version number display is shown.

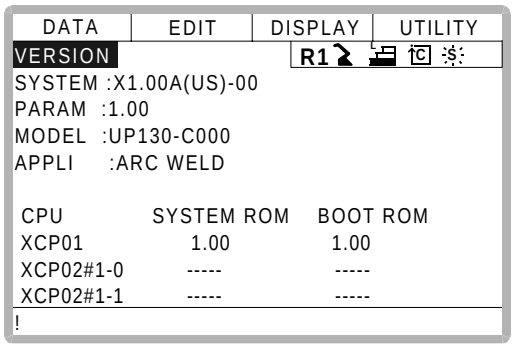

5.2 Input/Output Status

5.2.1 Universal Input

The status of input signal from the external can be confirmed.

■ Universal Input Display

Operation

Select {IN/OUT} under the top menu ➡ Select {UNIVERSAL INPUT}*1

Explanation

***1** Universal input display is shown.

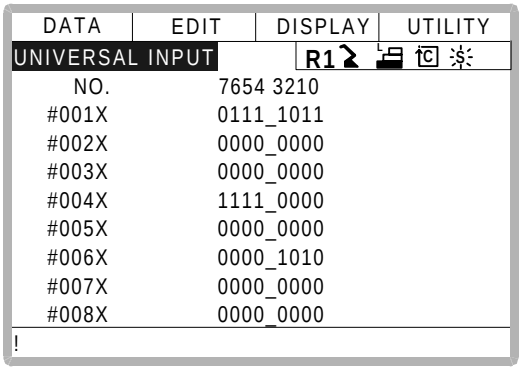

■ Universal Input Detailed Display

Operation

Select {DISPLAY} under the menu ➡ Select {DETAIL}*1

Explanation

***1** Universal input detailed display is shown.

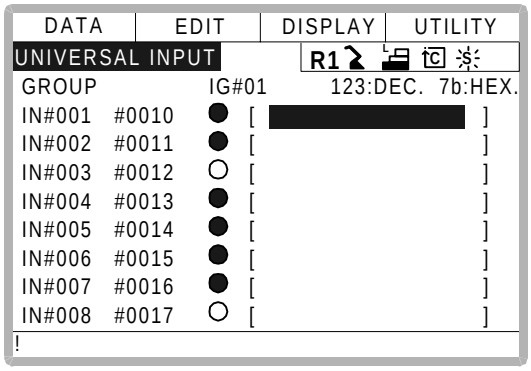

5.2.2 Universal Output

The status of the output signal set by the output instruction can be confirmed and modified.

■ Universal Output Display

Operation

Select {IN/OUT} under the top menu ➡ Select {UNIVERSAL OUTPUT}*1

Explanation

***1** Universal output display is shown.

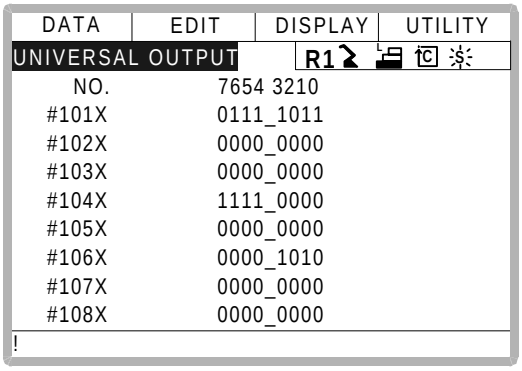

■ Universal Output Detailed Display

Operation

Select {DISPLAY} under the menu ➡ Select {DETAIL}*1

Explanation

***1** Universal output detailed display is shown.

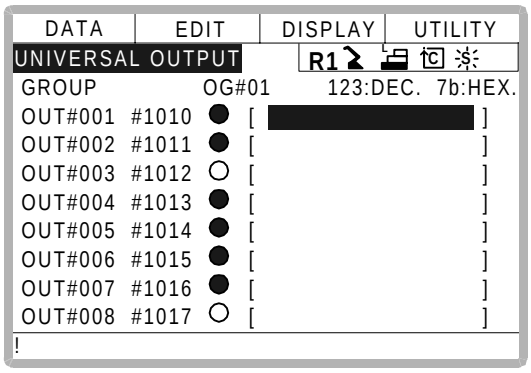

■ Modify the Output Status

Operation

Select the desired output signal number*1 ➡Press [INTER LOCK] + [SELECT] *2

Explanation

***1** Select the status of the desired output signal, "○" or "●," in the universal output detailed display.

***2** The status is changed. (●:ON status, ○:OFF status)

```
DATA | EDIT | DISPLAY | UTILITY
UNIVERSAL OUTPUT          R1
GROUP            OG#01    122:DEC.   7a:HEX.
OUT#001  #1010   ○        [                  ]
OUT#002  #1011   ●        [                  ]
OUT#003  #1012   ○        [                  ]
OUT#004  #1013   ●        [                  ]
OUT#005  #1014   ●        [                  ]
OUT#006  #1015   ●        [                  ]
OUT#007  #1016   ●        [                  ]
OUT#008  #1017   ○        [                  ]
!
```

■ Modify the Signal Name

The name of the universal input or output signal can be modified.
The name can be modified in two ways.

Direct Modify on the Detailed Display

Operation

Select the desired output signal number in the detailed display.*1 ➡Input the signal name*2 ➡Press [ENTER] *3

Explanation

1 Character input line is displayed.

```
DATA | EDIT | DISPLAY | UTILITY
UNIVERSAL INPUT           R1
GROUP            IG#01    123:DEC.   7b:HEX.
IN#001   #0010   ●        [__________________]
IN#002   #0011   ●        [                  ]
IN#003   #0012   ○        [                  ]
IN#004   #0013   ●        [                  ]
IN#005   #0014   ●        [                  ]
IN#006   #0015   ●        [                  ]
IN#007   #0016   ●        [                  ]
>
!
```

2 If the signal name has already been registered, the current name is displayed on the input line.
If you wish to change the name, delete the characters on the input line by pressing [CANCEL], and then input a new name.

```
IN#007   #0016   ○        [                  ]
>TEST SIGNAL
!
```

***3** New signal name is registered.

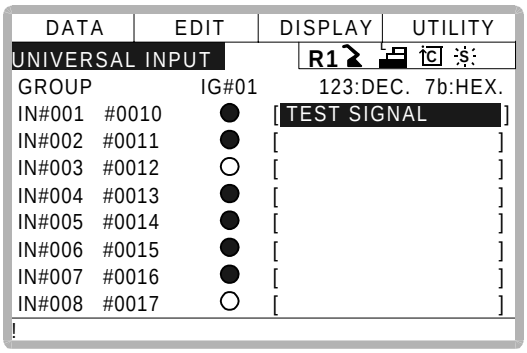

Modify from the Menu

Operation

Select the desired output signal number in the detailed display. ➡ Select {EDIT} under the menu*1 ➡Select {RENAME} *2 ➡Input the signal name ➡Press [ENTER] *3

Explanation

***1** The pull-down menu is shown.

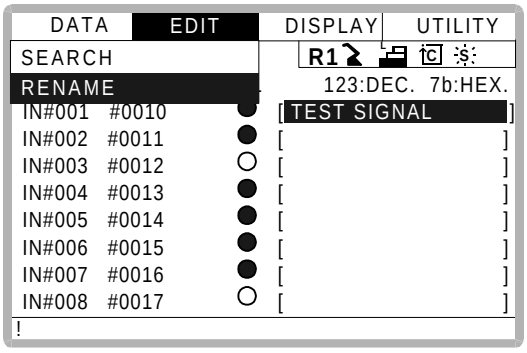

***2** Character input line is displayed.

***3** New signal name is registered.

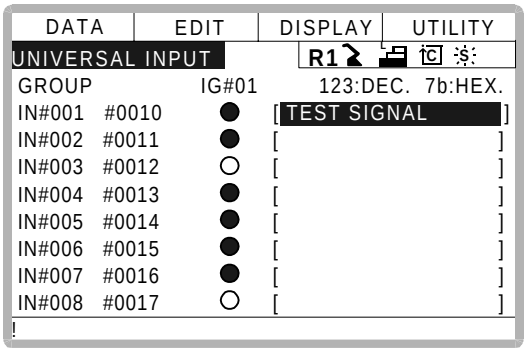

■ Search the Signal Number

The signal number can be searched in the following two ways.

Direct Search on the Detailed Display

Operation

Select the signal number in the detailed display.*1 ➡ Input the signal number *2 ➡ Press [ENTER]*3

Explanation

1 Number input line is displayed.

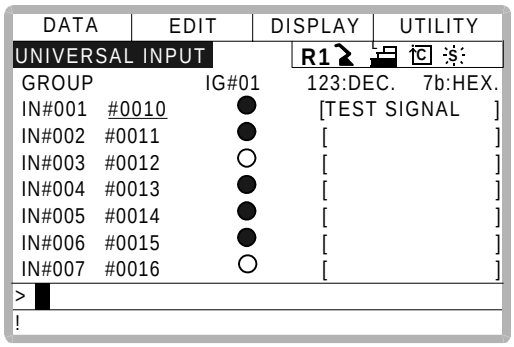

2 Input the signal number in the number input line.

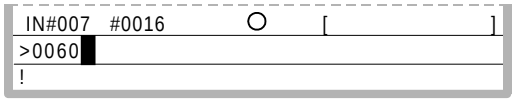

3 The page where the signal number exists is displayed.

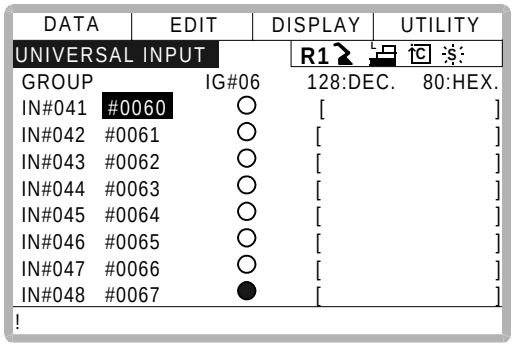

Search from the Menu

Operation

Select the signal number in the detailed display. ➡ Select {EDIT} under the menu*1 ➡ Select {SEARCH}*2 ➡ Input the signal number ➡ Press [ENTER] *3

Explanation

***1** The pull-down menu is shown.

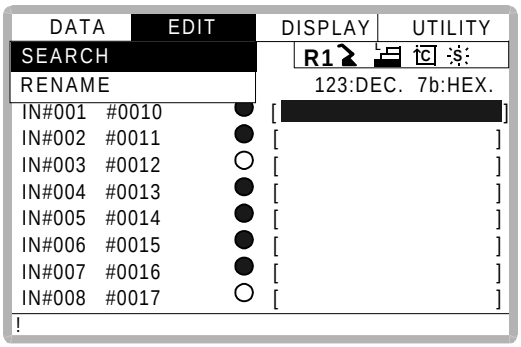

***2** Character input line is displayed.

***3** Input the signal number in the number input line and press [ENTER].The page where the signal number exists is displayed.

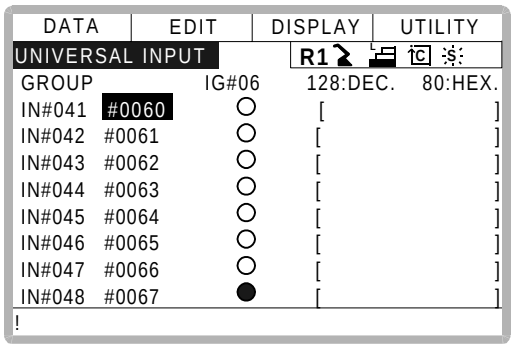

5.2.3 Specific Input

■ Specific Input Display

Operation

Select {IN/OUT} under the top menu ➡ Select {SPECIFIC INPUT}*1

Explanation

*1 Specific input display is shown.

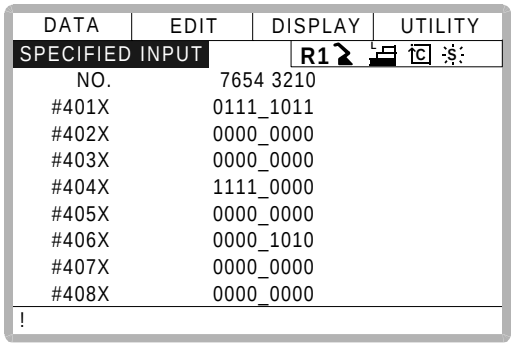

■ Specific Input Detailed Display

Operation

Select {DISPLAY} under the menu ➡ Select {DETAIL}*1

Explanation

*1 Specific input detailed display is shown.

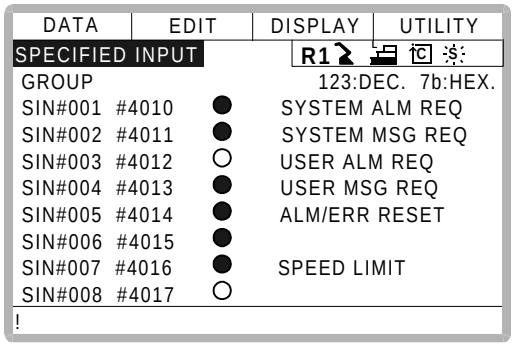

5.2.4 Specific Output

■ Specific Output Display

Operation

Select {IN/OUT} under the top menu ➡ Select {SPECIFIC OUTPUT}*1

Explanation

*1 Specific output display is shown.

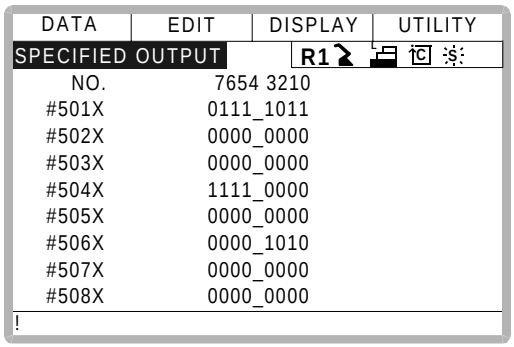

■ Specific Output Detailed Display

Operation

Select {DISPLAY} under the menu ➡ Select {DETAIL}*1

Explanation

*1 Specific output detailed display is shown.

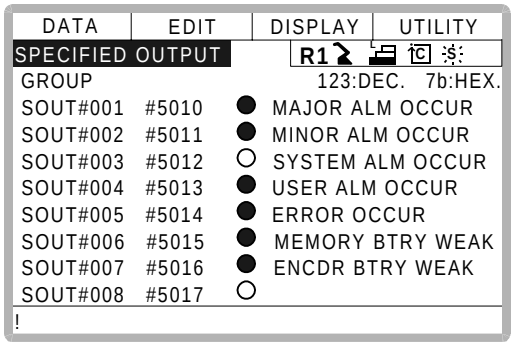

5.2.5 RIN INPUT

■ RIN INPUT Display

Operation

Select {IN/OUT} under the top menu ➡ Select {RIN}*1

Explanation

*1 RIN input display is shown.

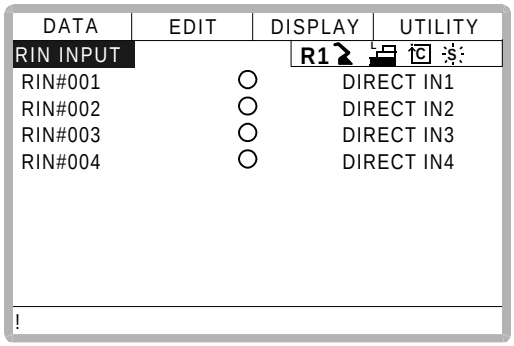

5.3 System Monitoring Time

5.3.1 System Monitoring Time Display

The status of system operation, e.g. power supply time, can be checked.

Operation

Select {SYSTEM INFO} ➡Select {MONITORING TIME} *1

Explanation

*1 The system monitoring time display is shown.

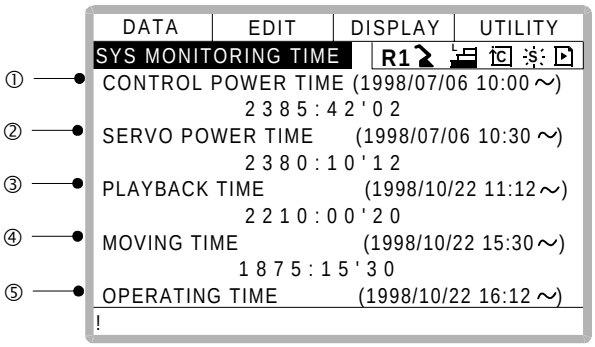

①CONTROL POWER TIME

Displays the cumulative time that the main power supply has been ON.

②SERVO POWER TIME

Displays the cumulative time that the servo power supply has been ON.

③PLAYBACK TIME

Displays the cumulative time during which playback was executed.

④MOVING TIME

Displays the cumulative time that the manipulator was in motion.

⑤OPERATING TIME

Displays the cumulative time spent in operation. For example, if the manipulator is used for arc welding, it displays the amount of time spent in arc welding; if the manipulator is used for handling, it displays the time spent in handling.

5.3.2 Individual Display of the System Monitoring Time

If the p age ressed, servo power time by each robot axis, playback time, moving time and operating time by each application, is individually displayed.

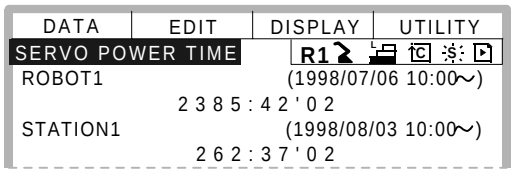

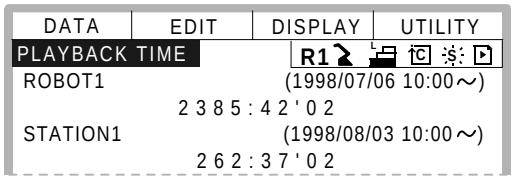

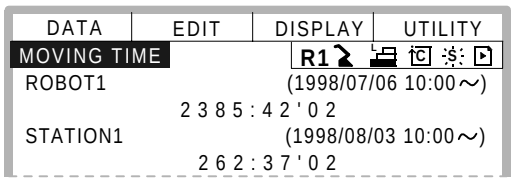

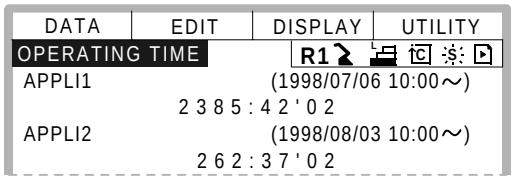

NOTE The total axes times here are not always the same as the time in the system monitoring time display because these displays show time as seen from the individual axes.

5.3.3 Clearing the System Monitoring Time

System monitoring times can be cleared and set back to 0 by following procedure. These operations can be performed in the system monitoring time display, or in the individual displays.

Operation

Select the time to be cleared*1 ➡Select “YE *2

Explanation

1 Confirmation dialog is displayed.

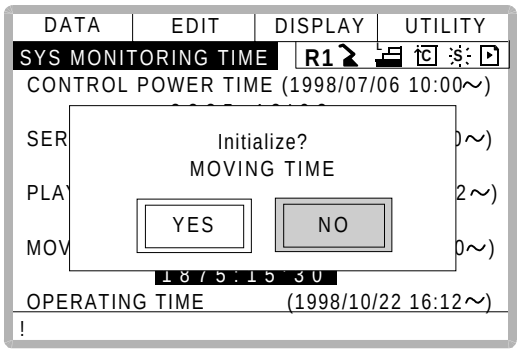

2 The cumulative time value at the cursor line is reset to 0, and a new time measurement begins.

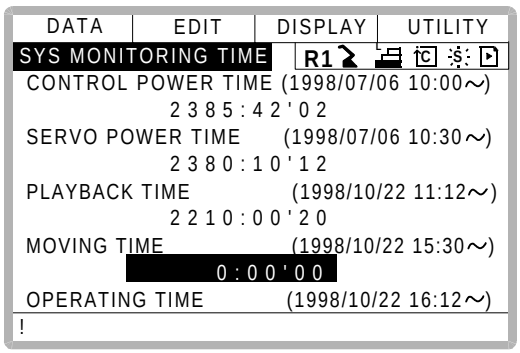

5.4 Alarm History

5.4.1 Alarm History Display

There are five types of alarm list displays: the "MAJOR ALARM DISPLAY," the "MINOR ALARM DISPLAY," the "USER ALARM(SYSTEM) DISPLAY," the "USER ALARM(USER) DISPLAY," and the "OFF-LINE DISPLAY." Each display shows the alarm code and the date and time.

Operation

Select {SYSTEM INFO} under the top menu ➡ Select {ALARM HISTORY}*1 ➡ Press the page key to change the display*2

Explanation

*1 The alarm history display is shown.

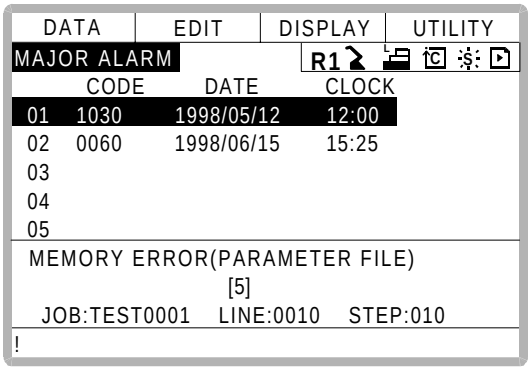

*2 Each time the page key is pressed, the display changes "MAJOR ALARM"→"MINOR ALARM"→"USER ALARM(SYSTEM)"→"USER ALARM(USER)"→"OFF-LINE."

5.4.2 Clearing the Alarm History

The history of the minor alarms and the user alarms (system and user) can be cleared.

Operation

Display the alarm history display to be cleared ➡ Select {DATA} under the menu ➡ Select {CLEAR HISTORY}*1 ➡ Select "YES" *2

Explanation

***1** The confirmation dialog is displayed.

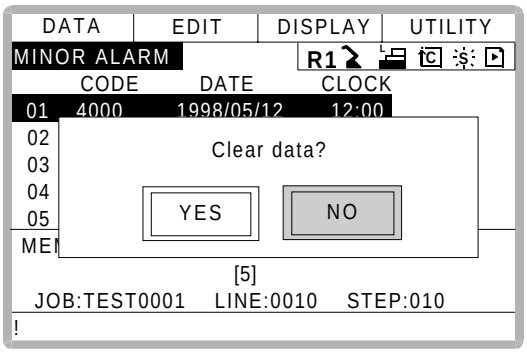

***2** The alarm history displayed is reset.

5.5 I/O Message History

5.5.1 I/O Message History Display

The I/O message history display shows the date and time, job name, line number, and step number of the I/O message that appeared on the screen.

Operation

Select {SYSTEM INFO} under the top menu ➡ Select {I/O MSG HISTORY}*1

Explanation

***1** The I/O message history display is shown.

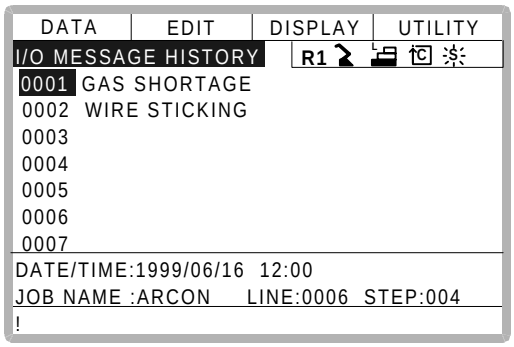

Press [SELECT], and numeric values can now be entered. Input the history number, and press [ENTER]. The search for the input history number begins, and the I/O message that appeared on the screen is displayed.

■ Search

Use the following operation to search for the I/O message history.

Operation

Select {EDIT} under the menu ➡ Select {SEARCH}*1 ➡ Input the history No. ➡ Press [ENTER]*2

Explanation

***1** Character input line is displayed.

***2** The search for the input history number begins, and the I/O message is displayed.

5.5.2 Clearing the I/O Message History

Use the following operation to clear the I/O message history.

Operation

Select {DATA} under the menu ➡ Select {CLEAR HISTORY}*1 ➡ Select "YES" *2

Explanation

***1** The confirmation dialog box is displayed.

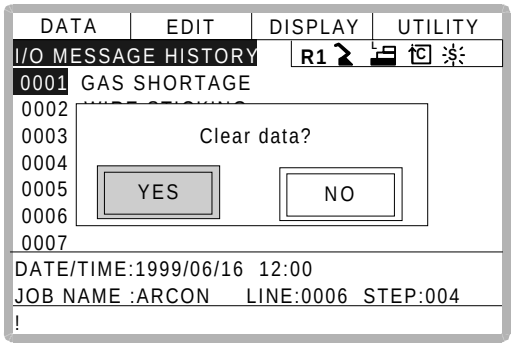

***2** The displayed I/O message history is cleared.

5.6 Position Data When Power is Turned ON/OFF

5.6.1 Power ON/OFF Position Display

The Power ON/OFF position display shows the position of the manipulator when power was turned off the last time, the current position of the manipulator when power was later turned on, and the amount of difference between the two positions. When alarm 4107, "OUT OF RANGE (ABSO DATA)" occurs, the error value of the faulty axes can be verified in this display.

Operation

Select {ROBOT} under the top menu ➡ Select {POWER ON/OFF POS}*1

Explanation

***1** The power ON/OFF position display is shown.

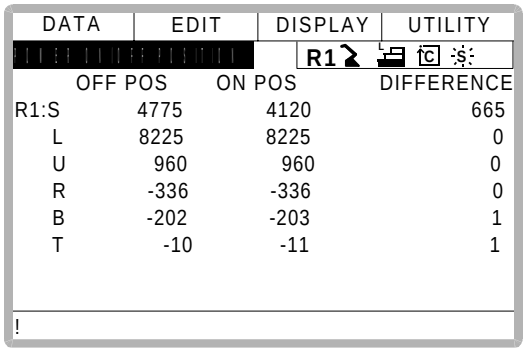

Hardware

6 YASNAC XRC Specification

WARNING

- Before operating the manipulator, check that the SERVO ON lamp goes out when the emergency stop buttons on the playback panel and programming pendant are pressed.

  Injury or damage to machinery may result if the manipulator cannot be stopped in case of an emergency. The emergency stop buttons are attached on upper-right of the playback panel and right of the programming pendant.

- Always set the teach lock before starting teaching.

  Failure to observe this caution may result in injury from inadvertent operation of the playback panel.

- Observe the following precautions when performing teaching operations within the working envelope of the manipulator:
  - Always view the manipulator from the front.
  - Always follow the predetermined operating procedure.
  - Always have an escape plan in mind in case the manipulator comes toward you unexpectedly.
  - Ensure that you have a place to retreat to in case of emergency.

  Improper or unintentional manipulator operation can result in injury.

- Prior to performing the following operations, be sure that there is no one within the working envelope of the manipulator, and be sure that you are in a safe place yourself.
  - Turning the power ON to the YASNAC XRC.
  - Moving the manipulator with the programming pendant.
  - Running check operation.
  - Performing automatic operation.

  Injury may result from collision with the manipulator to anyone entering the working envelope of the manipulator.

CAUTION

- Perform the following inspection procedures prior to performing teaching operations. If problems are found, correct them immediately, and be sure that all other necessary processing has been performed.

  - Check for problems in manipulator movement.
  - Check for damage to the insulation and sheathing of external wires.

- Always return the programming pendant to its specified position after use.

  If the programming pendant is inadvertently left on the manipulator, fixture, or on the floor, the manipulator or a tool could collide with it during manipulator movement, possibly causing injuries or equipment damage.

6.1 Specification List

Controller		
	Configuration	Free-standing, enclosed type
	Dimensions	Refer to following
	Cooling System	Indirect cooling
	Ambient Temperature	0°C to + 45°C (During operation) -10°C to + 60°C (During transit and storage)
	Relative Humidity	90%RH max. (non-condensing)
	Power Supply	3-phase, 200/220 VAC(+10% to -15%) at 50/60Hz(2 Hz)
	Grounding	Grounding resistance: 100 Ω or less Exclusive grounding
	Digital I/O	Specific signal (hardware) 12 inputs and 2 outputs General signals (standard, max.) 40 inputs and 40 outputs
	Positioning System	By serial communication (absolute encoder)
	Drive Unit	SERVOPACK for AC servomotors
	Acceleration/ Deceleration	Software servo control
	Programming Capacity	5000 steps, 7000 instructions (including steps)
Playback Panel*1		
	Dimensions	190(W) × 120(H) × 50(D) mm
	Buttons Provided	Mode change Start / Hold, Emergency stop

***1** An optional remote playback panel is available

Dimensions	UP6, SK16X 470(W) × 760(H) × 320(D) mm
	SK45X 550(W) × 860(H) × 420(D) mm
	UP130 650(W) × 860(H) × 420(D) mm

6.2 Function List

Programming Pendant Operation	Coordinate System	Joint, Rectangular/Cylindrical, Tool, User Coordinates
	Modification of Teaching Points	Adding, Deleting, Correcting (Robot axes and external axes respectively can be corrected.)
	Inching Operation	Possible
	Locus Confirmation	Forward/Reverse step, Continuous feeding
	Speed Adjustment	Fine adjustment possible during operating or pausing
	Timer Setting	Possible every 0.01 s
	Short-cut Function	Direct-open function, Screen reservation function
	Interface	RS-232 ×1 port for FC 1/FC2 (At Programming Pendant)
	Application	Arc welding, Spot welding, Handling, General, Others
Safety Feature	Essential Measures	JIS (Japanese Industrial Standard)
	Running Speed Limit	User definable
	Deadman Switch	3 position type. Servo power can be turned on at the mid position only. (Located on programming pendant)
	Collision proof Frames	S-axis frame (doughnut-sector), Cubic frame (user coordi-nate)
	Self-Diagnosis	Classifies error and two types of alarms (major and minor) and displays the data
	User Alarm Display	Possible to display alarm messages for peripheral device
	Machine Lock	Test-run of peripheral devices without robot motion
	Door Interlock	A door can be opened only when a circuit breaker is off.
Maintenance Function	Operation Time Display	Control power-on time, Servo power-on time, Playback time, Operation time, Work time
	Alarm Display	Alarm message and previous alarm records
	I/O Diagnosis	Simulated enabled/disabled output possible
	T.C.P.Calibration	Automatically calibrates parameters for end effectors using a master jig

Programing Functions	Programming	Interactive programming
	Language	Robot language: INFORM II
	Robot Motion Control	Joint coordinates, Linear/Circular interpolations, Tool coordinates
	Speed Setting	Percentage for joint coordinates, 0.1mm/s units for interpolations, Angular velocity for T.C.P.fixed motion
	Program Control Instructions	Jumps, Calls, Timer, Robot stop, Execution of some instructions during robot motion
	Operation Instructions	Preparing the operation instructions for each application (Arc-ON, Arc-OFF, etc.)
	Variable	Global variable, Local variable
	Variable Type	Byte type, Integer type, Double precision type, Real number type, Position type
	I/O Instructions	Discrete I/O, Pattern I/O processing

6.3 Programming Pendant

Material	Reinforced thermoplastic enclosure with a detachable suspending strap
Dimensions	200(W) × 348(H) × 61.8(D) mm
Displayed Units	40 characters 12 lines
	Multilingual function (English, Japanese, Hankul)
	Backlight
Others	3 position deadman switch, RS-232C × 1 port

6.4 Equipment Configuration

The XRC is comprised of individual units and modules (circuit boards). Malfunctioning components can generally be easily repaired after a failure by replacing a unit or a module.
This section outlines the XRC equipment configuration.

6.4.1 Arrangement of Units and Circuit Boards

■ Configuration

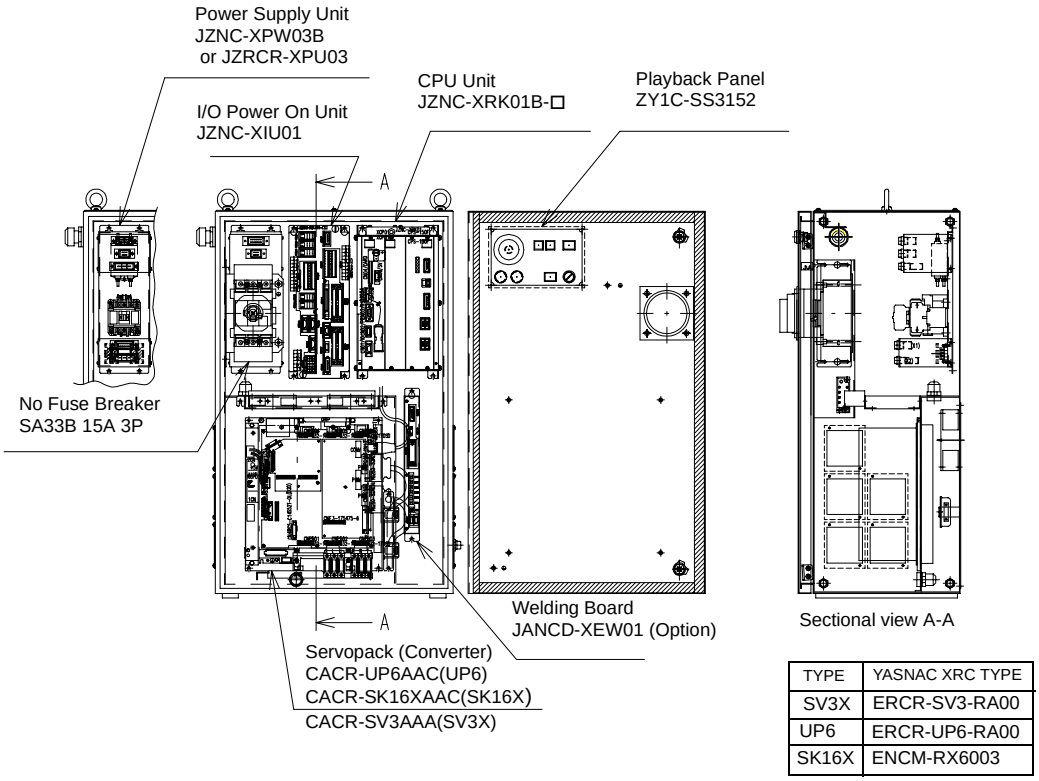

TYPE	YASNAC XRC TYPE
SV3X	ERCR-SV3-RA00
UP6	ERCR-UP6-RA00
SK16X	ENCM-RX6003

SV3X, UP6, SK16X Configuration

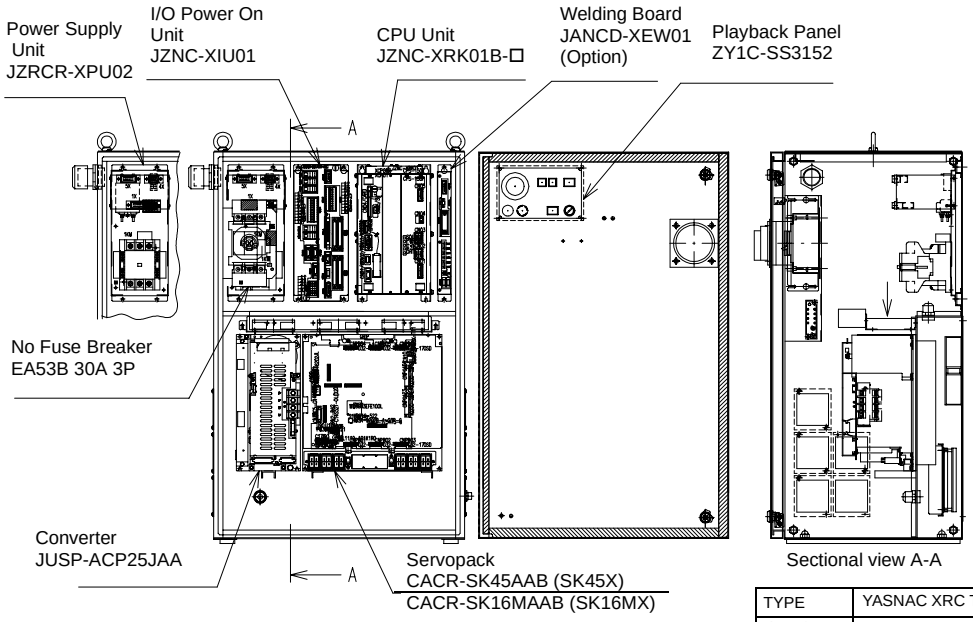

TYPE	YASNAC XRC TYPE
SK16MX	ERCR-SK16M-RA00
SK45X	ERCR-SK45-RA00

SK16MX, SK45X Configuration

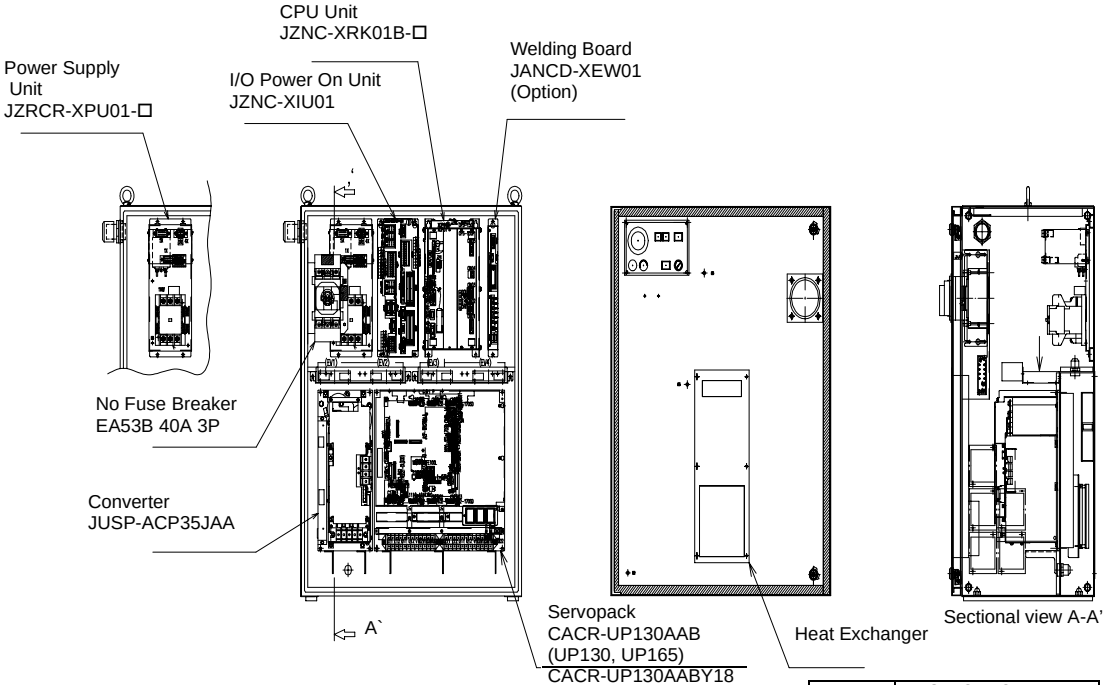

TYPE	YASNAC XRC TYPE
UP130	ERCR-UP130-RA00
UP165	ERCR-UP165-RA00
UP200	ERCR-UP200-RA00
UP130R	ERCR-UP130R-RA00

UP130, UP165, UP200, UP130R Configuration

■ Location

Section	Unit	
Door	Playback panel(ZY1C-SS3125)	
	Heat exchange board (Large type of robot)	
Front section	Servopack (CACR- €□□□□AA□□) (Large robot type uses separated converter type.)	Control circuit board (JASP-WRCA01)
		Control power supply (JUSP-RCP01AAB)
		Converter (JUSP-ACP□□JAA)
		Amplifier (JUSP-WS□□AA)
	I/0, TU unit (JZNC-XIU01)	
	CPU Rack (JZNC-XRK01B-□)	System control circuit board (JANCD-XCP01)
		CPU power supply (CPS-150F)
	Power Supply unit (JZNC-XPW03B, JZRCR-XP □□)	

6.4.2 Cooling System of the Controller Interior

The backside duct fan draws in air from the air intake and expels it from the air outlet to cool the Servopack. The servopack ascending fan circulates the air to keep temperature even throughout the interior of the XRC. The XRC for large robots is equipped with a heat exchanger on the door to cool the interior of the XRC.

.

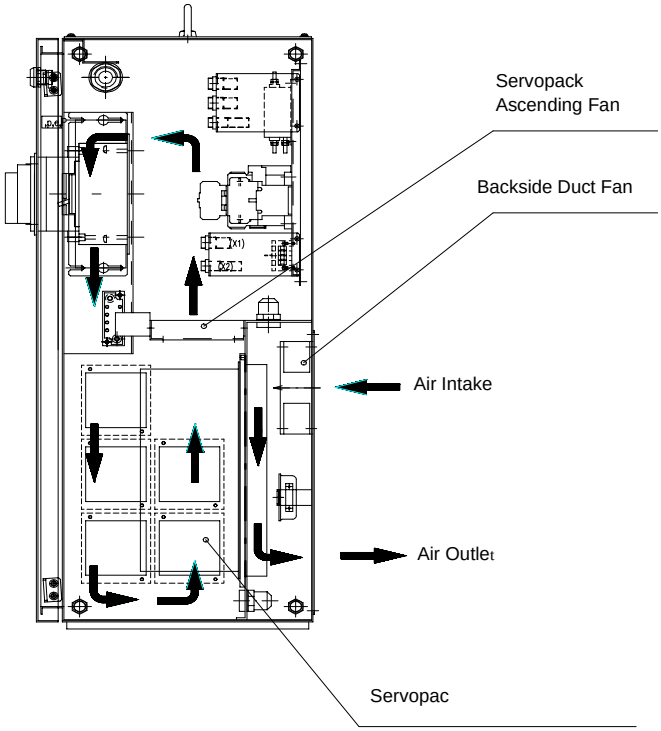

Cooling Configuration (Small type)

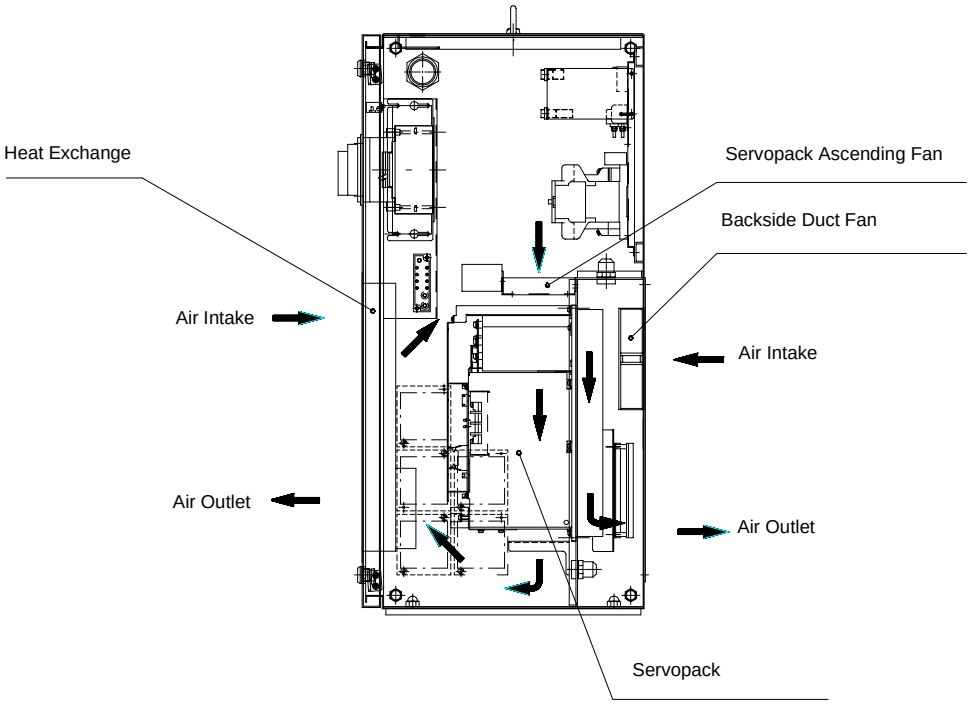

Cooling Configuration (Large type)

7 Description of Units and Circuit Boards

WARNING

- Before operating the manipulator, check that the SERVO ON lamp goes out when the emergency stop buttons on the playback panel and programming pendant are pressed.

  Injury or damage to machinery may result if the manipulator cannot be stopped in case of an emergency.

- Always set the teach lock before starting teaching.

  Failure to observe this caution may result in injury due to inadvertent operation on the playback panel.

- Observe the following precautions when performing teaching operations within the working envelope of the manipulator:

  - Always view the manipulator from the front.
  - Always follow the predetermined operating procedure.
  - Always have an escape plan in mind in case the manipulator comes toward you unexpectedly.
  - Ensure that you have a place to retreat to in case of emergency.

  Improper or unintentional manipulator operation can result in injury.

- When turning the power on to the YASNAC XRC, be sure that there is no one within the working envelope of the manipulator, and be sure that you are in a safe place yourself.

  Injury may result from collision with the manipulator to anyone entering the working envelope of the manipulator. Always press the emergency stop button immediately if there are problems.

CAUTION

- Perform the following inspection procedures prior to performing teaching operations. If problems are found, correct them immediately, and be sure that all other necessary processing has been performed.

  - Check for problems in manipulator movement.
  - Check for damage to insulation and sheathing of external wires.

- Always return the programming pendant to its specified position after use.

  If the programming pendant is inadvertently left on the manipulator or fixture, or on the floor, the manipulator or a tool could collide with it during manipulator movement, possibly causing injuries or equipment damage.

7.1 Power Supply Unit

The power supply unit consists of the contactor (1KM) for servo power and the line filter (1LF). It turns the contactor servo power on and off using the signal for servo power control from the I/O contactor unit, and supplies power(3-phase AC200/220V) to the unit.
The power supply (single phase AC200/220V) is supplied to the control power supply and I/ contactor unit and servopack (servo controlled power supply) via the line filter.

Power Supply Unit Models

Model	Robot Type
JZNC-XPW03B or JZRCR-XPU03	SV3X, UP6, SK16X
JZRCR-XPU02	SK16MX, SK45X
JZRCR-XPU01-□	UP130, UP165, UP200, UP130R

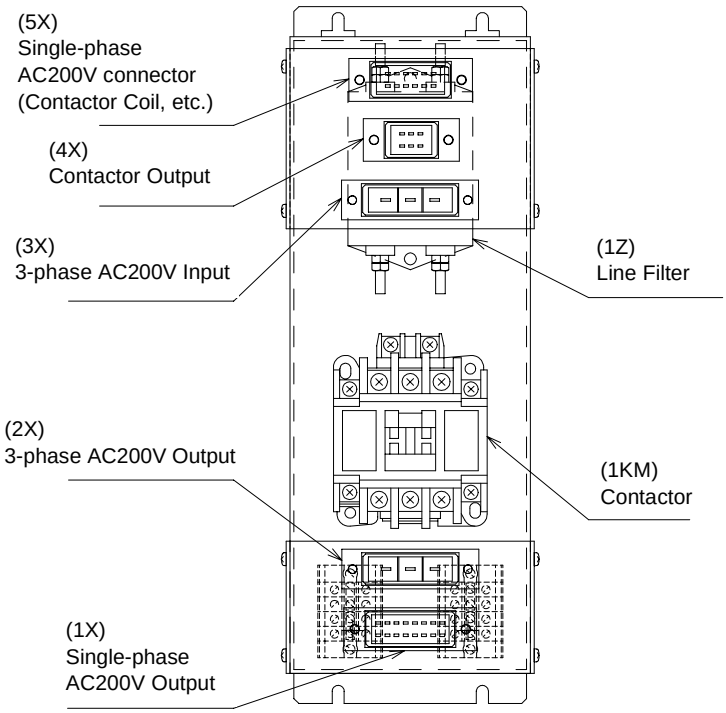

Power Supply Unit Configuration (JZNC-XPW03B, JZRCR-XPU03)

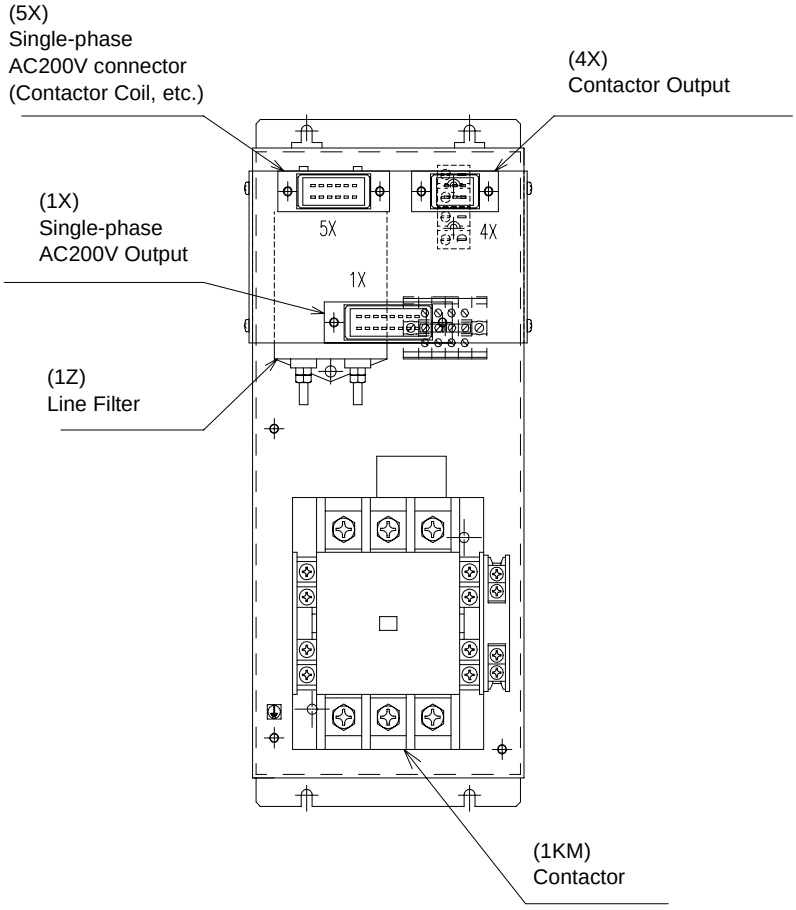

Power Supply Unit Configuration (Large Type)
(JZRCR-XPU01-□, JZRCR-XPU02)

7.2 CPU Rack

7.2.1 CPU Rack Configuration

CPU rack consists of the control power unit, circuit board racks, and system control circuit boards.

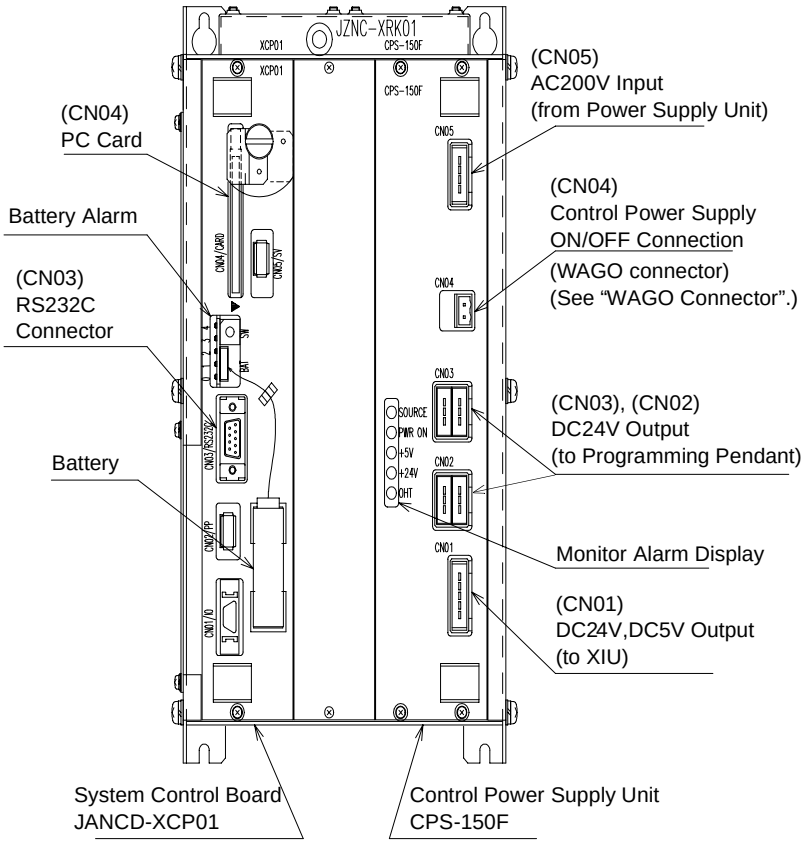

CPU Rack Configuration (JZNC-XRK01B-□)

7.2.2 Circuit Board in the CPU Rack

■ System Control Circuit Board (JANCD-XCP01)

This board performs to control the entire system, display to the programming pendant, control the operating keys, control operation, calculate interpolation, and interface the servo control circuit board (with a serial communication board JANCD-XIF03). This board has the PC card interface and Serial interface for RS-232C. The JANCD-XMM 01 board (option) can be installed when CMOS memory is expanded.

■ Control Power Supply Unit (CPS-150F)

This unit supplies the DC power (DC5V, 24V) to the I/O contactor unit (JZNC-XIU 01) and the programming pendant. It is also equipped with the input function for turning the control power supply on and off.

<table>
<tr><th>Items</th><th>Specifications</th></tr>
<tr><td>Input</td><td>Rated Input Voltage: AC200/220
Voltage Fluctuation Range: +10% to -15% (AC170 to 242V}
Frequency: 50/60Hz ± 2Hz (48 to 62Hz)</td></tr>
<tr><td>Output Voltage</td><td>DC + 5V: 10A
DC +24V: 4.0A</td></tr>
<tr><td>Indicator</td><td>
<table>
<tr><th>DISPLA</th><th>Color</th><th>Status</th></tr>
<tr><td>SOURCE</td><td>Green</td><td>Lights when AC power supply input (Normally ON)</td></tr>
<tr><td>POWER ON</td><td>Green</td><td>Lights when DC power supply input (Normally ON)</td></tr>
<tr><td>+5V</td><td>Red</td><td>Lights when +5V supply overvoltage or overcurrent (ON when abnormal)</td></tr>
<tr><td>+24V</td><td>Red</td><td>Lights when +24V supply overcurrent (ON when abnormal)</td></tr>
<tr><td>OHT</td><td>Red</td><td>Lights when units interior overheats (ON when abnormal)</td></tr>
</table>
</td></tr>
<tr><td>Overheat Detector</td><td>It is detected when the temperature inside of the controller is about 65°C</td></tr>
<tr><td>Control Power ON/OFF</td><td>To turn on the XRC controller power, turn the main switch to the ON position then turning on the control power supply. If the controller is not located at the workplace, the control power supply can be turned ON and OFF by input from external device. It is operated by the external switch connected with CN 04 of control power supply unit as shown in the following figures. (CN04 is shorted when shipped.)
 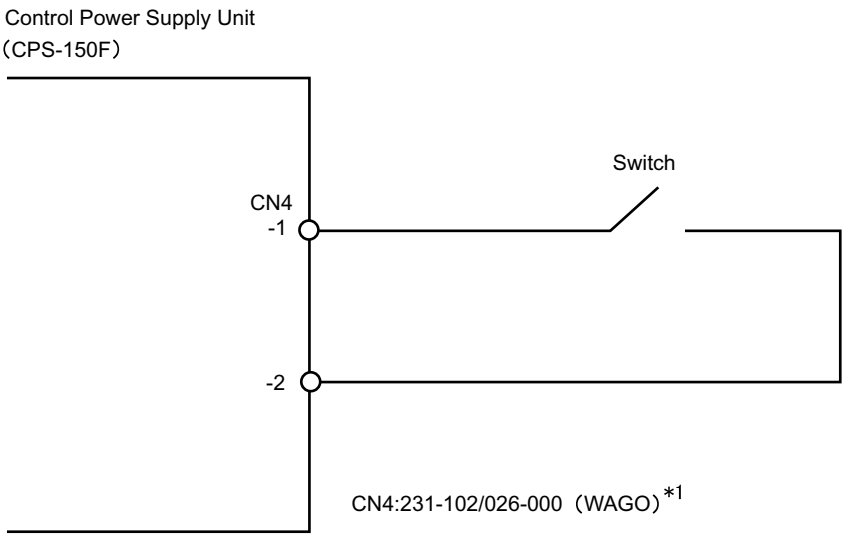

Connection to Control Power Supply Unit

See “WAGO Connector” for wiring of CN04 connector.</td></tr>
</table>

■ WAGO Connector

CN05, 06, 26 and 27 on the I/O contactor unit (JZNC-XIU01) and CN04 on the control power supply unit are equipped with a connector made by WAGO.
The “wiring tool for the WAGO connector” is necessary to wire the WAGO connector.
Two of these tools are supplied with the XRC.
The wiring procedure is described as follows:

1. Insert part A of the wiring tool into one of the holes designed for the tool.

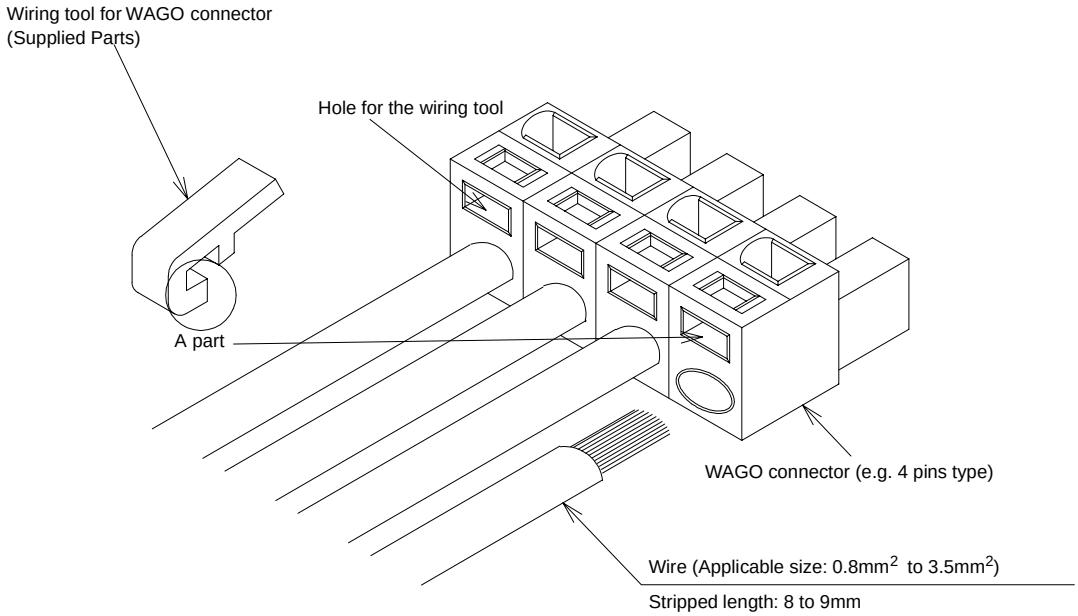

2. Insert or pull out the wire while pushing the wiring tool downward (Direction of the arrow).

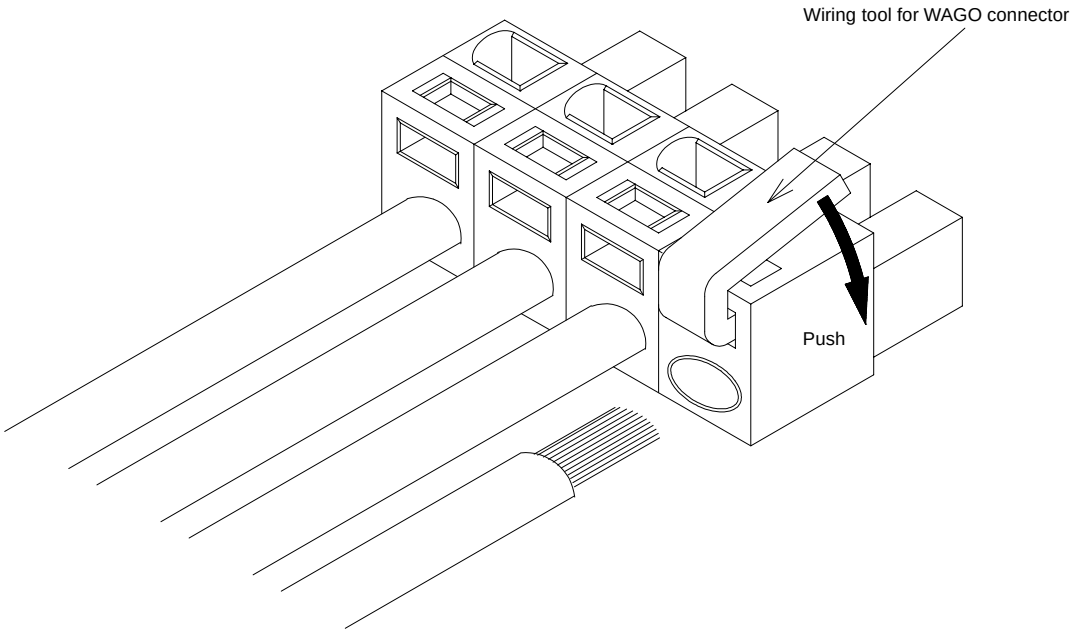

3. Remove the wiring tool from the connector. (Complete)
   Keep this wiring tool for the future use.

7.3 I/O Contactor Unit

The I/O contactor unit consists of the Specific I/O circuit board (JANCD-XIO01), General I/O circuit board (JANCD-XIO02) and Contactor circuit board (JANCD-XTU01) to control the contactor sequence of the servo power supply.

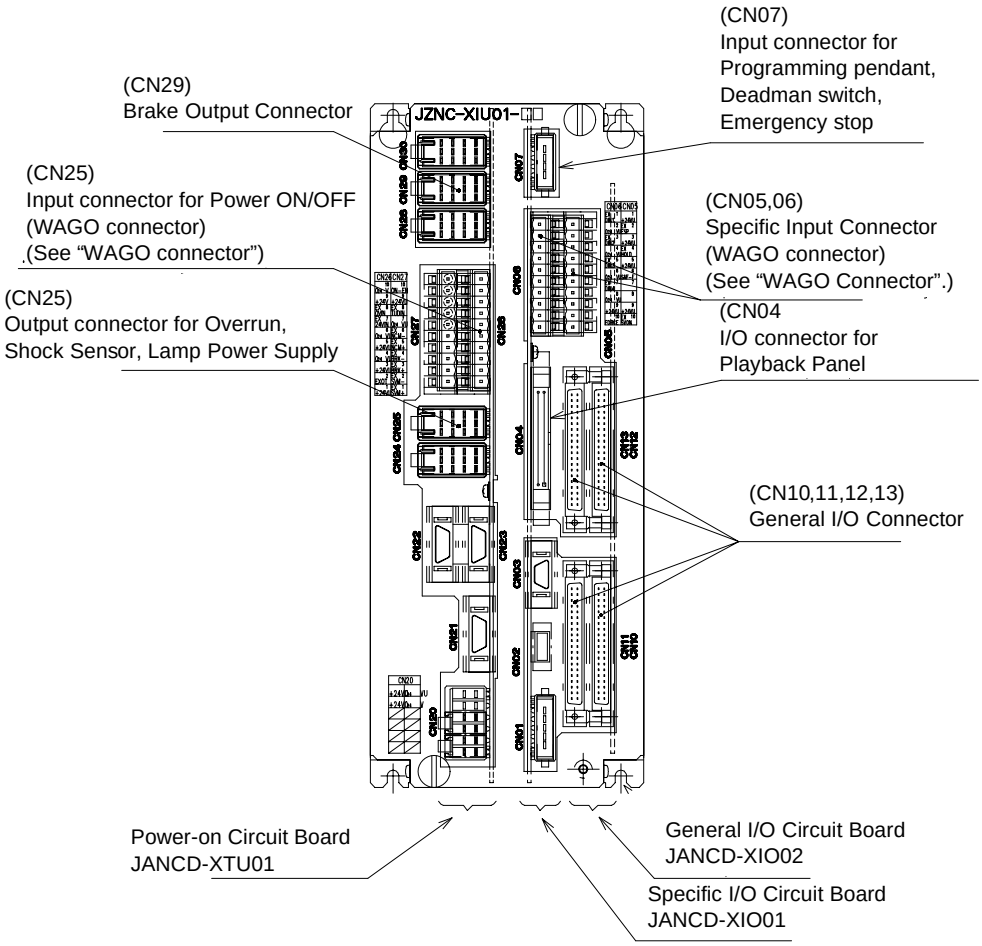

I/O Contactor Unit Configuration (JZNC-XIU01)

SUPPLE-MENT See "WAGO Connector".

7.3.1 Specific Input Circuit Board (JANCD-XIO01)

The specific input circuit board is controlled by the system control circuit board (JANCD-XCP 01), and the main function of this board is as follows:

- Specific I/O circuit, for instance I/O circuit for servo power supply contactor and emergency stop circuit
- I/O for playback panel (IN / OUT = 8 points / 8 points)
- Direct input (4 points)
- Deadman Switch Control Circuit

CAUTION

- Before use, remove any jumper leads from the specific input signals.

  The unit may malfunction resulting in injury or damage to equipment.

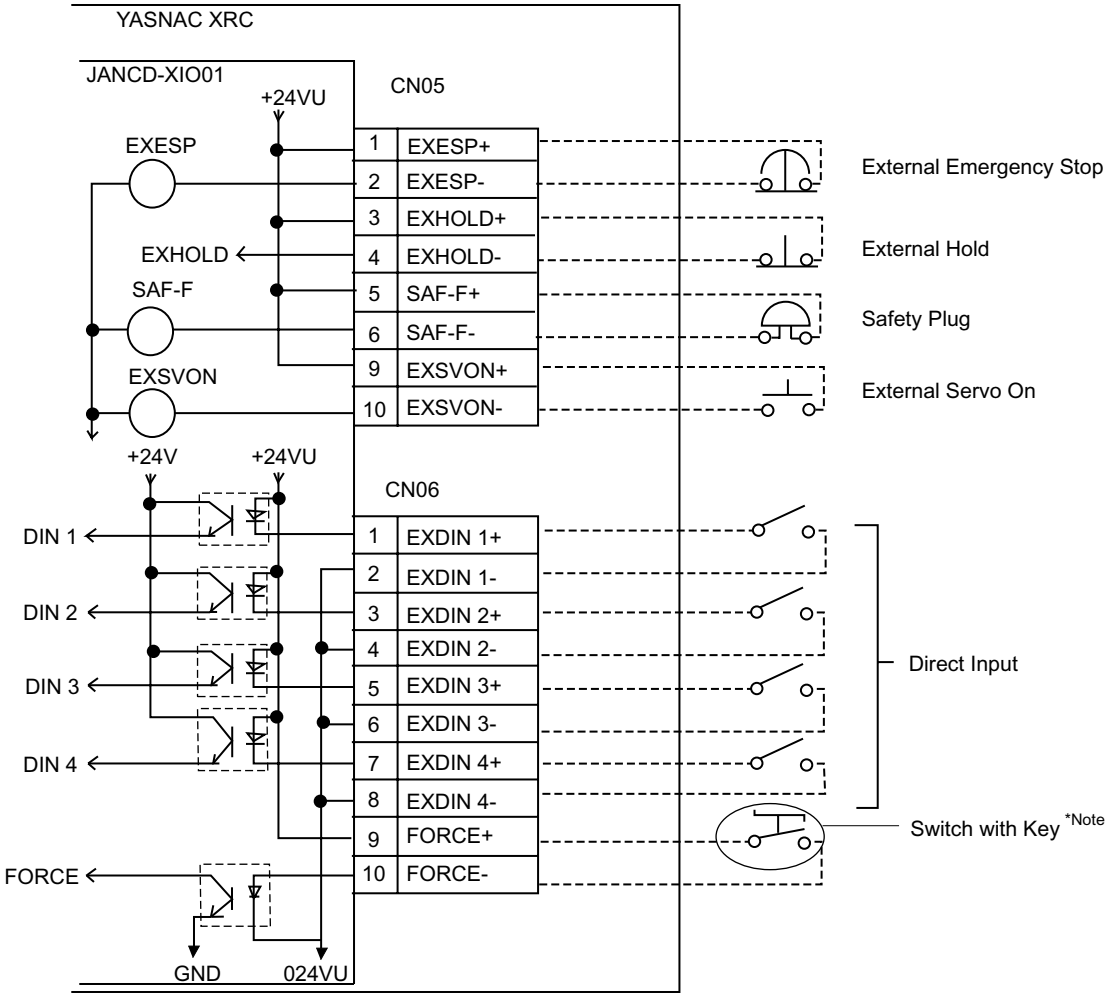

JANCD-XIO01 I/O Allocation and Connection Diagram

CAUTION

Do not use the “FORCE” (Forced release) input.
If the “FORCE” input should be used for an unavoidable reason, be sure to use a switch with a key. The systems manager is responsible for storage of the key.
When “FORCE” is input, all the deadman switches become invalid, so handle with extreme care.

Direct Output for Emergency Stop (Specific Output)

XRC has “Direct Output for Emergency Stopat P.P.” and “Direct Output for Emergency Stop at Playback Panel” as Specific Output.
This emergency stop output is always effective regardless of main power supply ON/OFF of YASNAC XRC. (State output signal: NC point of contact)

- Direct Output for emergency stopat P.P.
  Connect wire with connector terminal (2XT) at the cabinet bottom. (Size of terminal:M3.5)

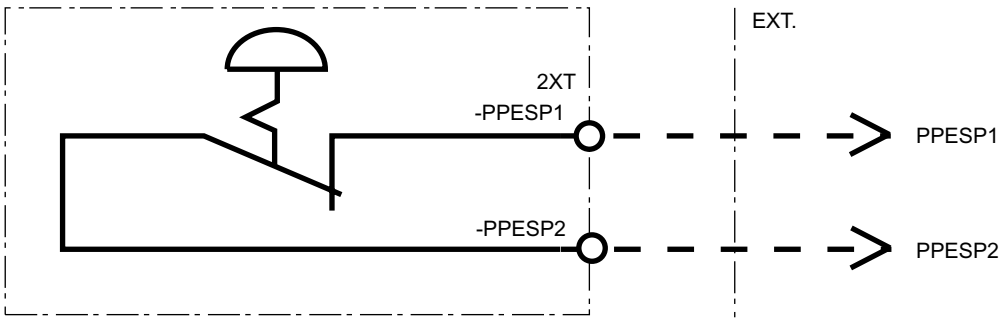

- Direct Output for emergency stop at Playback Panel
  Connect wire directly with the terminal of the play back panel emergency stop switch on the back of the door (Terminal at the left of backside of the door). (Size of terminal:M3.5)

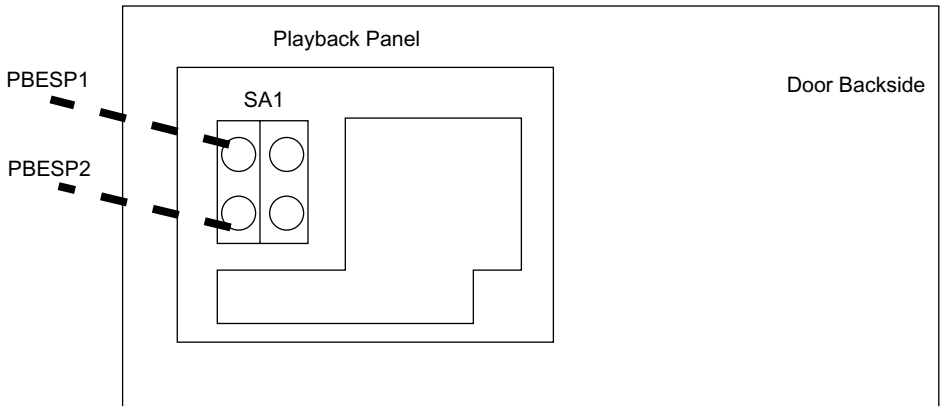

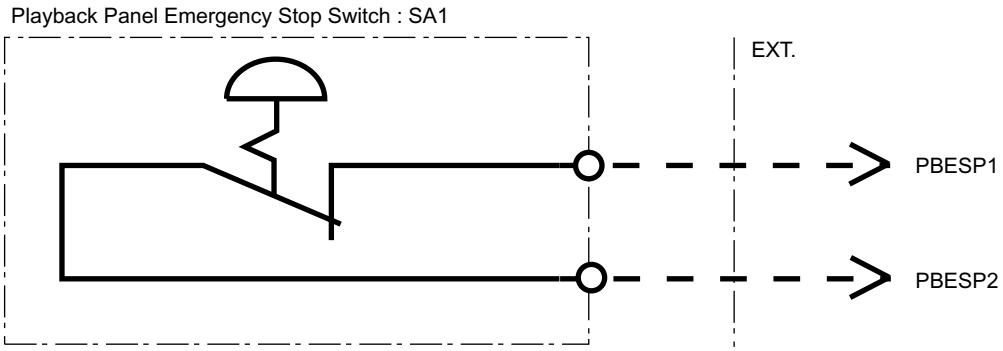

Specific Input List (XIO01)

Terminal	Input Name / Function	Factory Setting
EXESP	External emergency stop	Disabled by jumper lead
CN05 -1 -2	Use to connect the emergency stop switch of an external operation device. The servo power turns OFF and job execution stops when this signal is input. The servo power cannot be turned ON while this signal is ON.	
EXHOLD	External hold	Disabled by jumper lead
CN05 -3 -4	Use to connect the HOLD switch of an external operation device. Job execution stops when this signal is input. Starting and axis operations are disabled while this signal is ON.	
SAF-P	Safety plug	Disabled by jumper lead
CN05 -5 -6	This signal turns OFF the servo power when the door of the safeguard is opened. Connect to the interlock signal from the safety plug attached to the door. The servo power turns OFF when the interlock signal is input. The servo power cannot be turned ON while this signal is ON. However, in the teach mode, this function is disabled.	
EXSVON	Servo ON	Open
CN05 -9 -10	Use to connect the servo On switch of an external operation device. The servo power turns ON when this signal is input.	
DIN1	Direct-in 1	Open
CN06 -1 -2	Used for the search function.	
DIN2	Direct-in 2	Open
CN06 -3 -4	Used for the search function.	
DIN3	Direct-in 3	Open
CN06 -5 -6	Used for the search function.	

Specific Input List (XIO01)

Terminal	Input Name / Function	Factory Setting
DIN	Direct-in 4	Open
CN06 -7 -8	Used for the search function.	
FORCE	Forced reset, input	Open
CN06 -9 -10	Do not use the “FORCE” (Forced release) input. If the “FORCE” input should be used for an unavoidable reason, be sure to use a switch with a key. The systems manager is responsible for storage of the key. When “FORCE” is input, all the deadman switches become invalid, so handle with extreme care.	

■ Safety Plug Input Signal

The manipulator must be surrounded by a safeguard and a door protected by an interlock function. The door must be opened by the technician to enter and the interlock function stops the robot operation when the door is open. The safety plug input signal is connected to the interlock signal from the gate.

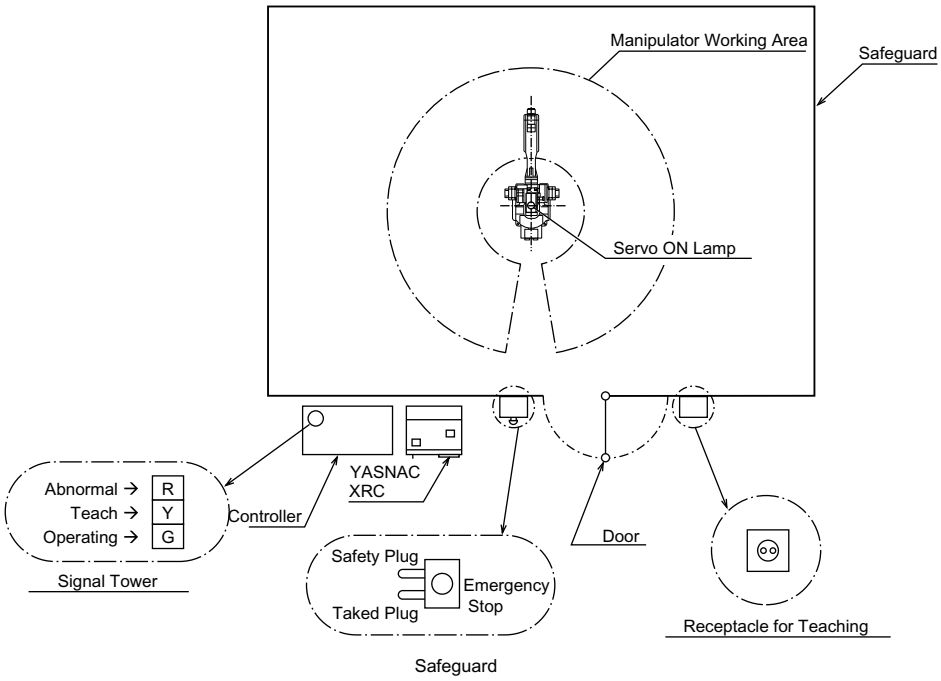

If the servo power is ON when the interlock signal is input, the servo power turns OFF. The servo power cannot be turned ON while the interlock signal is input. However, the servo power does not turn OFF when the door is opened only during the TEACH mode. In this case, the servo power can be turned ON while the interlock signal is input.

7.3.2 General I/O Circuit Board (JANCD-XIO02)

The general I/O circuit board is controlled by the system control circuit board (JANCD-XCP 01) through the specific I/O circuit board (JANCD-XIO01).
I/O can be separated as specific I/O and general I/O allocated software as follows:

- Specific I/O: IN/OUT = 24 points / 24 points
- General I/O: IN/OUT= 16 points / 16 points (relay contact output)

The specific I/O is a signal in which the part is decided in advance. The specific I/O is used when the external operation equipment, jig controller and centralized controller control the manipulator and related equipment as a system. The assignment of the general input signal depends on the applications as shown in " 7.5 General I/O Signal Assignment ". The main example using specific I/O is shown as follows.

■ Connection wire with General I/O (CN10, 11, 12, 13)

Please refer to the figure below when you manufacture the cable connecting with general I/O connector (CN10,11,12,13). (The cable side connector and the I/O terminal are the options)

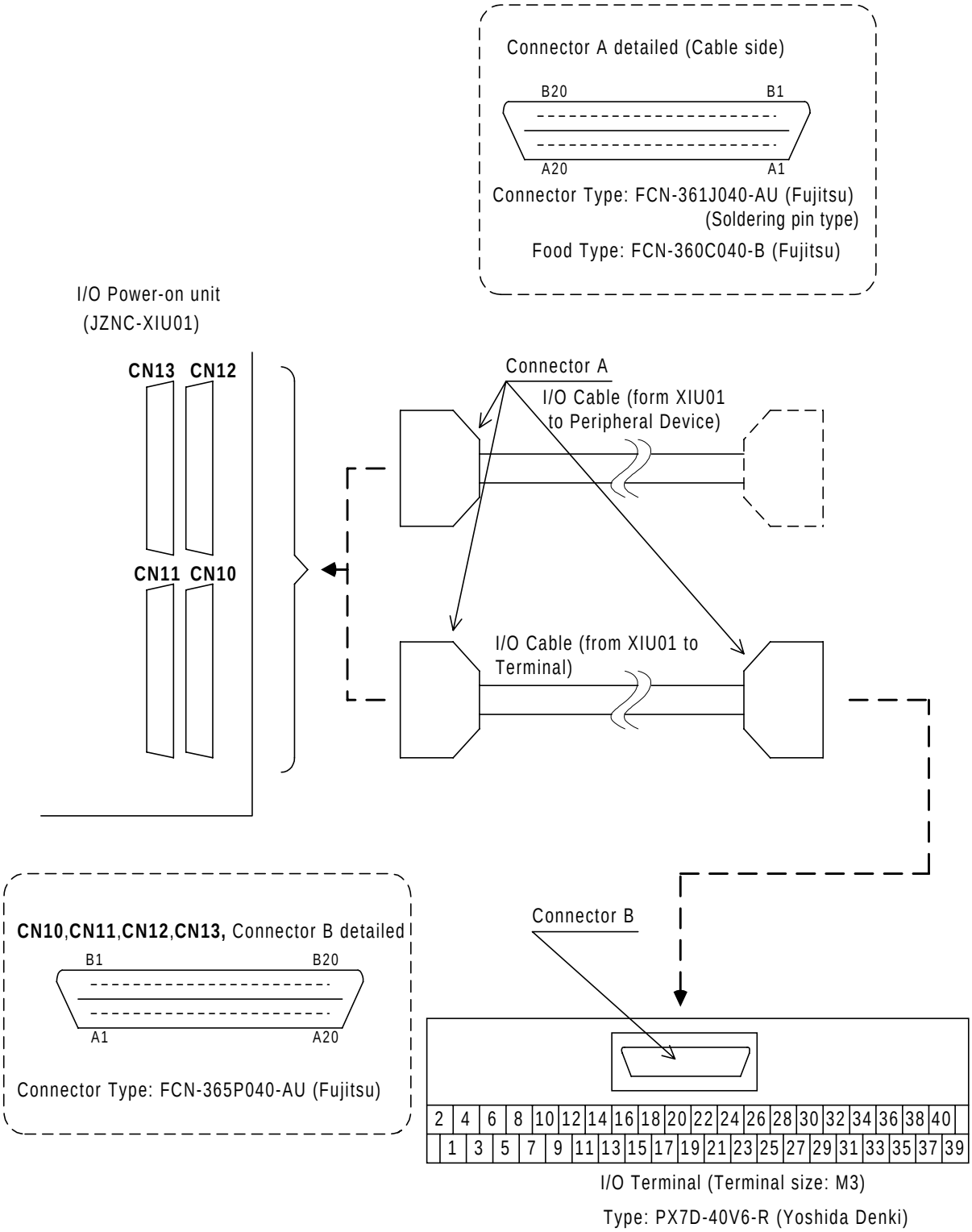

■ Specific I/O Signal Related to Start and Stop

The following signals are specific I/O signals related to start and stop.

- Servo On (depending on application: JANCD-XIO02)
- External Servo On (common to all application: JANCD-XIO01)
- External Start (depending on application: JANCD-XIO02)
- Operating (depending on application: JANCD-XIO02)
- External Hold (common to all application: JANCD-XIO01)
- External Emergency Stop (common to all application: JANCD-XIO01)

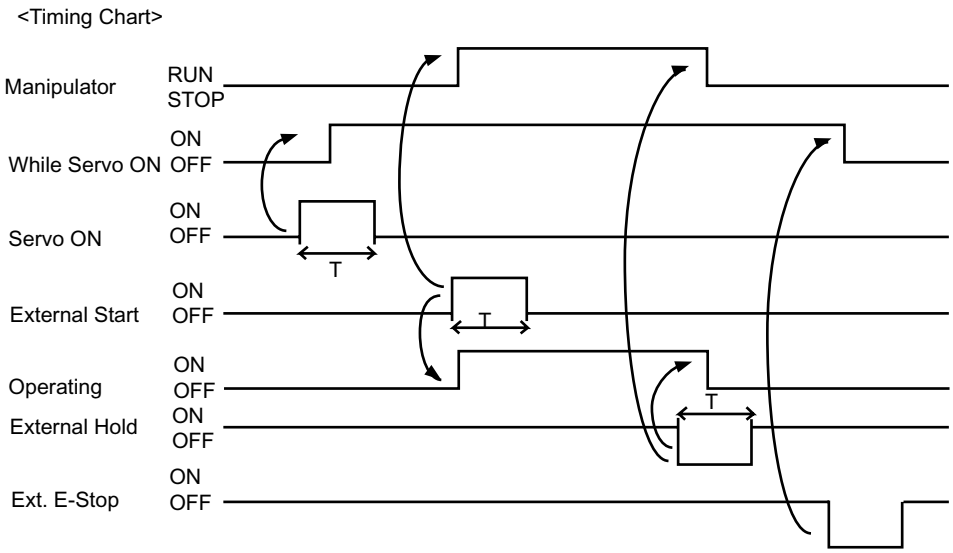

Note: Set T=100msec or more

Example of Servo ON Sequence Circuit from External Device

Only the rising edge of the servo ON signal is valid. This signal turns ON the manipulator servo power supply. The set and reset timings are shown in the following.

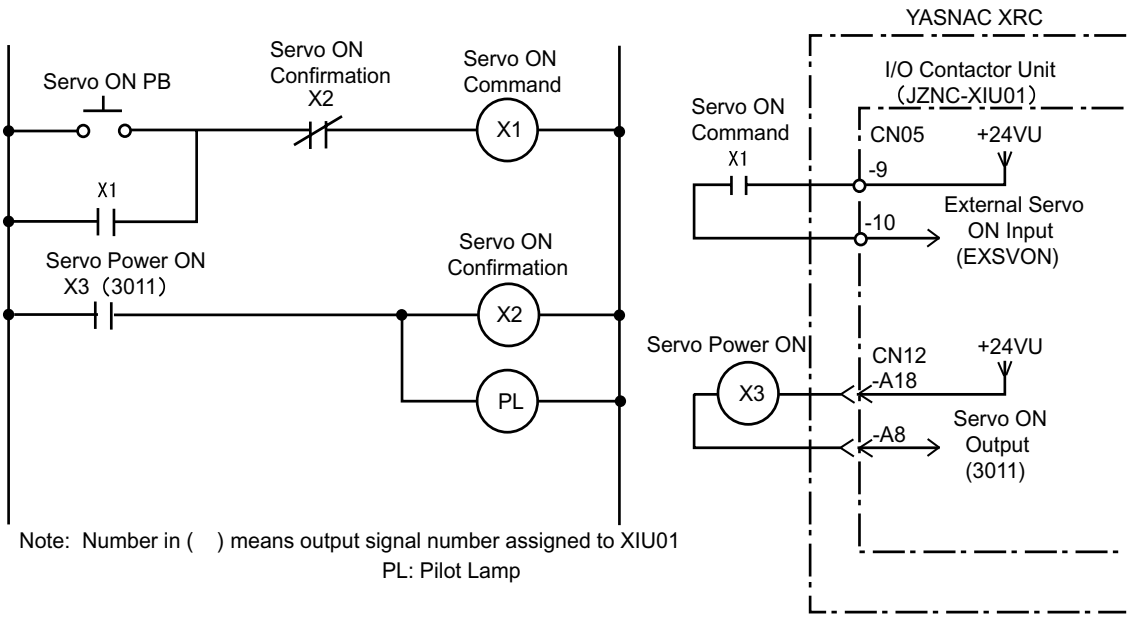

Note: Number in ( ) means output signal number assigned to XIU01
PL: Pilot Lamp

Example of Start Sequence Circuit from External Device

Only the rising edge of the external start signal is valid. This signal starts the manipulator. Reset this signal with the interlock configuration that determines if operation can start and with the playback (RUNNING) signal confirming that the robot has actually started moving.

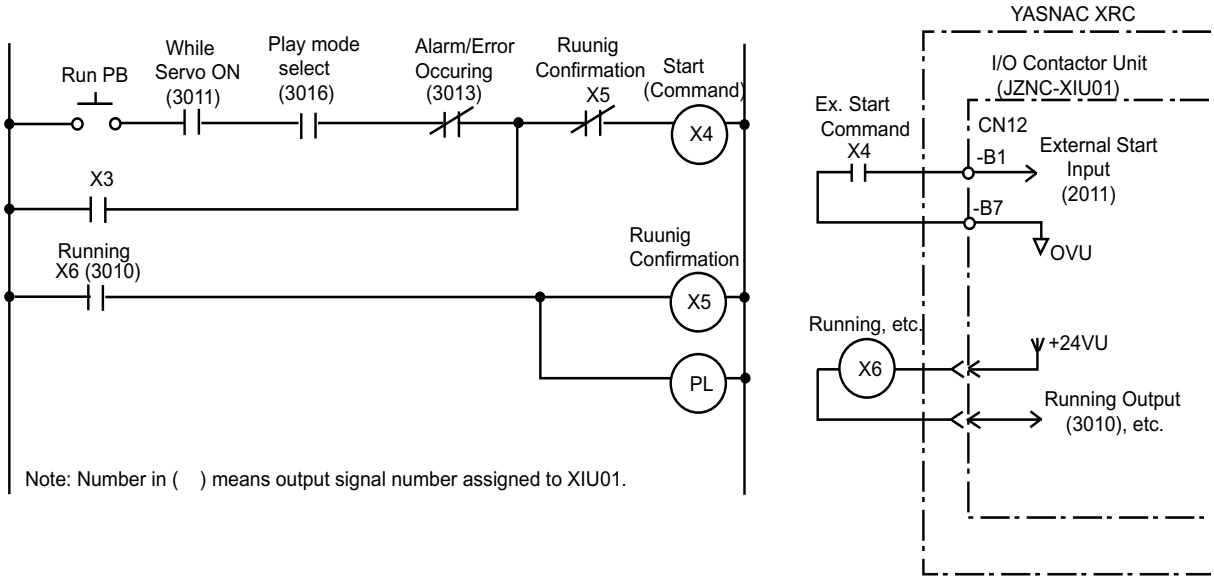

7.3.3 Power-on Circuit Board (JANCD-XTU01)

The power-on circuit board is controlled by the servo control circuit board (JASP-WRCA01). The main functions are as follows:

- Specific I/O circuit, for instance, servo power supply contactor I/O circuit and emergency stop circuit
- Brake power supply circuit and its output
- Overrun (OT) shock sensor (SHOCK) and lamp light power supply output to robot

■ Connection of Shock Sensor

Remove SHOCK- and +24VU from XIU-CN25 (Dynamic Connector), and connect the shock sensor signal SHOCK- to the robot.

Shock Sensor Connection Terminal

Terminal	Type	Factory Setting	Use Shocksensor
SHOCK-	PC-2005W	┐	┐
+24VU	PC-2005M	┘	│
SHOCK-	PC-2005M		┘

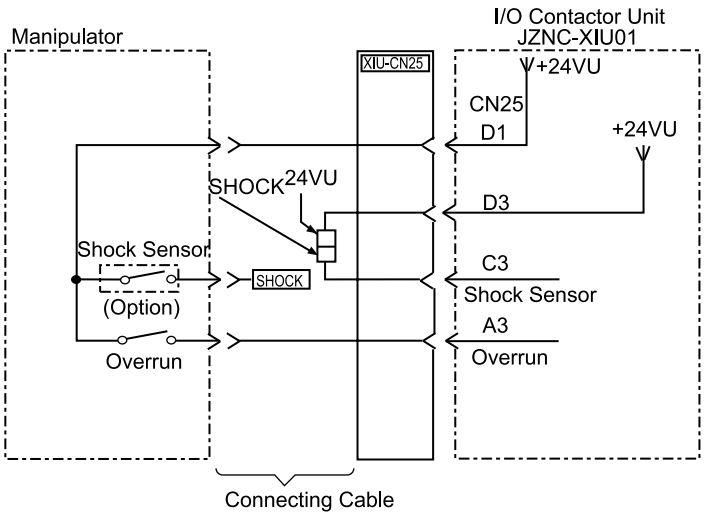

Shock Sensor Connection

SUPPLE-MENT

When the shock sensor input signal is used, the stopping method of the robot can be specified. The stopping methods are hold stop and servo power supply off. Selection of the stopping method is set in the display of the programing pendant. Refer to Explanation *1 in " 3.6 Overrun / Shock Sensor Releasing " for details.

■ Connection of External Power Supply for I/O

At factory setting, the internal power supply for I/O is used. If the external power supply for I/O is used, connect it with following procedure.

1. Remove the wire connected between CN26-7 to -9 and CN26-8 to -10 of the I/O contactor unit: JZNC-XIU01.
2. Connect +24V of the external power supply to CN26-7 and 0V to CN26-8 of the I/O contactor unit: JZNC-XIU01.

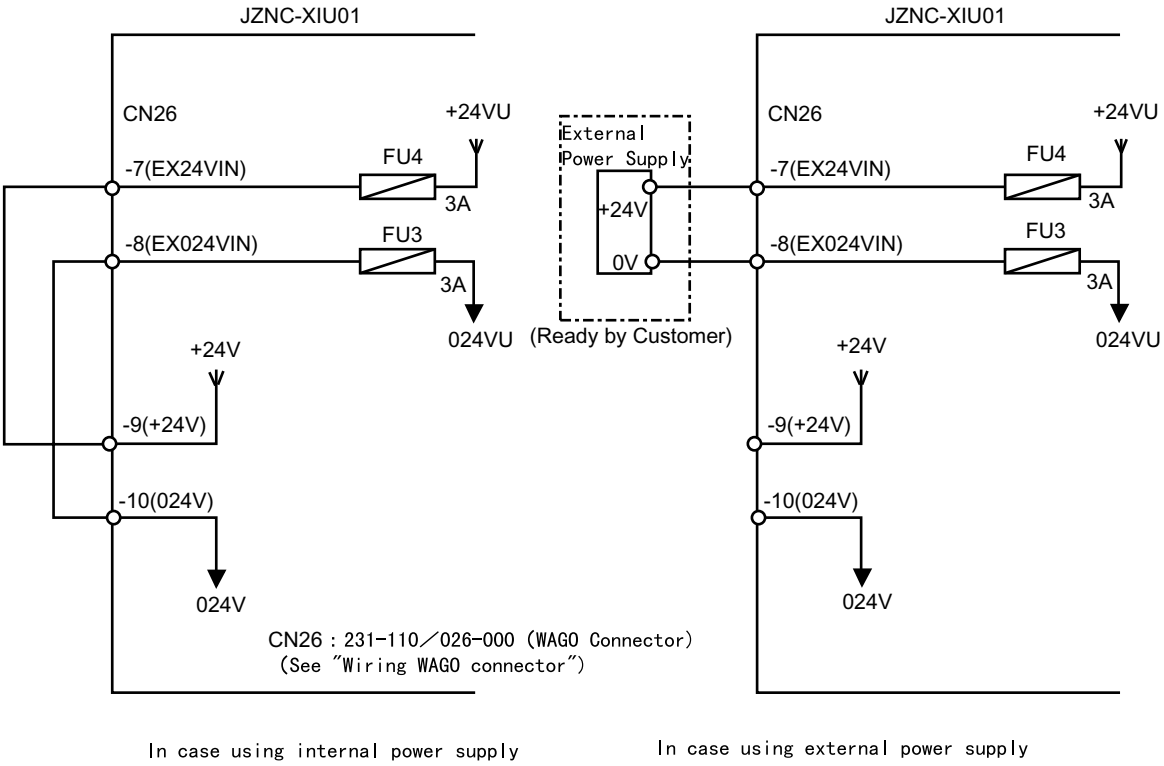

In case using internal power supply

In case using external power supply

NOTE

- The internal power supply of 24V of about 1A of XRC can be used for I/O.
  Use external 24V power supply for higher currents and to isolate the circuit inside and outside the XRC.
- The I/O power supply (+24 VU, 024 VU) has 3A fuses (FU3,FU4).
- Install the external power supply outside the XRC to avoid electric noise problems.
- When the internal power supply is selected, do not connect the line of the external power supply to the +24VU and 0VU terminals. The unit may malfunction if the external power supply is also connected.

■ Method of connecting external axis overrun signal

In a standard specification, the external axis overrun input is unused.
Please connect the signal according to the following procedures when the overrun input for an external axis is necessar , besides for the manipulator.

1. Remove wire (jumper) connected with CN26-1--2 of I/O power on unit JZNC-XIU01.

2. The overrun input of an external axis is connected between CN26-1 and -2 of I/O power on unit JZNC-XIU01 as shown in below.

CAUTION

- Remove a jumper when there is a jumper in the special input signal used.

  The injury and damage may result because it doesn't function even if the specific signal is input.

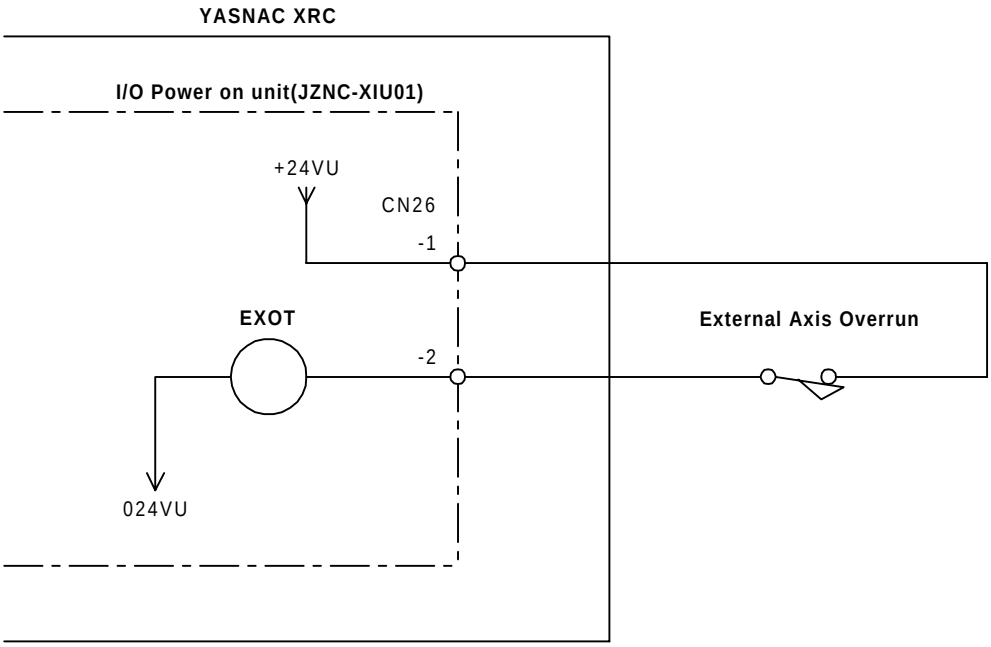

7.4 Servopack

A Servopack consists of a servo control circuit board (JASP-WRCA01), a servo control power supply (JUSP-RCP01AAB), a converter and an amplifier (Refer to attached table “Servopack Configuration”).
As for large capacity type, the converter and the servo power supply are separate.

7.4.1 Servopack Configuration

Servopack configuration (Small Capacity Type)

Component			SV3X		UP6	
			Type	Capacity	Type	Capacity
Servopack			CACR-SV3AAA	-	CACR-UP6AAC	-
	Converter		JUSP-ACP05JAA	5A	JUSP-ACP05JAA	5A
	Amplifier	S	JUSP-WS02AA	200W	JUSP-WS05AAY17	500W
		L	JUSP-WS02AA	200W	JUSP-WS10AAY17	1KW
		U	JUSP-WS01AA	100W	JUSP-WS05AAY17	500A
		R	JUSP-WSA5AA	50W	JUSP-WS01AA	100W
		B	JUSP-WSA5AA	50W	JUSP-WS01AA	100W
		T	JUSP-WSA5AA	50W	JUSP-WS01AA	100W
	Servo control circuit board		JASP-WRCA01	-	JASP-WRCA01	-
	Servo control power supply		JUSP-RCP01AAB	-	JUSP-RCP01AAB	-

Servopack configuration (Small Capacity Type)

Component			SK16X	
			Type	Capacity
Servopack			CACR-SK16AAC	-
	Converter		JUSP-ACP05JAA	5A
	Amplifier	S	JUSP-WS10AAY17	1KW
		L	JUSP-WS10AAY17	1KW
		U	JUSP-WS10AAY17	1KW
		R	JUSP-WS02AA	200W
		B	JUSP-WS02AA	200W
		T	JUSP-WS02AA	200W
	Servo control circuit board		JASP-WRCA01	-
	Servo control power supply		JUSP-RCP01AAB	-

Servopack configuration (Large Capacity Type)

Component			SK16MX		SK45X	
			Type	Capacity	Type	Capacity
Servopack			CACR-UP16MAAB	-	CACR-SK45AAB	-
	Amplifier	S	JUSP-WS30AA	3KW	JUSP-WS30AA	3KW
		L	JUSP-WS20AA	2KW	JUSP-WS20AA	2KW
		U	JUSP-WS20AA	2KW	JUSP-WS20AA	2KW
		R	JUSP-WS02AA	200KW	JUSP-WS10AA	1KW
		B	JUSP-WS02AA	200KW	JUSP-WS10AA	1KW
		T	JUSP-WS02AA	200KW	JUSP-WS10AA	1KW
	Servo control circuit board		JASP-WRCA01	-	JASP-WRCA01	-
Converter			JUSP-ACP35JAA	25A	JUSP-ACP25JAA	25A
	Servo control power supply		JUSP-RCP01AAB	-	JUSP-RCP01AAB	-

Servopack configuration (Large Capacity Type)

Component			UP130, UP165		UP200, UP130R	
			Type	Capacity	Type	Capacity
Servopack			CACR-UP130AAB	-	CACR-UP130AABY18	-
	Amplifier	S	JUSP-WS60AA	6KW	JUSP-WS60AAY18	6KW
		L	JUSP-WS60AA	6KW	JUSP-WS60AAY18	6KW
		U	JUSP-WS60AA	6KW	JUSP-WS60AA	6KW
		R	JUSP-WS20AAY13	2KW	JUSP-WS20AAY13	2KW
		B	JUSP-WS15AAY13	1.5KW	JUSP-WS15AAY13	1.5KW
		T	JUSP-WS15AAY13	1.5KW	JUSP-WS15AAY13	1.5KW
	Servo control circuit board		JASP-WRCA01	-	JASP-WRCA01	-
Converter			JUSP-ACP35JAA	35A	JUSP-ACP35JAA	35A
	Servo control power supply		JUSP-RCP01AAB	-	JUSP-RCP01AAB	-

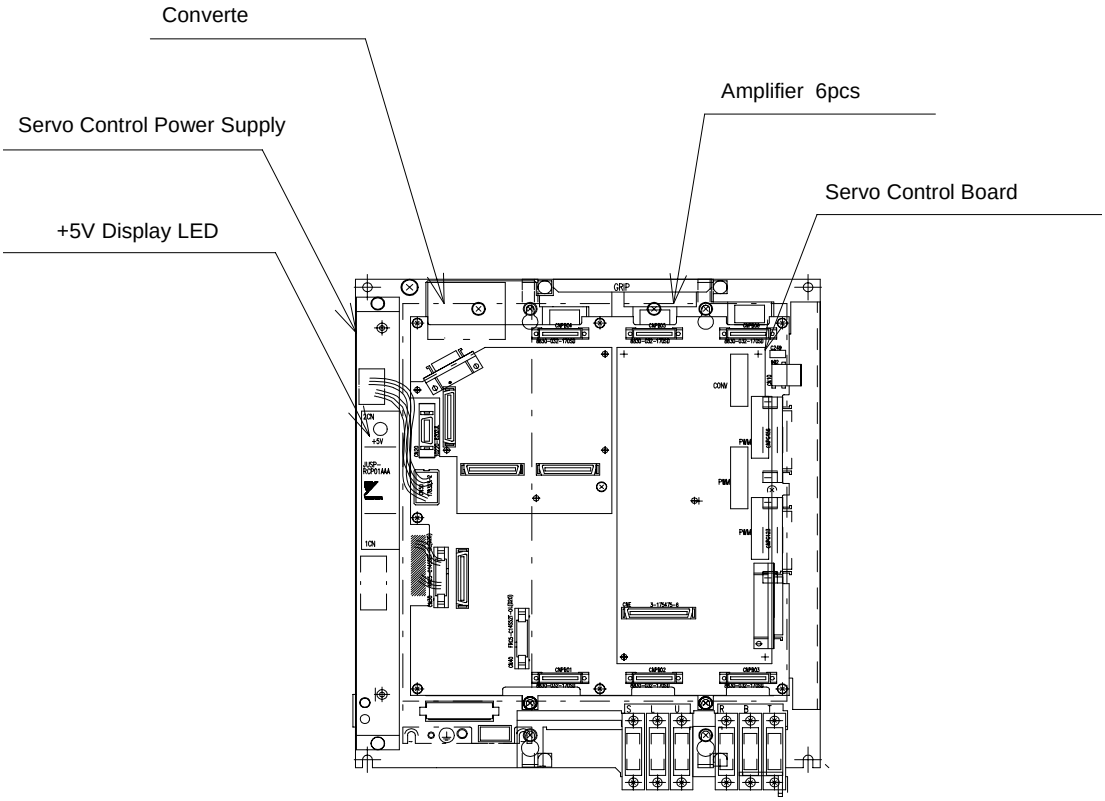

Servopack Dimensions for SV3X, UP6, SK16X

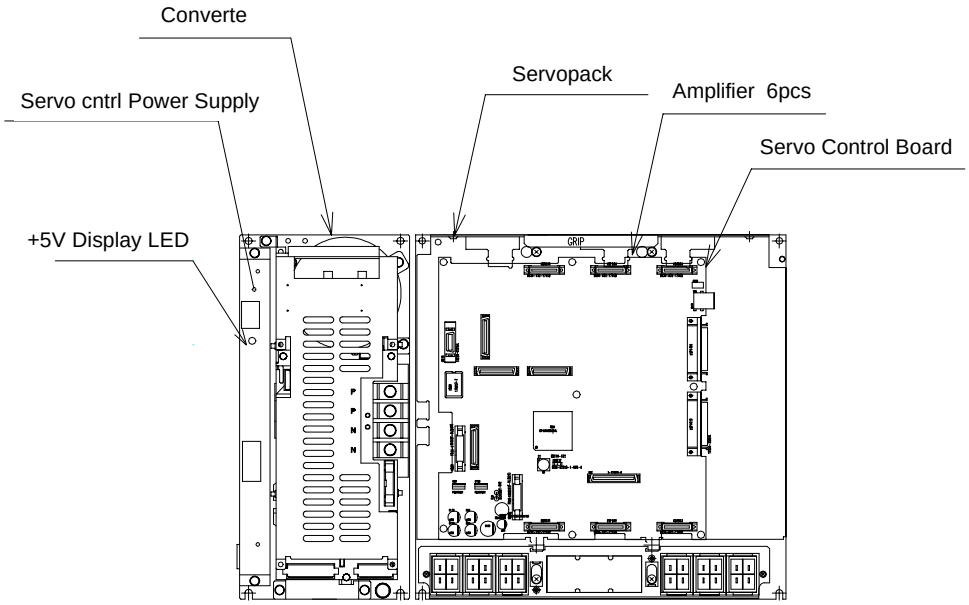

Servopack Dimensions for SK16MX, SK45

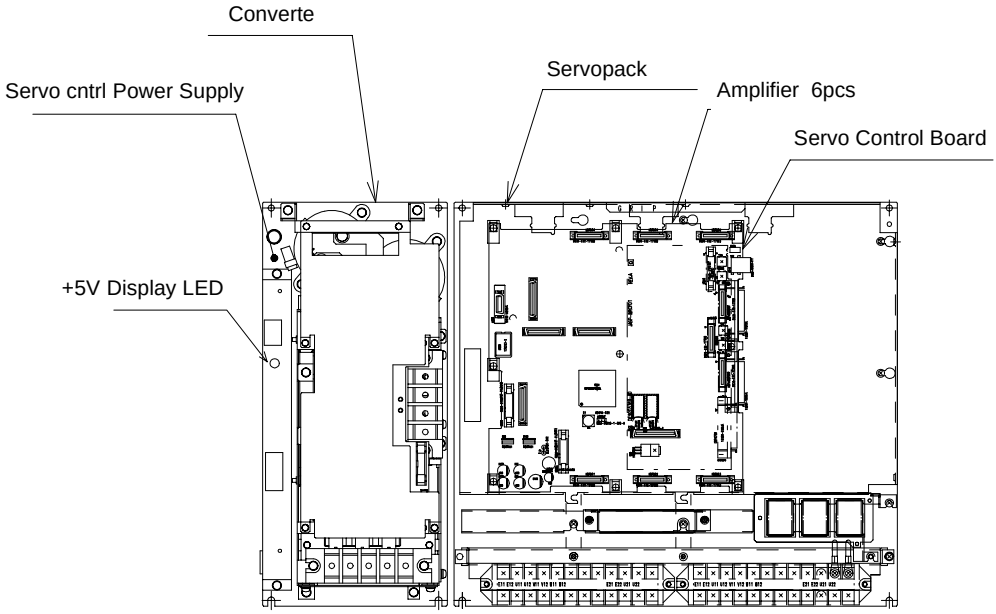

Servopack Dimensions for UP130, UP165, UP200, UP130R

7.4.2 Description of Each Unit

■ Servo Control Circuit board (JASP-WRCA01)

This is a circuit board which controls the servo motors of six axes of the manipulator. This board controls the converter, amplifiers and the contactor circuit board (JANCD-XTU01) of the I/O contactor unit. The power source is supplied by a servo control power supply.

■ Servo Control Power Supply (JUSP-RCP01AAB)

This unit generates DC power (+5V, +7V, ±15V) for the servo control board. AC input (Single phase:AC200/220V) is supplied by power supply unit.

Items		Specification
AC input	Rated Input Voltage	AC200V to 220V
	Voltage Fluctuation Range	+10% to -15% (AC170V to 242V)
	Frequency	50/60Hz (48Hz to 62Hz)
Output	+ 5V	5A
	+ 7V	2.5A
	±15V	1.3A(+15V), 0.6A(-15V)
Indicator	+5V	This lights when +5V power supply is output. (Color: Green)

■ Converter

This exchanges the power source (3-phase: AC200/220V) supplied by the power supply unit for DC power source and supplies the power to amplifiers for each axis.

■ Amplifier

This exchanges the DC power source supplied by a converter for a 3-phase motor power source and outputs to each servo motor.

7.5 General I/O Signal Assignment

7.5.1 Arc Weldin

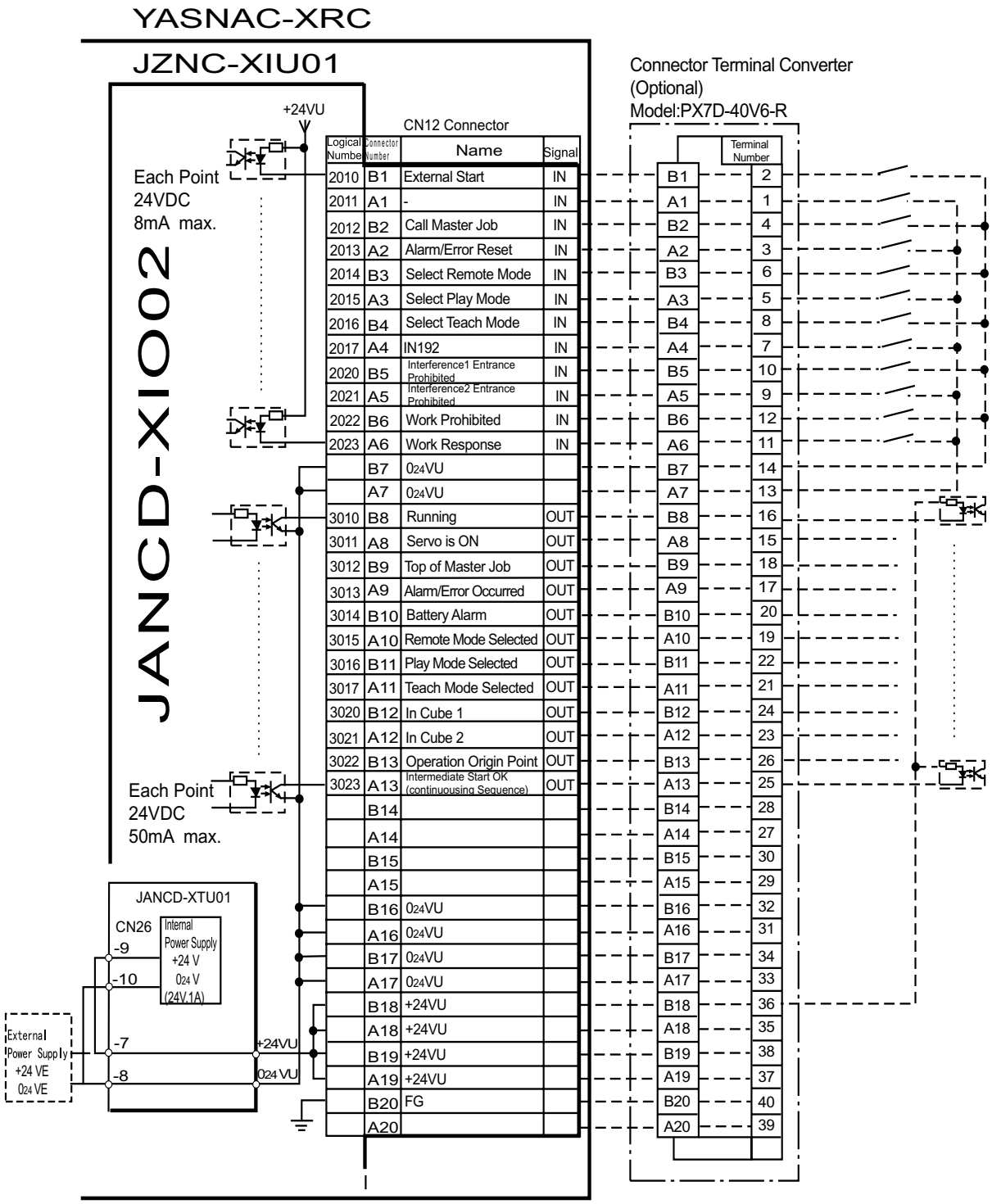

* Remove Jumper-pin between CN26-9 and -7, CN26-10 and -8 when a external power supply is used.

JANCD-XIO02 (CN12 Connector) I/O Allocation and Connection Diagram

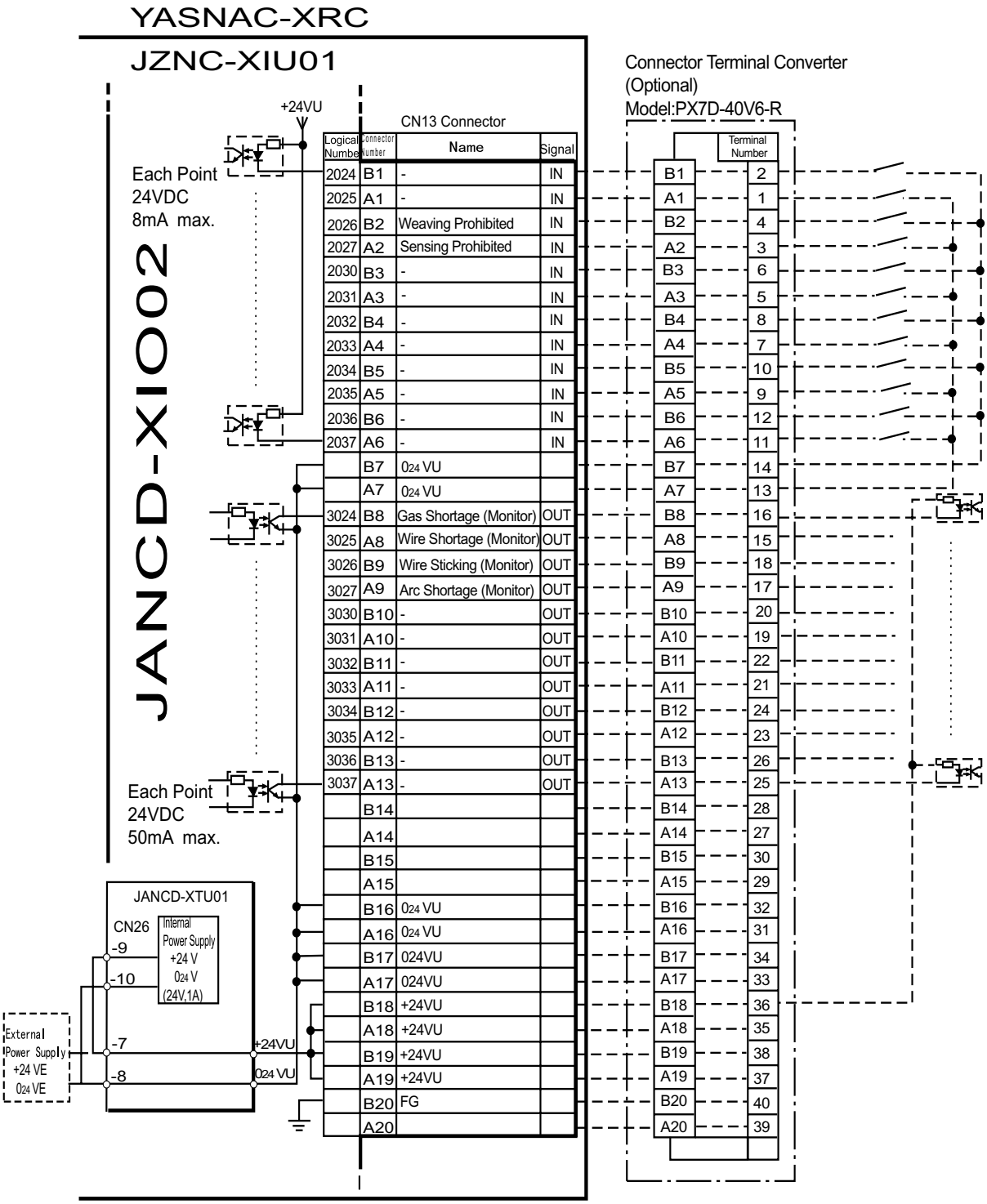

* Remove Jumper-pin between CN26-9 and -7, CN26-10 and -8 when a external power supply is used.

JANCD-XIO02 (CN13 Connector) I/O Allocation and Connection Diagram

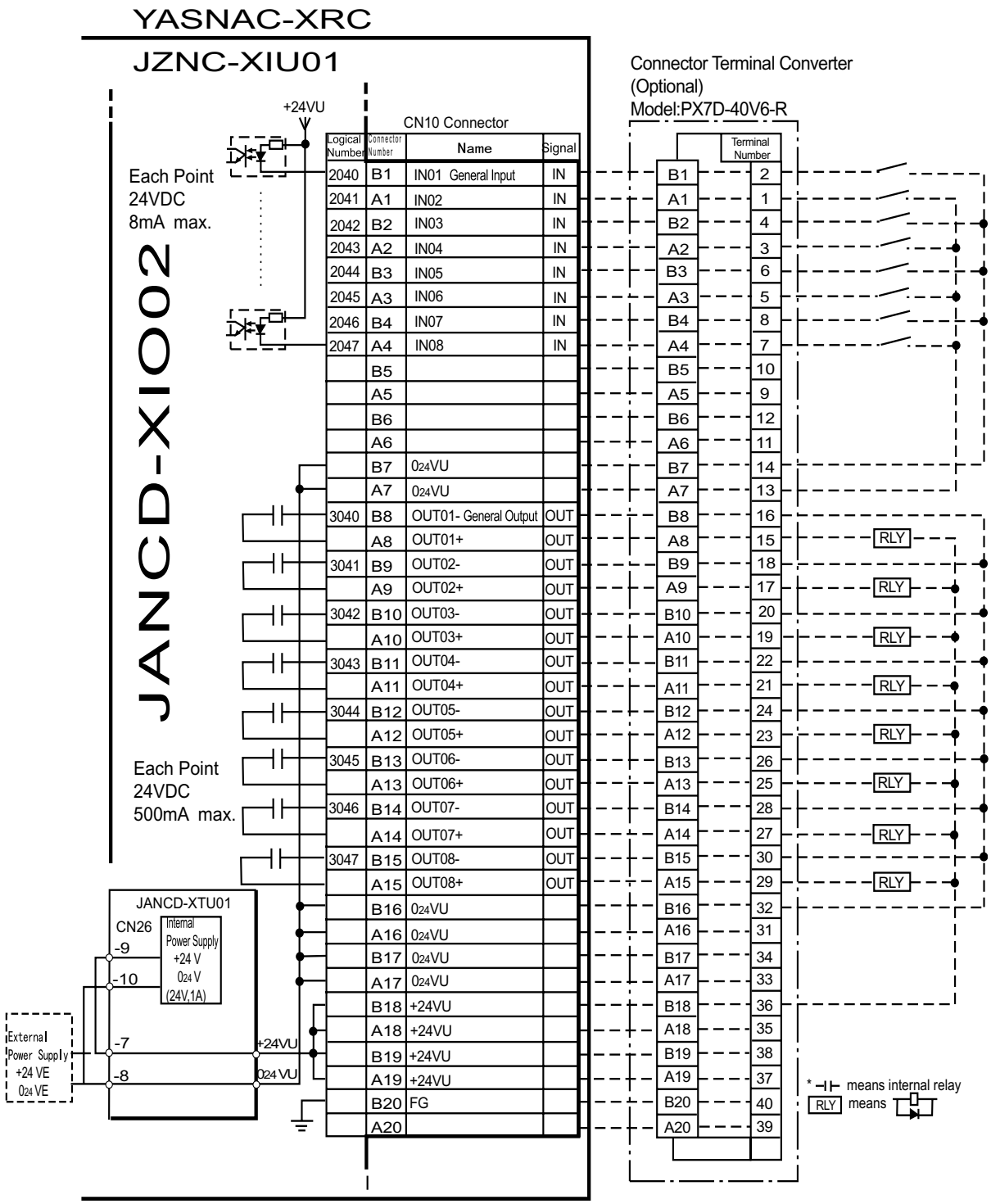

* Remove Jumper-pin between CN26-9 and -7, CN26-10 and -8 when a external power supply is used.

JANCD-XIO02 (CN10 Connector) I/O Allocation and Connection Diagram

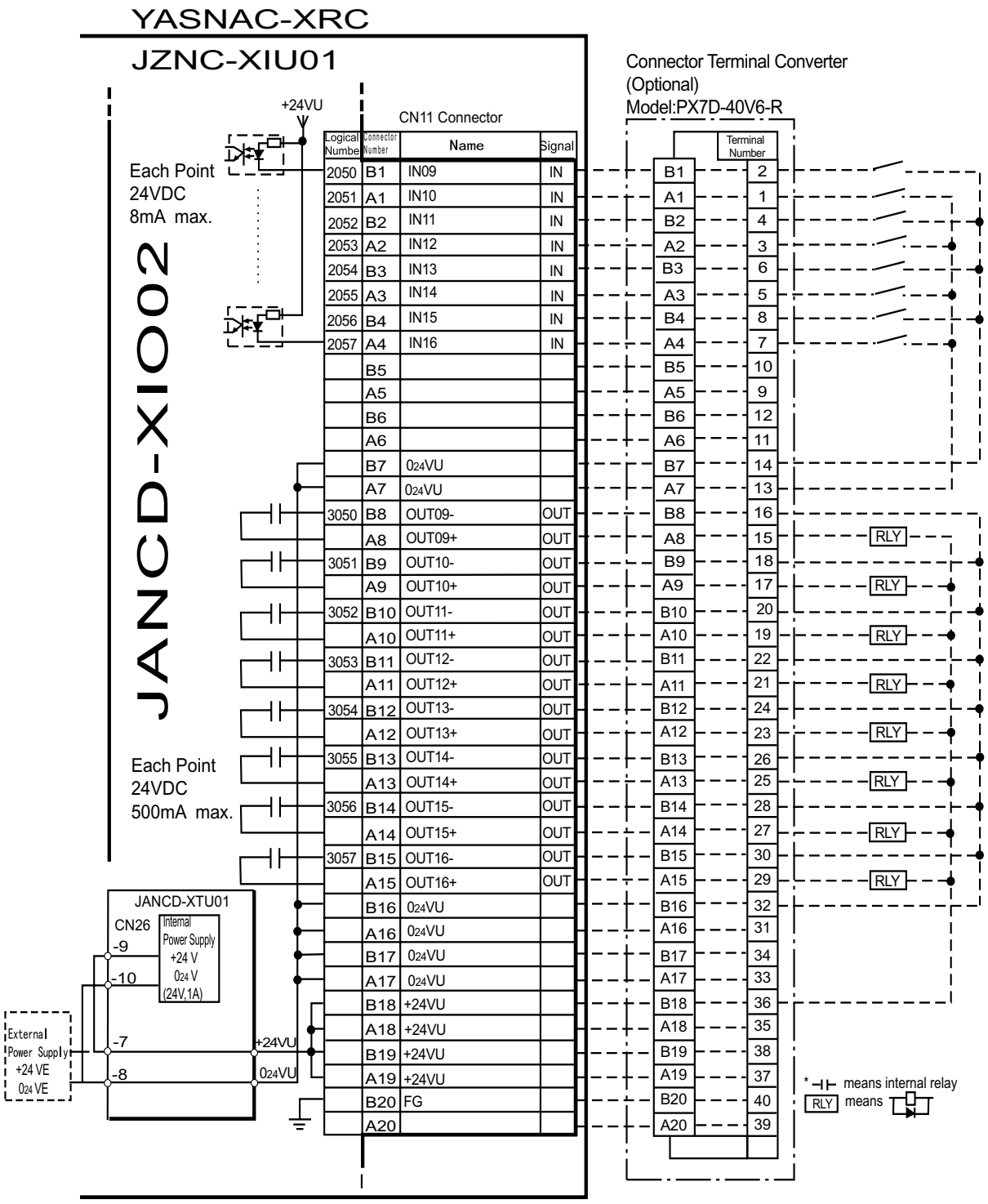

* Remove Jumper-pin between CN26-9 and -7, CN26-10 and -8 when a external power supply is used.

JANCD-XIO02 (CN11 Connector) I/O Allocation and Connection Diagram

Specific Input List XIU01 (Arc Welding)

Logical Number	Input Name / Function	Logical Number	Input Name / Function
2010	EXTERNAL START Functions the same as the [START] button in the playback panel. Only the rising edge of the signal is valid. It starts robot operation (playback). This signal is invalid if external start is prohibited from the playback condition display.	2020	INTERFERENCE 1 ENTRANCE PROHIBITED If the manipulator attempts to enter the cub 1*2 area while this signal is ON, the manipulator goes to wait status (with servo power ON). During wait status, the manipulator operation restarts if this signal turns OFF.
2012	CALL MASTER JOB Only the rising edge of the signal is valid. It calls up the top of the robot program, that is the top of the master job *1. This signal is invalid during playback, during teach-lock and when play master or call is prohibited (set from the playback operation condition display).	2021	INTERFERENCE 2 ENTRANCE PROHIBITED If the manipulator attempts to enter the cub 2*2 area while this signal is ON, the manipulator goes to wait status (with servo power ON). During wait status, the manipulator operation restarts if this signal turns OFF.
2013	ALARM/ERROR RESET After an alarm or error has occurred and the cause been corrected, this signal resets the alarm or error.	2022	WORK PROHIBITED (Arc Generation Prohibited) Arc generation is prohibited while this signal is ON. Arc generation starts when this signal turns OFF inside the arc-generation area. Use this signal to confirm teaching.
2014	SELECT REMOTE MODE Functions the same as [REMOTE] on the playback panel. Valid only while the signal is ON. It selects the REMOTE mode.	2023	WORK RESPONSE (Pseudo Arc ON Response) This signal is used as a pseudo signal in cases that “Arc Generation Confirmation” signal is not equipped on a welding power supply. Wire this signal ON normally (short to OV).
2015	SELECT PLAY MODE Functions the same as [MODE] on the playback panel. Only the rising edge of the signal is valid. It selects the PLAY mode. If designated simultaneously with other modes, the TEACH mode takes priority. This signal is invalid if external mode selection is prohibited from the operation condition display.	2026	WEAVING PROHIBITED Weaving is prohibited while this signal is ON. Use this signal to check taught steps and movements without performing the weaving operation.
2016	SELECT TEACH MODE The TEACH mode is selected if this signal turns ON during PLAY mode. Switching to other modes is disabled while this signal is ON. If this signal turns ON while the SELECT PLAY MODE signal is ON, this signal takes priority and the TEACH mode is selected.	2027	SENSING PROHIBITED Arc sensing is prohibited while this signal is ON. Use this signal to check taught steps and movements if an arc sensor is mounted.

***1** A master job is a job (program) which can be called by CALL MASTER JOB. Other functions are the same as for normal jobs. Normally, the parent job, which manages the child jobs called up immediately after the power is turned ON, is set as the master job.

***2** See " 3.7 Interference Area ".

Specific Output List XIU01 (Arc Welding)

Logical Number	Output Name / Function	Logical Number	Output Name / Function
3010	RUNNING This signal signifies that the job is running. (Signifies that the job is running, system status is waiting reserved start, or test run is running.) This signal status is the same status as [START] in the playback panel.	3021	IN CUBE 2 This signal turns ON when the current tool center point lies inside a pre-defined space (Cube 2). Use this signal to prevent interference with other manipulators and jigs.
3011	SERVO IS ON This signal signifies that the servo power is turned ON, internal processing such as current position creation is complete, and the system is able to receive the START command. This signal turns OFF when the servo power supply turns OFF. It can be used for XRC status diagnosis for an external start.	3022	OPERATION ORIGIN POINT (IN CUBE 24)*1 This signal turns ON when the current tool center point lies inside a the operation origin area. Use this signal to evaluate whether the robot is in the start position.
3012	TOP OF MASTER JOB This signal signifies that the execution position is the top of the master job. This signal can be used to confirm that the master job has been called.*2	3023	INTERMEDIATE START OK This signal turns ON when the manipulator operates. It turns OFF when the currently executed line is moved with the cursor or when editing operation is carried out after HOLD is applied during operation. Therefore, this signal can be used as a restart interlock after a HOL is applied. However, it also turns ON in the TEACH mode and TEACH MODE SELECTED signal must be referred together.
3013	ALARM/ERROR OCCURRED This signal signifies that an alarm or an error occurred. If a major error occurs, this signal remains ON until the main power is turned OFF.	3024	GAS SHORTAGE (MONITOR) This signal stays ON while the gas shortage signal from the welding power supply is ON.
3014	BATTERY ALAR This signal turns ON to notify that the battery requires replacing when the voltage drops from the battery for backup memory of the encoder. Major problems may result if memory data is lost because of an expired battery. It is recommended to avoid these problems by using this signal as a warning signal.	3025	WIRE SHORTAGE (MONITOR) This signal status ON while the wire shortage signal from the welding power supply is ON.
3015 t 3017	REMOTE/PLAY/TEACH MODE SELECTED This signal notifies the current mode setting. These signals are synchronized with the lamps [REMOTE] and [MODE] in the playback panel. The signal corresponding to the selected mode turns ON.	3026	WIRE STICKING (MONITOR) The sticking check is conducted automatically when the arc turns off. If wire sticking is detected, this signal remains ON until the stick is released.
3020	IN CUBE 1 This signal turns ON when the current tool center point lies inside a pre-defined space (Cube 1). Use this signal to prevent interference with other manipulators and jigs.	3027	ARC SHORTAGE (MONITOR) This signal stays ON while the arc shortage signal from the welding power supply is ON.

***1** The operation origin cube and Cube 24 are same.

***2** This signal is not output during operation.

7.5.2 Handling

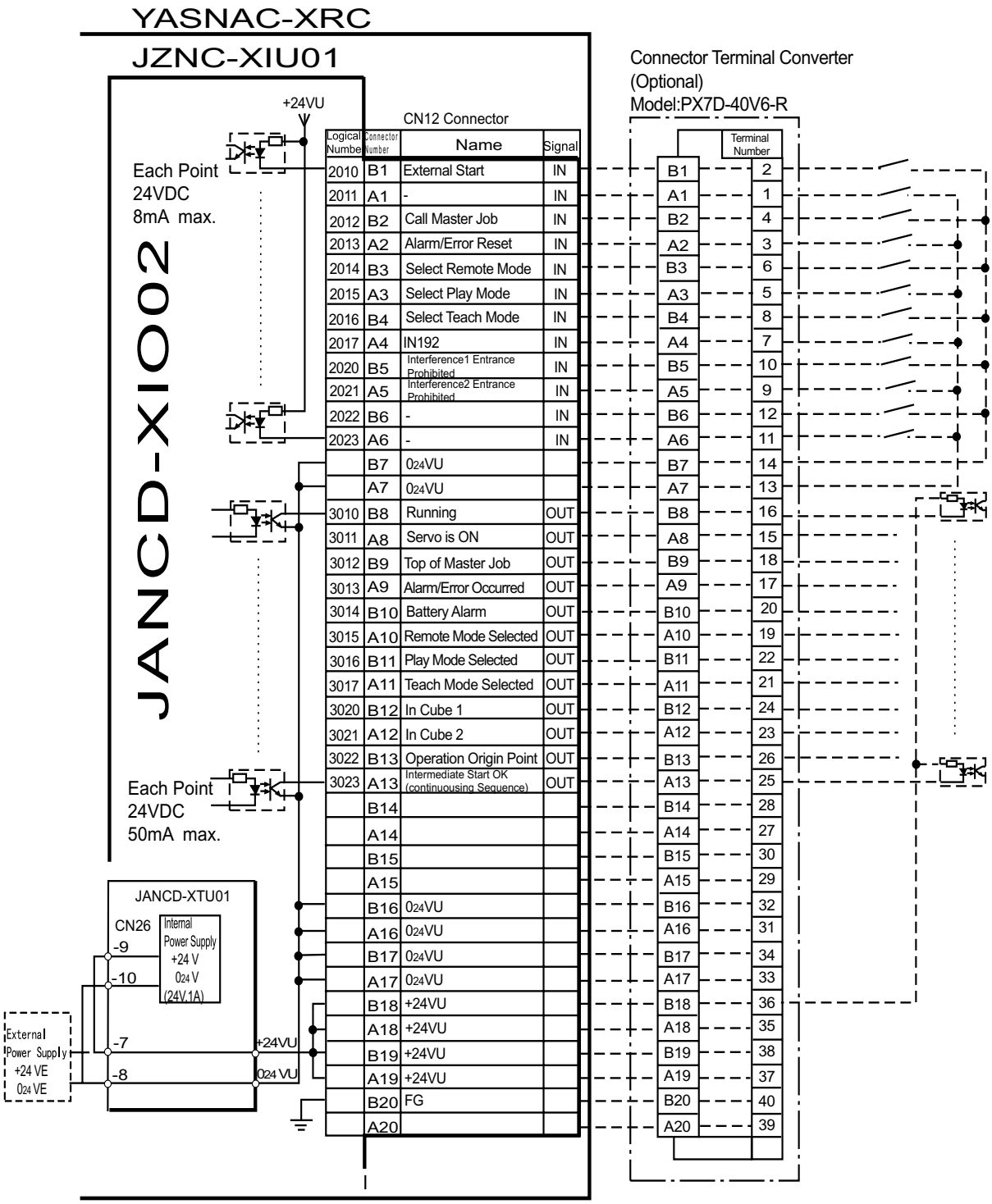

Logical Number	Connector Number	Name	Signal
2010	B1	External Start	IN
2011	A1	-	IN
2012	B2	Call Master Job	IN
2013	A2	Alarm/Error Reset	IN
2014	B3	Select Remote Mode	IN
2015	A3	Select Play Mode	IN
2016	B4	Select Teach Mode	IN
2017	A4	IN192	IN
2020	B5	Interference1 Entrance Prohibited	IN
2021	A5	Interference2 Entrance Prohibited	IN
2022	B6	-	IN
2023	A6	-	IN
	B7	024VU	
	A7	024VU	
3010	B8	Running	OUT
3011	A8	Servo is ON	OUT
3012	B9	Top of Master Job	OUT
3013	A9	Alarm/Error Occurred	OUT
3014	B10	Battery Alarm	OUT
3015	A10	Remote Mode Selected	OUT
3016	B11	Play Mode Selected	OUT
3017	A11	Teach Mode Selected	OUT
3020	B12	In Cube 1	OUT
3021	A12	In Cube 2	OUT
3022	B13	Operation Origin Point	OUT
3023	A13	Intermediate Start OK (continuousing Sequence)	OUT
	B14		
	A14		
	B15		
	A15		
	B16	024VU	
	A16	024VU	
	B17	024VU	
	A17	024VU	
	B18	+24VU	
	A18	+24VU	
	B19	+24VU	
	A19	+24VU	
	B20	FG	
	A20		

Connector	Terminal
B1	2
A1	1
B2	4
A2	3
B3	6
A3	5
B4	8
A4	7
B5	10
A5	9
B6	12
A6	11
B7	14
A7	13
B8	16
A8	15
B9	18
A9	17
B10	20
A10	19
B11	22
A11	21
B12	24
A12	23
B13	26
A13	25
B14	28
A14	27
B15	30
A15	29
B16	32
A16	31
B17	34
A17	33
B18	36
A18	35
B19	38
A19	37
B20	40
A20	39

* Remove Jumper-pin between CN26-9 and -7, CN26-10 and -8 when a external power supply is used.

JANCD-XIO02 (CN12 Connector) I/O Allocation and Connection Diagram

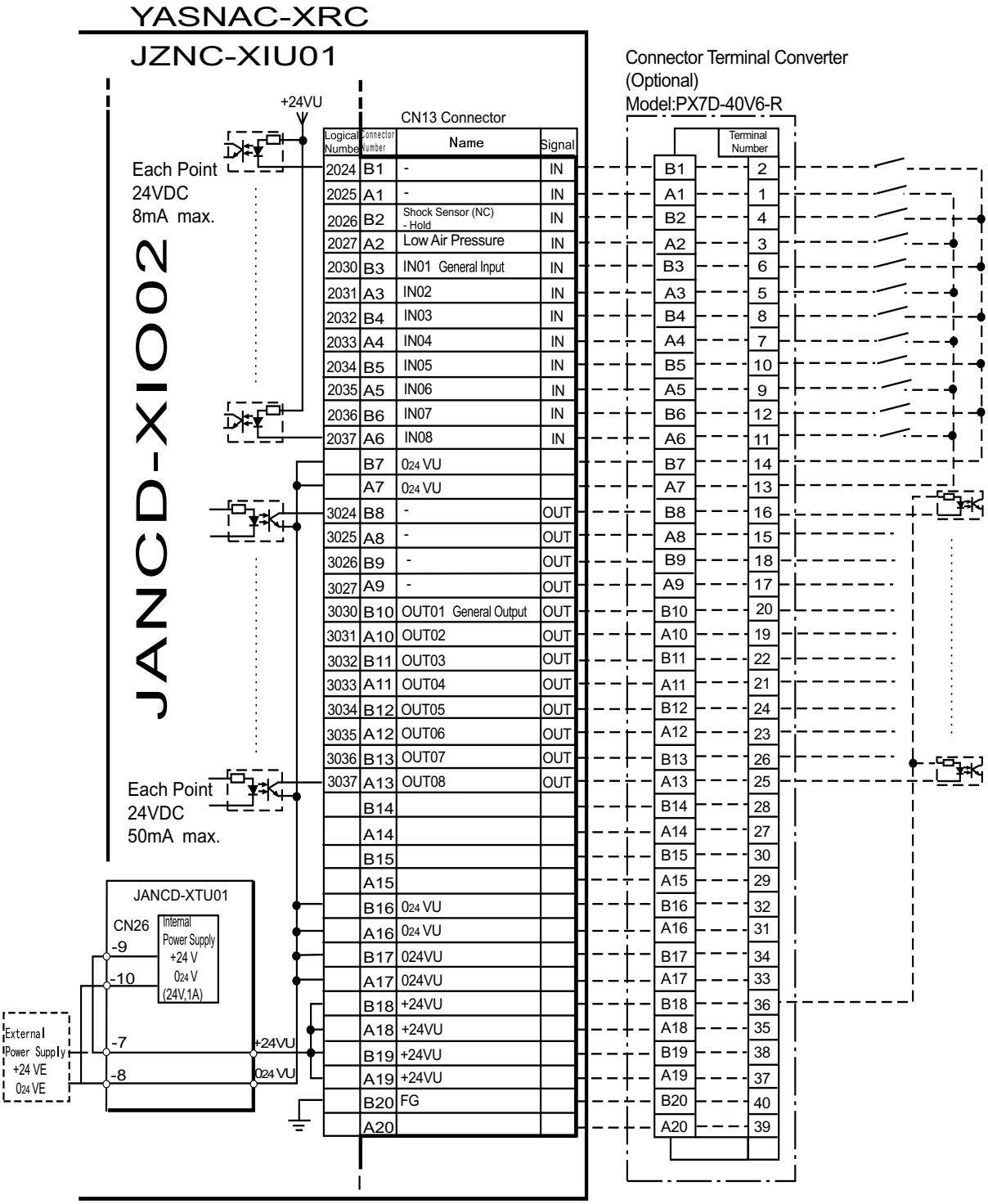

* Remove Jumper-pin between CN26-9 and -7, CN26-10 and -8 when a external power supply is used.

JANCD-XIO02 (CN13 Connector) I/O Allocation and Connection Diagram

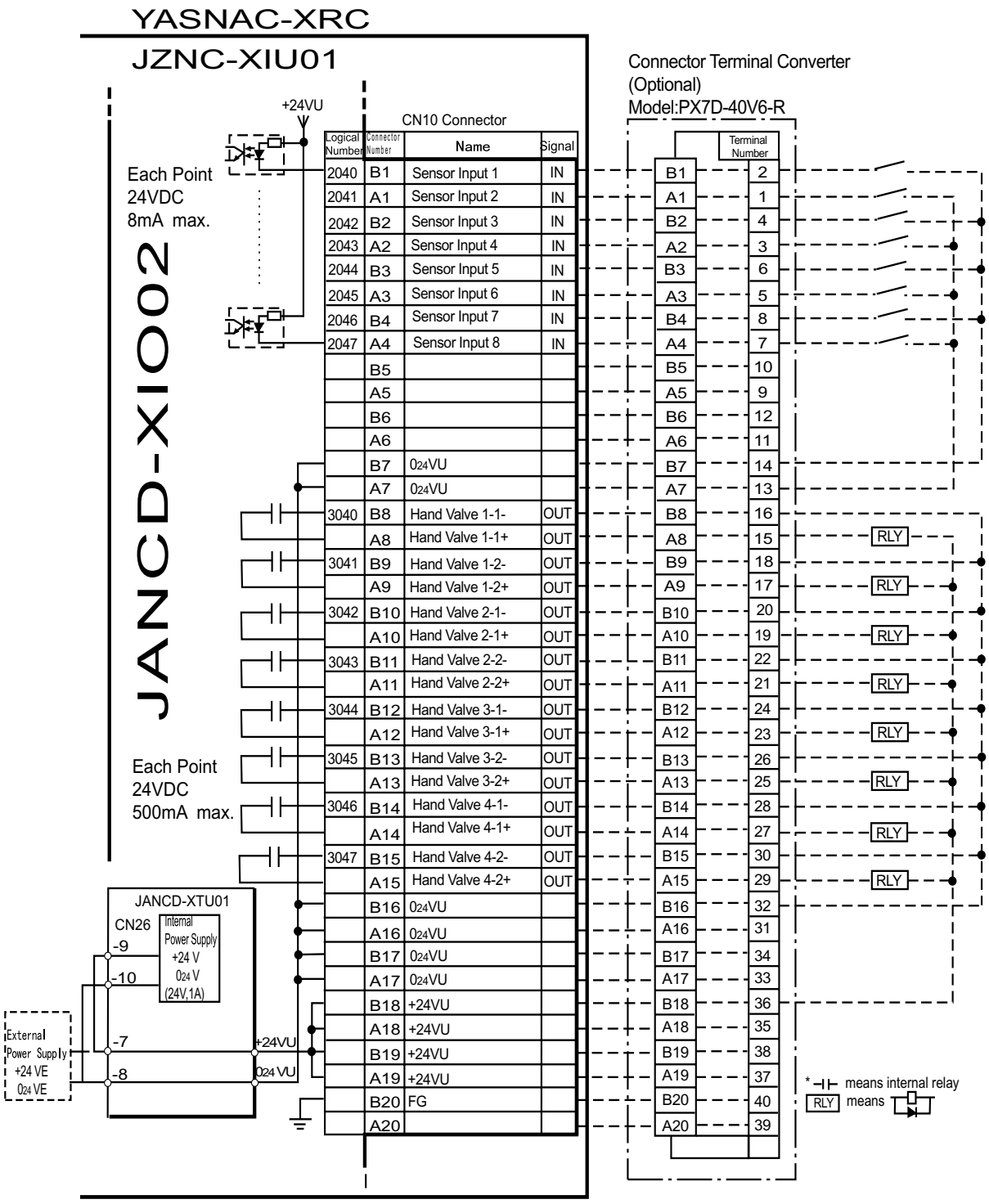

* Remove Jumper-pin between CN26-9 and -7, CN26-10 and -8 when a external power supply is used.

JANCD-XIO02 (CN10 Connector) I/O Allocation and Connection Diagram

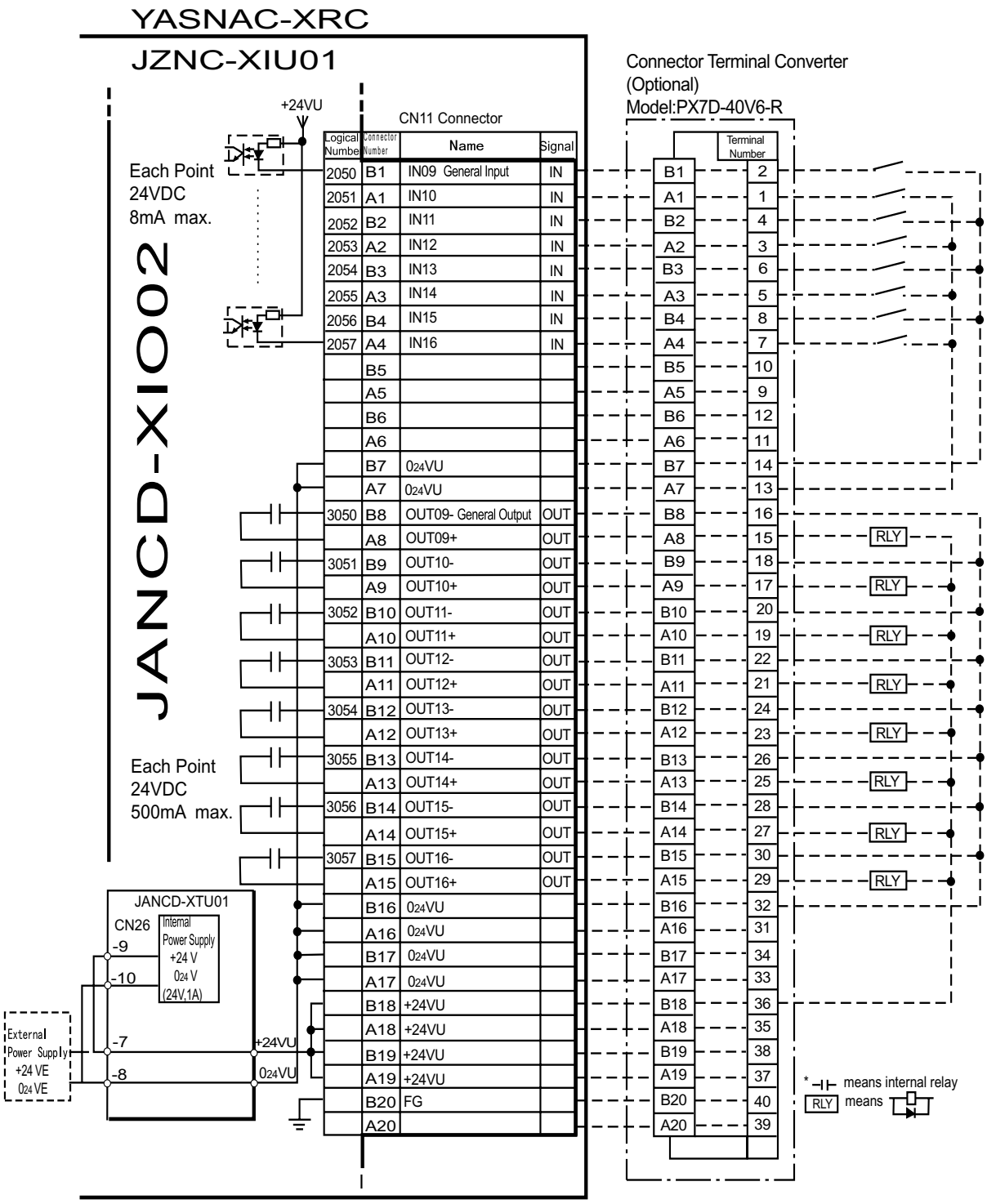

* Remove Jumper-pin between CN26-9 and -7, CN26-10 and -8 when a external power supply is used.

JANCD-XIO02 (CN11 Connector) I/O Allocation and Connection Diagram

Specific Input List XIU01 (Handling)

Logical Number	Input Name / Function	Logical Number	Input Name / Function
2010	EXTERNAL START Functions the same as the [START] button in the playback panel. Only the rising edge of the signal is valid. It starts robot operation (playback). This signal is invalid if external start is prohibited from the playback condition display.	2020	INTERFERENCE 1 ENTRANCE PROHIBITED If the manipulator attempts to enter the cub 1*2 area while this signal is ON, the manipulator goes to wait status (with servo power ON). During wait status, the manipulator operation restarts if this signal turns OFF.
2012	CALL MASTER JOB Only the rising edge of the signal is valid. It calls up the top of the robot program, that is the top of the master job *1. This signal is invalid during playback, during teach-lock and when play master or call is prohibited (set from the playback operation condition display).	2021	INTERFERENCE 2 ENTRANCE PROHIBITED If the manipulator attempts to enter the cub 2*2 area while this signal is ON, the manipulator goes to wait status (with servo power ON). During wait status, the manipulator operation restarts if this signal turns OFF.
2013	ALARM/ERROR RESET After an alarm or error has occurred and the cause been corrected, this signal resets the alarm or error.	2026	SHOCK SENSOR This is normally ON (NC) signal input. When it turns OFF, an XRC displays message "HAND SHOCK SENSOR OPERATING" and a HOL is applied. The releasing in TEACH mode is done on the handling application diagnostic display. Set hand shock sensor function “NOT USE” on the handling applications diagnostic display if this signal is not be used.
2014	SELECT REMOTE MODE Functions the same as [REMOTE] on the playback panel. Valid only while the signal is ON. It selects the REMOTE mode.	2027	LOW AIR PRESSURE This signal is normally OFF (NO). When it turns ON, XRC displays user alarm in the PLAY mode or displays user message in the TEACH mode.
2015	SELECT PLAY MODE Functions the same as [MODE] on the playback panel. Only the rising edge of the signal is valid. It selects the PLAY mode. If designated simultaneously with other modes, the TEACH mode takes priority. This signal is invalid if external mode selection is prohibited from the operation condition display.	2040 to 2047	SENSOR INPUT 1 - 8 Inputs 1 to 8 are monitored with the HSEN handling specific instructions. Sensor inputs 1 to 8 correspond to HSEN 1 to 8.
2016	SELECT TEACH MODE The TEACH mode is selected if this signal turns ON during PLAY mode. Switching to other modes is disabled while this signal is ON. If this signal turns ON while the SELECT PLAY MODE signal is ON, this signal takes priority and the TEACH mode is selected.		

***1** A master job is a job (program) which can be called by CALL MASTER JOB.
Other functions are the same as for normal jobs. Normally, the parent job, which manages the child jobs called up immediately after the power is turned ON, is set as the master job.

***2** See " 3.7 Interference Area ".

Specific Output List XIU01 (Handling)

Logical Number	Output Name / Function	Logical Number	Output Name / Function
3010	RUNNING This signal signifies that the job is running. (Signifies that the job is running, system status is waiting reserved start, or test run is running.) This signal status is the same status as [START] in the playback panel.	3021	IN CUBE 2 This signal turns ON when the current tool center point lies inside a pre-defined space (Cube 2). Use this signal to prevent interference with other manipulators and jigs.
3011	SERVO IS ON This signal signifies that the servo power is turned ON, internal processing such as current position creation is complete, and the system is able to receive the START command. This signal turns OFF when the servo power supply turns OFF. It can be used for XRC status diagnosis for an external start.	3022	OPERATION ORIGIN POINT (IN CUBE 24)*1 This signal turns ON when the current tool center point lies inside a the operation origin area. Use this signal to evaluate whether the robot is in the start position.
3012	TOP OF MASTER JOB This signal signifies that the execution position is the top of the master job. This signal can be used to confirm that the master job has been called.*2	3023	INTERMEDIATE START OK This signal turns ON when the manipulator operates. It turns OFF when the currently executed line is moved with the cursor or when editing operation is carried out after HOLD is applied during operation. Therefore, this signal can be used as a restart interlock after a HOL is applied. However, it also turns ON in the TEACH mode and TEACH MODE SELECTED signal must be referred together.
3013	ALARM/ERROR OCCURRED This signal signifies that an alarm or an error occurred. If a major error occurs, this signal remains ON until the main power is turned OFF.	3040 to 3047	HAND VALVE 1-4 These outputs are controlled by the HAND handling specific instructions. Hand valves 1 to 4 correspond to HAND 1 to 4.
3014	BATTERY ALAR This signal turns ON to notify that the battery requires replacing when the voltage drops from the battery for backup memory of the encoder. Major problems may result if memory data is lost because of an expired battery. It is recommended to avoid these problems by using this signal as a warning signal.		
3015 t 3017	REMOTE/PLAY/TEACH MODE SELECTED This signal notifies the current mode setting. These signals are synchronized with the lamps [REMOTE] and [MODE] in the playback panel. The signal corresponding to the selected mode turns ON.		
3020	IN CUBE 1 This signal turns ON when the current tool center point lies inside a pre-defined space (Cube 1). Use this signal to prevent interference with other manipulators and jigs.		

***1** The operation origin cube and Cube 24 are same.

***2** This signal is not output during operation.

7.5.3 General Application

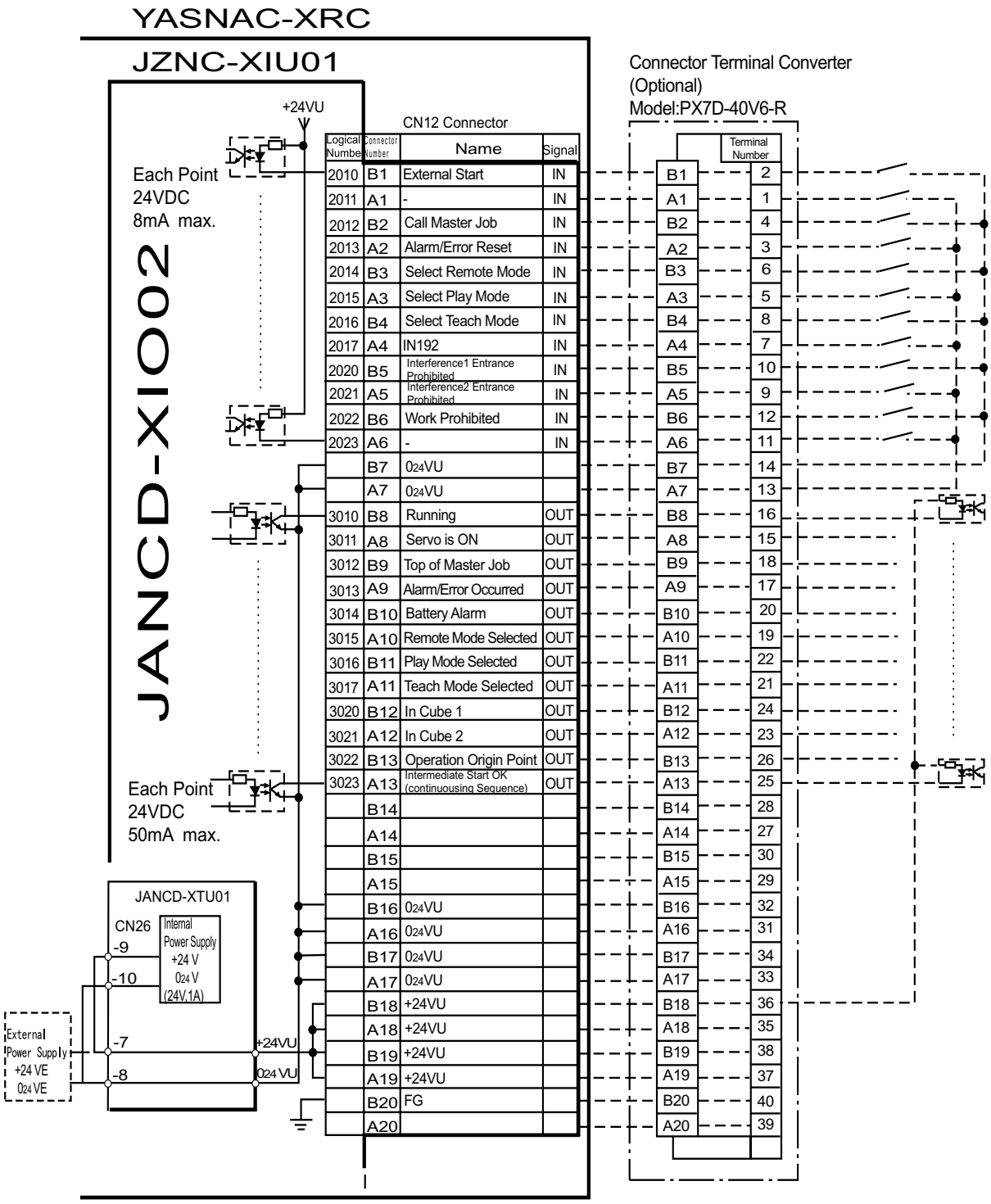

* Remove Jumper-pin between CN26-9 and -7, CN26-10 and -8 when a external power supply is used.

JANCD-XIO02 (CN12 Connector) I/O Allocation and Connection Diagram

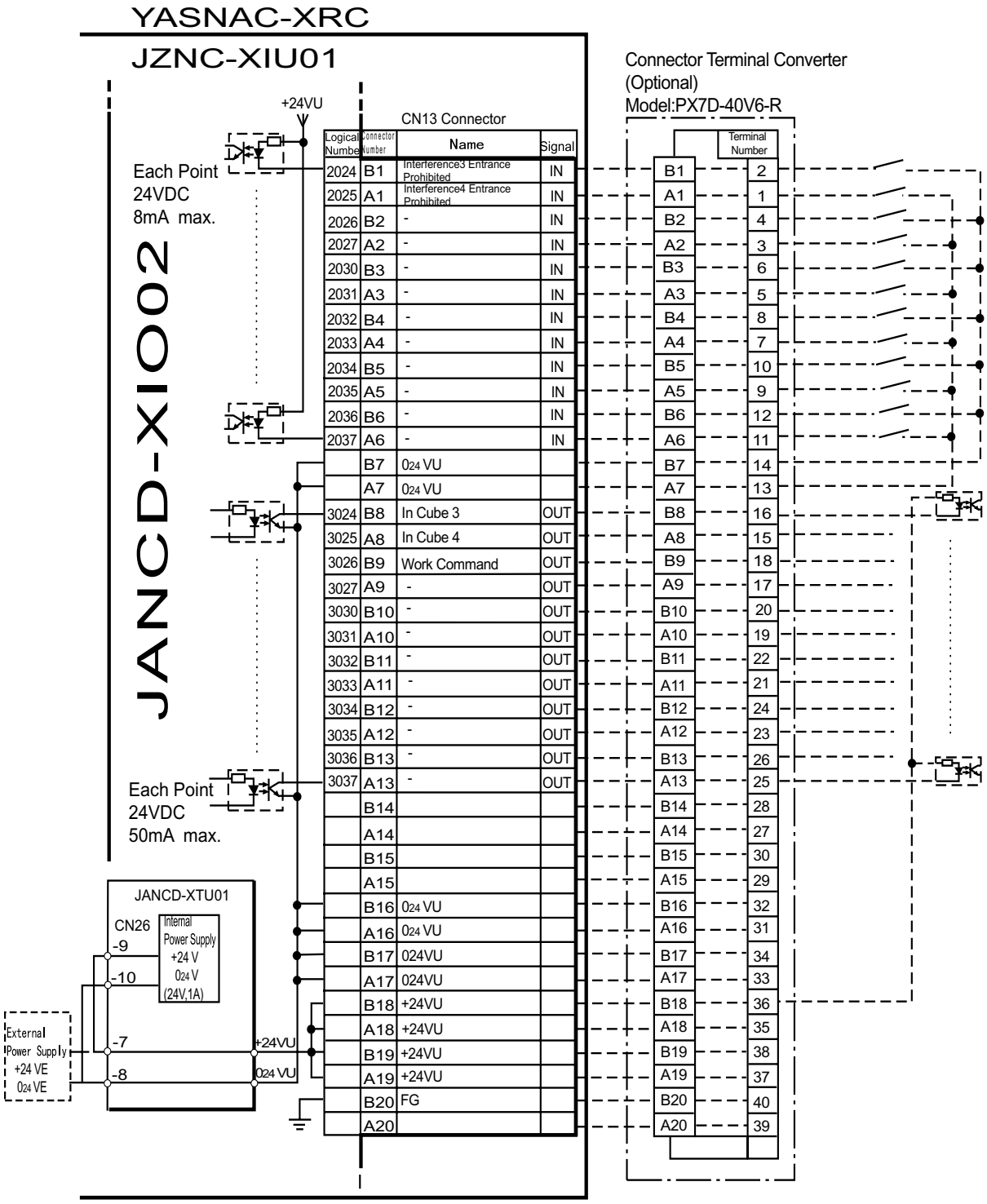

* Remove Jumper-pin between CN26-9 and -7, CN26-10 and -8 when a external power supply is used.

JANCD-XIO02 (CN13 Connector) I/O Allocation and Connection Diagram

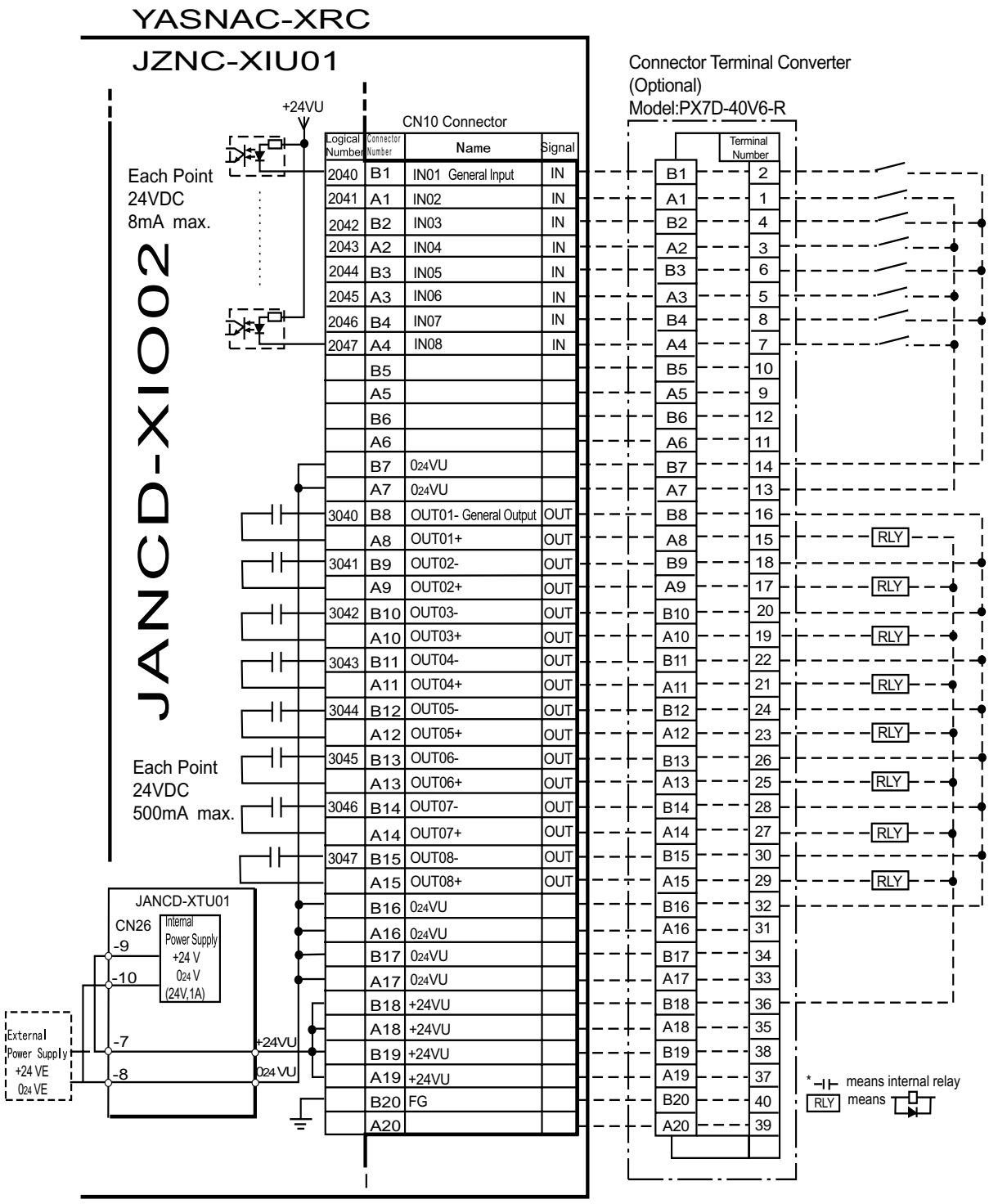

* Remove Jumper-pin between CN26-9 and -7, CN26-10 and -8 when a external power supply is used.

JANCD-XIO02 (CN10 Connector) I/O Allocation and Connection Diagram

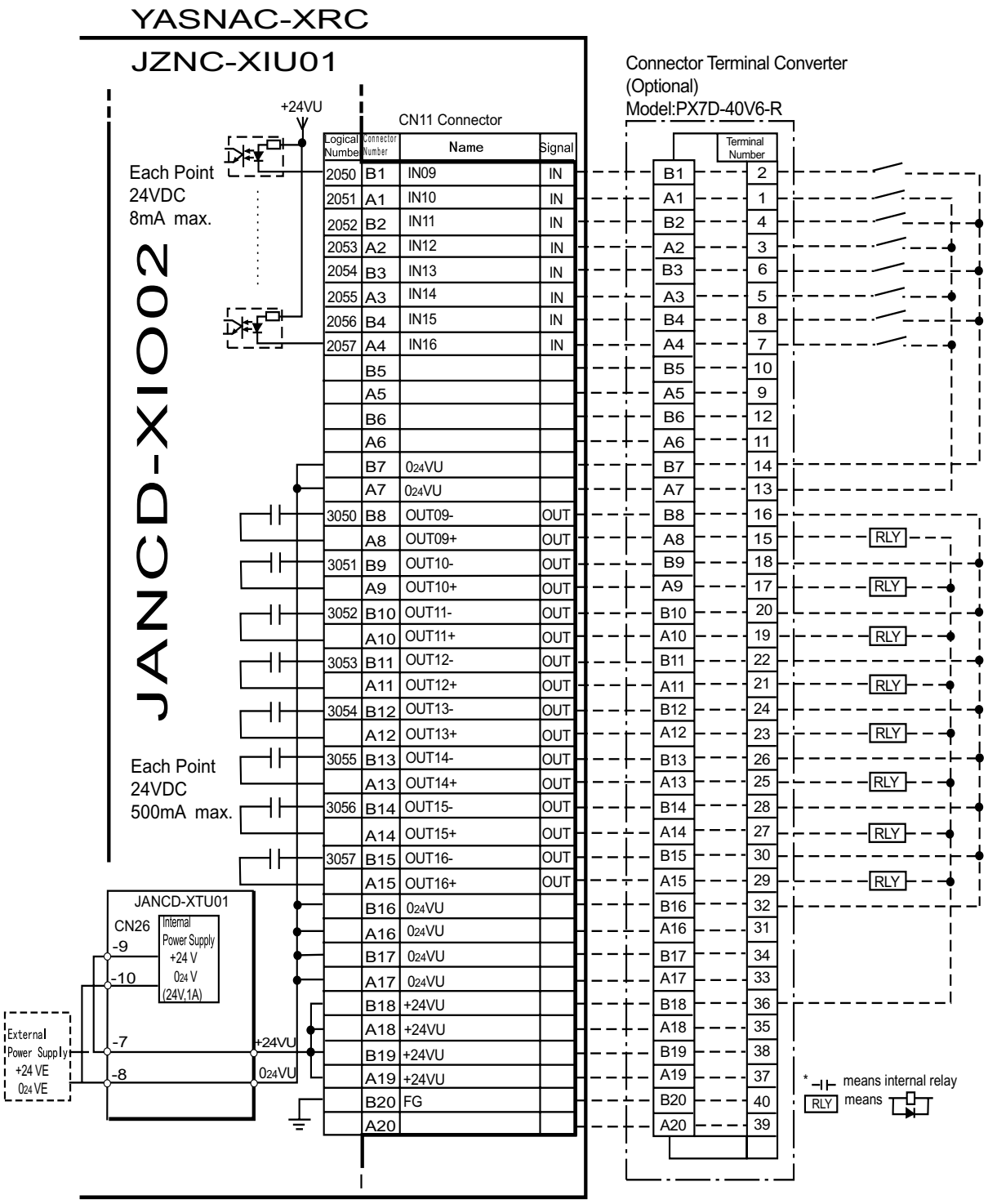

* Remove Jumper-pin between CN26-9 and -7, CN26-10 and -8 when a external power supply is used.

JANCD-XIO02 (CN11 Connector) I/O Allocation and Connection Diagram

Specific Input List XIU01 (General application)

Logical Number	Input Name / Function	Logical Number	Input Name / Function
2010	EXTERNAL START Functions the same as the [START] button in the playback panel. Only the rising edge of the signal is valid. It starts robot operation (playback). This signal is invalid if external start is prohibited from the playback condition display.	2020	INTERFERENCE 1 ENTRANCE PROHIBITED If the manipulator attempts to enter the cub 1*2 area while this signal is ON, the manipulator goes to wait status (with servo power ON). During wait status, the manipulator operation restarts if this signal turns OFF.
2012	CALL MASTER JOB Only the rising edge of the signal is valid. It calls up the top of the robot program, that is the top of the master job *1. This signal is invalid during playback, during teach-lock and when play master or call is prohibited (set from the playback operation condition display).	2021	INTERFERENCE 2 ENTRANCE PROHIBITED If the manipulator attempts to enter the cub 2*2 area while this signal is ON, the manipulator goes to wait status (with servo power ON). During wait status, the manipulator operation restarts if this signal turns OFF.
2013	ALARM/ERROR RESET After an alarm or error has occurred and the cause been corrected, this signal resets the alarm or error.	2022	WORK PROHIBITED (Tool ON Prohibited) Even if TOOLON instruction is executed, XRC doesn't output to external while this signal is ON.
2014	SELECT REMOTE MODE Functions the same as [REMOTE] on the playback panel. Valid only while the signal is ON. It selects the REMOTE mode.	2024	INTERFERENCE 3 ENTRANCE PROHIBITED If the manipulator attempts to enter the cub 3*2 area while this signal is ON, the manipulator goes to wait status (with servo power ON). During wait status, the manipulator operation restarts if this signal turns OFF.
2015	SELECT PLAY MODE Functions the same as [MODE] on the playback panel. Only the rising edge of the signal is valid. It selects the PLAY mode. If designated simultaneously with other modes, the TEACH mode takes priority. This signal is invalid if external mode selection is prohibited from the operation condition display.	2025	INTERFERENCE 4 ENTRANCE PROHIBITED If the manipulator attempts to enter the cub 4*2 area while this signal is ON, the manipulator goes to wait status (with servo power ON). During wait status, the manipulator operation restarts if this signal turns OFF.
2016	SELECT TEACH MODE The TEACH mode is selected if this signal turns ON during PLAY mode. Switching to other modes is disabled while this signal is ON. If this signal turns ON while the SELECT PLAY MODE signal is ON, this signal takes priority and the TEACH mode is selected.		

***1** A master job is a job (program) which can be called by CALL MASTER JOB.
Other functions are the same as for normal jobs. Normally, the parent job, which manages the child jobs called up immediately after the power is turned ON, is set as the master job.

***2** See " 3.7 Interference Area ".

Specific Output List XIU01 (General application)

Logical Number	Output Name / Function	Logical Number	Output Name / Function
3010	RUNNING This signal signifies that the job is running. (Signifies that the job is running, system status is waiting reserved start, or test run is running.) This signal status is the same status as [START] in the playback panel.	3021	IN CUBE 2 This signal turns ON when the current tool center point lies inside a pre-defined space (Cube 2). Use this signal to prevent interference with other manipulators and jigs.
3011	SERVO IS ON This signal signifies that the servo power is turned ON, internal processing such as current position creation is complete, and the system is able to receive the START command. This signal turns OFF when the servo power supply turns OFF. It can be used for XRC status diagnosis for an external start.	3022	OPERATION ORIGIN POINT (IN CUBE 24)*1 This signal turns ON when the current tool center point lies inside a the operation origin area. Use this signal to evaluate whether the robot is in the start position.
3012	TOP OF MASTER JOB This signal signifies that the execution position is the top of the master job. This signal can be used to confirm that the master job has been called.*2	3023	INTERMEDIATE START OK This signal turns ON when the manipulator operates. It turns OFF when the currently executed line is moved with the cursor or when editing operation is carried out after HOLD is applied during operation. Therefore, this signal can be used as a restart interlock after a HOL is applied. However, it also turns ON in the TEACH mode and TEACH MODE SELECTED signal must be referred together.
3013	ALARM/ERROR OCCURRED This signal signifies that an alarm or an error occurred. If a major error occurs, this signal remains ON until the main power is turned OFF.	3024	IN CUBE 3 This signal turns ON when the current tool center point lies inside a pre-defined space (Cube 3). Use this signal to prevent interference with other manipulators and jigs.
3014	BATTERY ALAR This signal turns ON to notify that the battery requires replacing when the voltage drops from the battery for backup memory of the encoder. Major problems may result if memory data is lost because of an expired battery. It is recommended to avoid these problems by using this signal as a warning signal.	3025	IN CUBE 4 This signal turns ON when the current tool center point lies inside a pre-defined space (Cube 4). Use this signal to prevent interference with other manipulators and jigs.
3015 t 3017	REMOTE/PLAY/TEACH MODE SELECTED This signal notifies the current mode setting. These signals are synchronized with the lamps [REMOTE] and [MODE] in the playback panel. The signal corresponding to the selected mode turns ON.	3026	WORK COMMAND This signal provides the command for the general tool to operate. TOOL ON instruction execution or the [TOOL ON] key in the programming pendant turns this signal O and TOOL OFF instruction execution or the [TOOL OFF] key in the programming pendant turns it OFF. However, it remains OFF while the WORK PROHIBITED signal (2022) is input or while the robot is stopped.
3020	IN CUBE 1 This signal turns ON when the current tool center point lies inside a pre-defined space (Cube 1). Use this signal to prevent interference with other manipulators and jigs.		

***1** The operation origin cube and Cube 24 are same.

***2** This signal is not output during operation.

7.5.4 Spot Welding

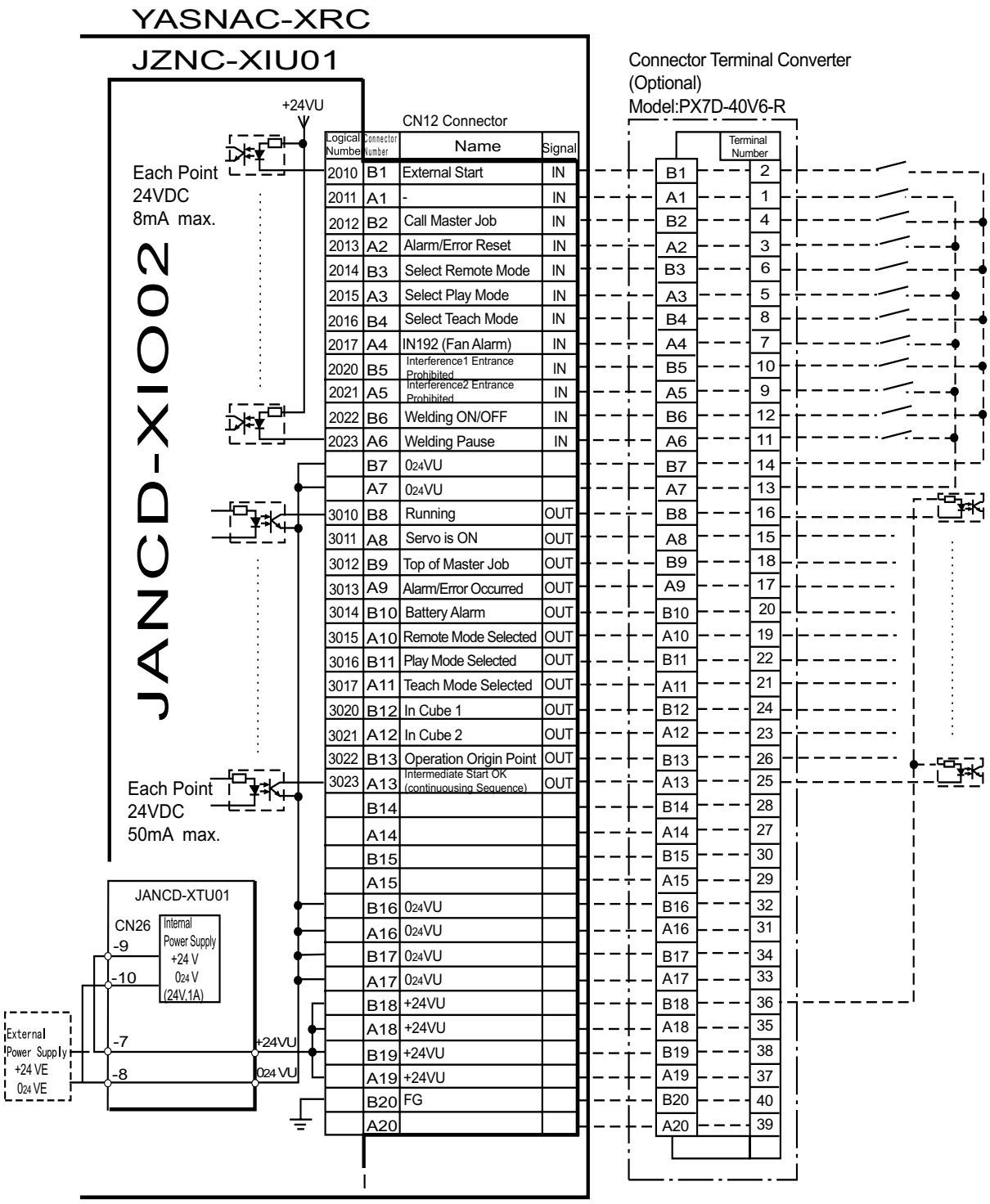

* Remove Jumper-pin between CN26-9 and -7, CN26-10 and -8 when a external power supply is used.

JANCD-XIO02 (CN12 Connector) I/O Allocation and Connection Diagram

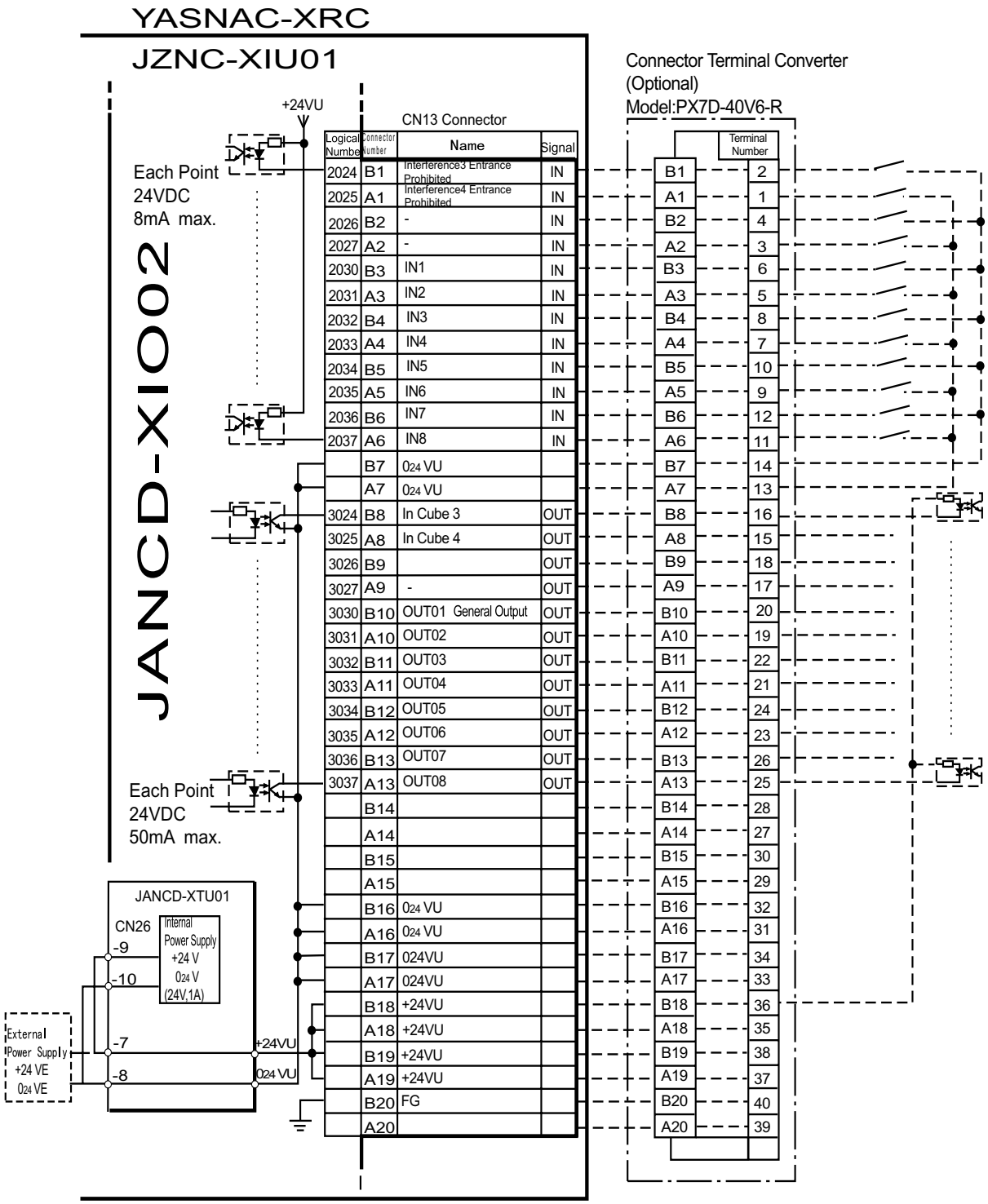

* Remove Jumper-pin between CN26-9 and -7, CN26-10 and -8 when a external power supply is used.

JANCD-XIO02 (CN13 Connector) I/O Allocation and Connection Diagram

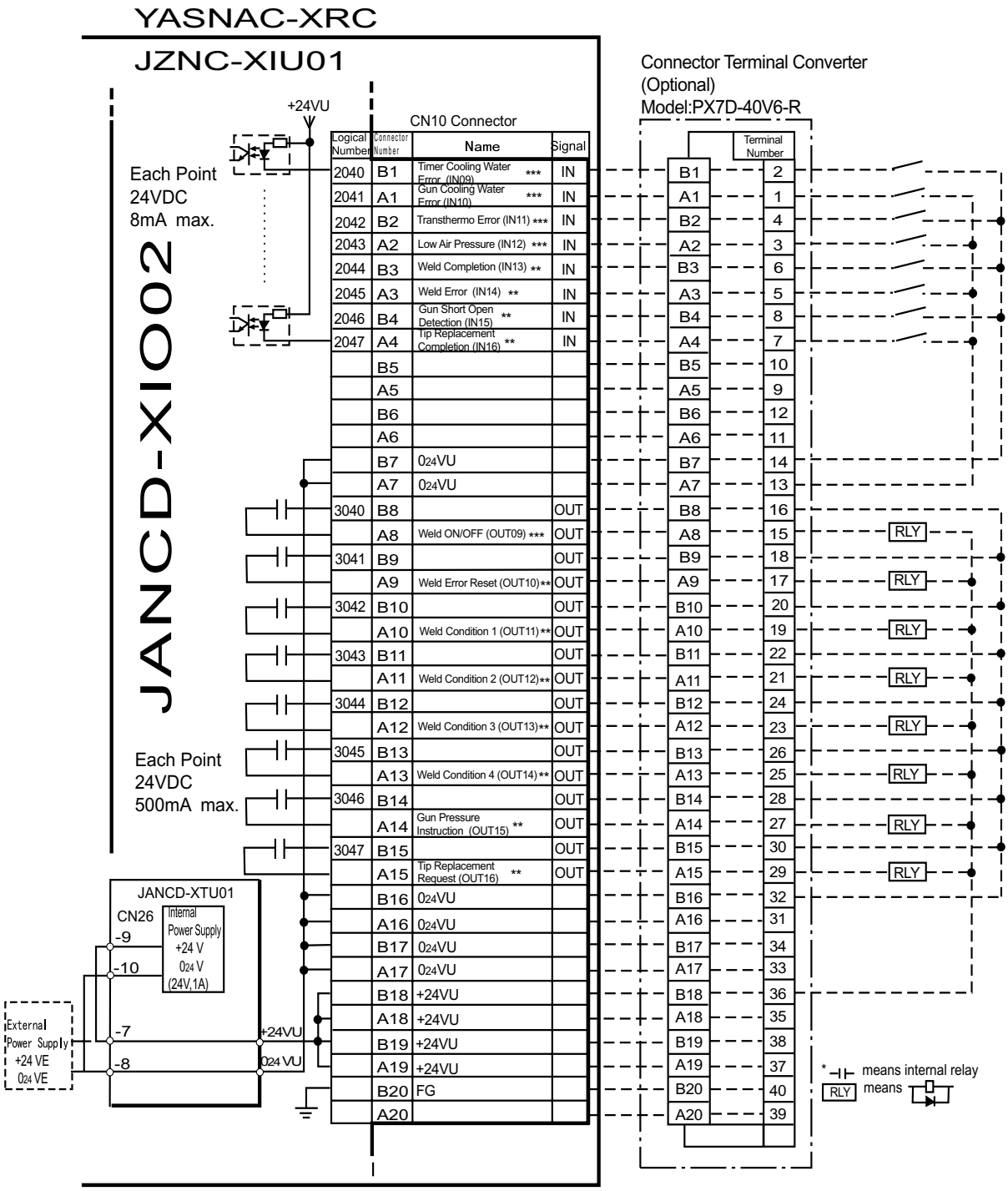

* Remove Jumper-pin between CN26-9 and -7, CN26-10 and -8 when a external power supply is used.

** This assignment can be changed at the I/O assignment display. Refer to Specific Input List XIU01 and Specific Input List XIU01 for detail.

*** This assignment can be changed at the PSEDU input display. Refer to Specific Input List XIU01 and Specific Input List XIU01 for detail.

JANCD-XIO02 (CN10 Connector) I/O Allocation and Connection Diagram

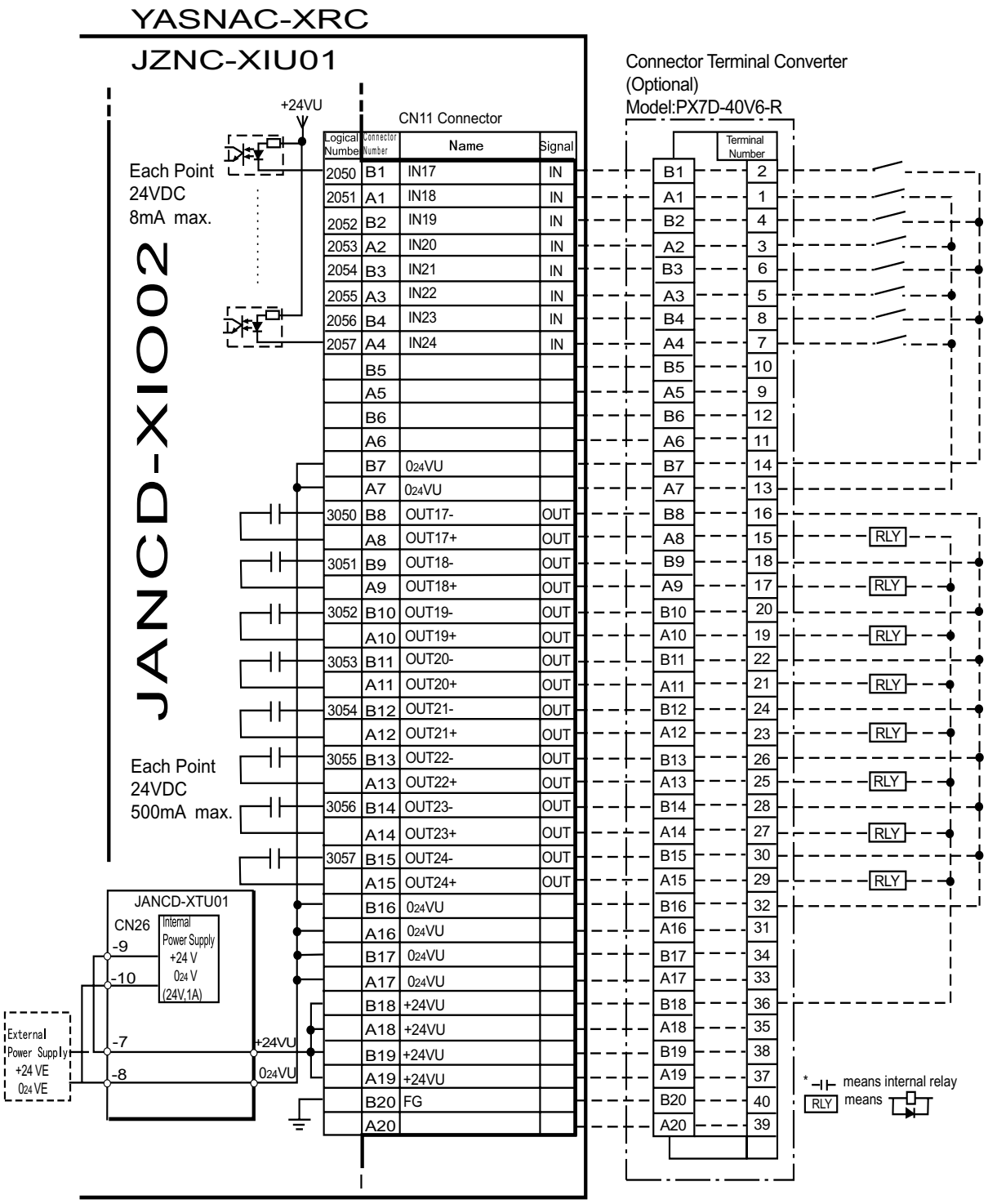

Logical Number	Connector Number	Name	Signal	Terminal Number
2050	B1	IN17	IN	2
2051	A1	IN18	IN	1
2052	B2	IN19	IN	4
2053	A2	IN20	IN	3
2054	B3	IN21	IN	6
2055	A3	IN22	IN	5
2056	B4	IN23	IN	8
2057	A4	IN24	IN	7
	B5			10
	A5			9
	B6			12
	A6			11
	B7	024VU		14
	A7	024VU		13
3050	B8	OUT17-	OUT	16
	A8	OUT17+	OUT	15
3051	B9	OUT18-	OUT	18
	A9	OUT18+	OUT	17
3052	B10	OUT19-	OUT	20
	A10	OUT19+	OUT	19
3053	B11	OUT20-	OUT	22
	A11	OUT20+	OUT	21
3054	B12	OUT21-	OUT	24
	A12	OUT21+	OUT	23
3055	B13	OUT22-	OUT	26
	A13	OUT22+	OUT	25
3056	B14	OUT23-	OUT	28
	A14	OUT23+	OUT	27
3057	B15	OUT24-	OUT	30
	A15	OUT24+	OUT	29
	B16	024VU		32
	A16	024VU		31
	B17	024VU		34
	A17	024VU		33
	B18	+24VU		36
	A18	+24VU		35
	B19	+24VU		38
	A19	+24VU		37
	B20	FG		40
	A20			39

* Remove Jumper-pin between CN26-9 and -7, CN26-10 and -8 when a external power supply is used.

JANCD-XIO02 (CN11 Connector) I/O Allocation and Connection Diagram

Specific Input List XIU01 (Spot Welding)

Logical Number	Input Name / Function	Logical Number	Input Name / Function
2010	EXTERNAL START Functions the same as the [START] button in the playback panel. Only the rising edge of the signal is valid. It starts robot operation (playback). This signal is invalid if external start is prohibited from the playback condition display.	2022	WELDING ON/OFF (From sequencer) This signal inputs the welding ON/OFF selector switch status from the sequencer in the interlock unit. The WELD ON/OFF signal is output to the welder according to this signal and the manipulator status. Welding is not executed when this signal is input (ON).
2012	CALL MASTER JOB Only the rising edge of the signal is valid. It calls up the top of the robot program, that is the top of the master job *1. This signal is invalid during playback, during teach-lock and when play master or call is prohibited (set from the playback operation condition display).	2023	WELDING PAUSE (From sequencer This signal is used to move the manipulator t the origin point when an error occurs in the welder or the gun. The robot neglects the spot welding instruction and operates playback motion.
2013	ALARM/ERROR RESET After an alarm or error has occurred and the cause been corrected, this signal resets the alarm or error.	2024	INTERFERENCE 3 ENTRANCE PROHIBITED If the manipulator attempts to enter the cub 3*2 area while this signal is ON, the manipulator goes to wait status (with servo power ON). During wait status, the manipulator operation restarts if this signal turnsOFF.
2014	SELECT REMOTE MODE Functions the same as [REMOTE] on the playback panel. Valid only while the signal is ON. It selects the REMOTE mode.	2025	INTERFERENCE 4 ENTRANCE PROHIBITED If the manipulator attempts to enter the cub 4*2 area while this signal is ON, the manipulator goes to wait status (with servo power ON). During wait status, the manipulator operation restarts if this signal turnsOFF.
2015	SELECT PLAY MODE Functions the same as [MODE] on the playback panel. Only the rising edge of the signal is valid. It selects the PLAY mode. If designated simultaneously with other modes, the TEACH mode takes priority. This signal is invalid if external mode selection is prohibited from the operation condition display.	2040 *4	TIMER COOLING WATER ERROR This signal monitors the status of timer cooling water. The manipulator displays alarm and stops when this signal is input. The servo power remains ON.
2016	SELECT TEACH MODE The TEACH mode is selected if this signal turns ON during PLAY mode. Switching to other modes is disabled while this signal is ON. If this signal turns ON while the SELECT PLAY MODE signal is ON, this signal takes priority and the TEACH mode is selected.	2041 *4	GUN COOLING WATER ERROR This signal monitors the status of gun cooling water. The manipulator displays alarm and stops when this signal is input. The servo power supply remains ON.
2020	INTERFERENCE 1 ENTRANCE PROHIBITED If the manipulator attempts to enter the cube 1*2 area while this signal is ON, the manipulator goes to wait status (with servo power ON). During wait status, the manipulator operation restarts if this signal turns OFF.	2042 *4	TRANSTHERMO ERROR Error signal is sent from the transfomer in the gun to the robot. This signal is ON normally (NC) and an alarm occurs when the signal is OFF. The servo power supply remains ON.
2021	INTERFERENCE 2 ENTRANCE PROHIBITED If the manipulator attempts to enter the cube 2*2 area while this signal is ON, the manipulator goes to wait status (with servo power ON). During wait status, the manipulator operation restarts if this signal turns OFF.	2043 *4	LOW AIR PRESSURE When air pressure is reduced and this input is turned ON, an alarm occurs. The servo power supply remains ON.

Specific Input List XIU01 (Spot Welding)

Logical Number	Input Name / Function	Logical Number	Input Name / Function
2044 *3	WELD COMPLETION This signal indicates that the welder completed welding without error. This signal is used as a confirmation signal for welding instruction execution and manual spot welding. After this signal is input, the welding sequence is completed and the next step is executed when confirmation limit switch is not provided.	2046 *3	GUN SHORT OPEN DETECTION This signal is connected with a single gun open verification limit switch or a double stroke gun short open verification limit switch to verify the gun open.
2045 *3	WELDING ERROR This signal indicates an abnormal welding result or welder's error. Alarm occurs and the manipulator stops if this signal is input during welding.	*3	GUN PRESSURE DETECTION This signal indicates that a gun is in pressing status.
*3	STICK DETECTION This signal indicates an abnormal welding result or welder's error. Alarm occurs and the manipulator stops if this signal is input during welding.	2047 *3	TIP REPLACE COMPLETION When this signal is input after tip replacement, the TIP REPLACE REQUEST signal turns OFF, and the stored number of welding is cleared.
*3	GUN FULL OPEN DETECTION This signal indicates that the stroke of the double stroke gun is full open.		

***1** A master job is a job (program) which can be called by CALL MASTER JOB.
Other functions are the same as for normal jobs. Normally, the parent job, which manages the child jobs called up immediately after the power is turned ON, is set as the master job.

***2** See " 3.7 Interference Area ".

***3** This signal can be allocated to any general input signal at the I/O allocation display in operation condition.

***4** This signal can be set as "USE" or "NOT USE" by pseudo input signal "822x". If "NOT USE" is selected, this signal can be used as general input signal.

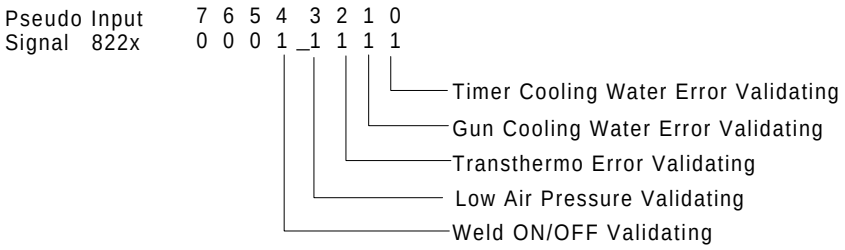

Specific Output List XIU01 (Spot Welding)

Logical Number	Output Name / Function	Logical Number	Output Name / Function
3010	RUNNING This signal signifies that the job is running. (Signifies that the job is running, system status is waiting reserved start, or test run is running.) This signal status is the same status as [START] in the playback panel.	3023	INTERMEDIATE START OK This signal turns ON when the manipulator operates. It turns OFF when the currently executed line is moved with the cursor or when editing operation is carried out after HOLD is applied during operation. Therefore, this signal can be used as a restart interlock after a HOLD is applied. However, it also turns ON in the TEACH mode and TEACH MODE SELECTED signal must be referred together.
3011	SERVO IS ON This signal signifies that the servo power is turned ON, internal processing such as current position creation is complete, and the system is able to receive the START command. This signal turns OFF when the servo power supply turns OFF. It can be used for XRC status diagnosis for an external start.	3024	IN CUBE 3 This signal turns ON when the current tool center point lies inside a pre-defined space (Cube 3). Use this signal to prevent interference with other manipulators and jigs.
3012	TOP OF MASTER JOB This signal signifies that the execution positio is the top of the master job. This signal can be used to confirm that the master job has been called.*2	3025	IN CUBE 4 This signal turns ON when the current tool center point lies inside a pre-defined space (Cube 4). Use this signal to prevent interference with other manipulators and jigs.
3013	ALARM/ERROR OCCURRED This signal signifies that an alarm or an error occurred. If a major error occurs, this signal remains ON until the main power is turned OFF.	3040 *4	WELD ON/OFF Outputs a signal input from the interlock panel, etc.considering the robot status.
3014	BATTERY ALAR This signal turns ON to notify that the battery requires replacing when the voltage drops from the battery for backup memory of the encoder. Major problems may result if memory data is lost because of an expired battery. It is recommended to avoid these problems by using this signal as a warning signal.	3041 *3	WELD ERROR RESET This signal commands the reset error status of the welder. This is operated with the programing pendant operation.
3015 to 3017	REMOTE/PLAY/TEACH MODE SELECTED This signal notifies the current mode setting. These signals are synchronized with the lamps [REMOTE] and [MODE] in the playback panel. The signal corresponding to the selected mode turns ON.	3042 to 3045 *3	WELD CONDITION (Level signals) 1(1), 2(2), 4(3), 8(4), 16(5), 32(6), 64(7), 128(8) Sets the welding conditions for the welder. The output format can be selected as binary or discrete (bit number). It can handle up to 255 conditions. Most-significant bit is the parity bit (when specified).
3020	IN CUBE 1 This signal turns ON when the current tool center point lies inside a pre-defined space (Cub 1). Use this signal to prevent interference with other manipulators and jigs.	*3	WELDING COMMAND This signal outputs execution command signal to the welder. This signal is not necessary for welder which is executed using the WELDING CONDITION signal.
3021	IN CUBE 2 This signal turns ON when the current tool center point lies inside a pre-defined space (Cub 2). Use this signal to prevent interference with other manipulators and jigs.	*3	STROKE CHANGE1 SINGLE SOLENOID DOUBLE SOLENOID This is a signal, when a double stroke gun is used, to change the open stroke of the welding gun.
3022	OPERATION ORIGIN POINT (IN CUBE 24)*1 This signal turns ON when the current tool center point lies inside a the operation origin area. Use this signal to evaluate whether the robot is in the start position.	3046 *3	GUN PRESSURE INSTRUCTION This outputs a gun pressure instruction.
3047 *3	TIP REPLACEMENT REQUEST This is output when the number of strokes reaches the set value for tip replacement.		

***1** The operation origin cube and Cube 24 are same.

***2** This signal is not output during operation.

***3** This signal can be allocated to any general output signal at the I/O allocation display in operation condition.

***4** This signal can be select “USE” or “NOT USE” by pseudo input signal ”822x”. If “NOT USE” is selected, this signal can be used as general input signal.

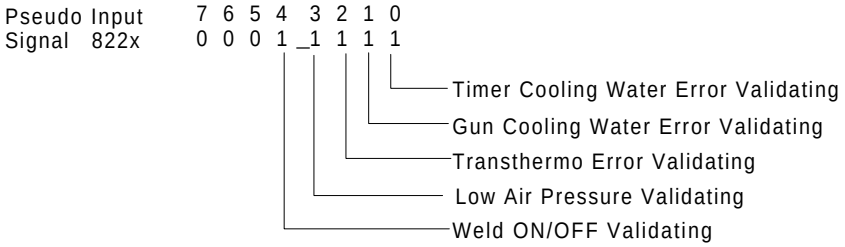

7.5.5 JANCD-XEW01 Circuit Board

■ Arc Welding Application

There are two types of XEW01 circuit board as follows;
XEW01-01: Analog Outputs x 3 ports + Status Signal Input of a Welder
XEW01-02: Analog Outputs x 3 ports only

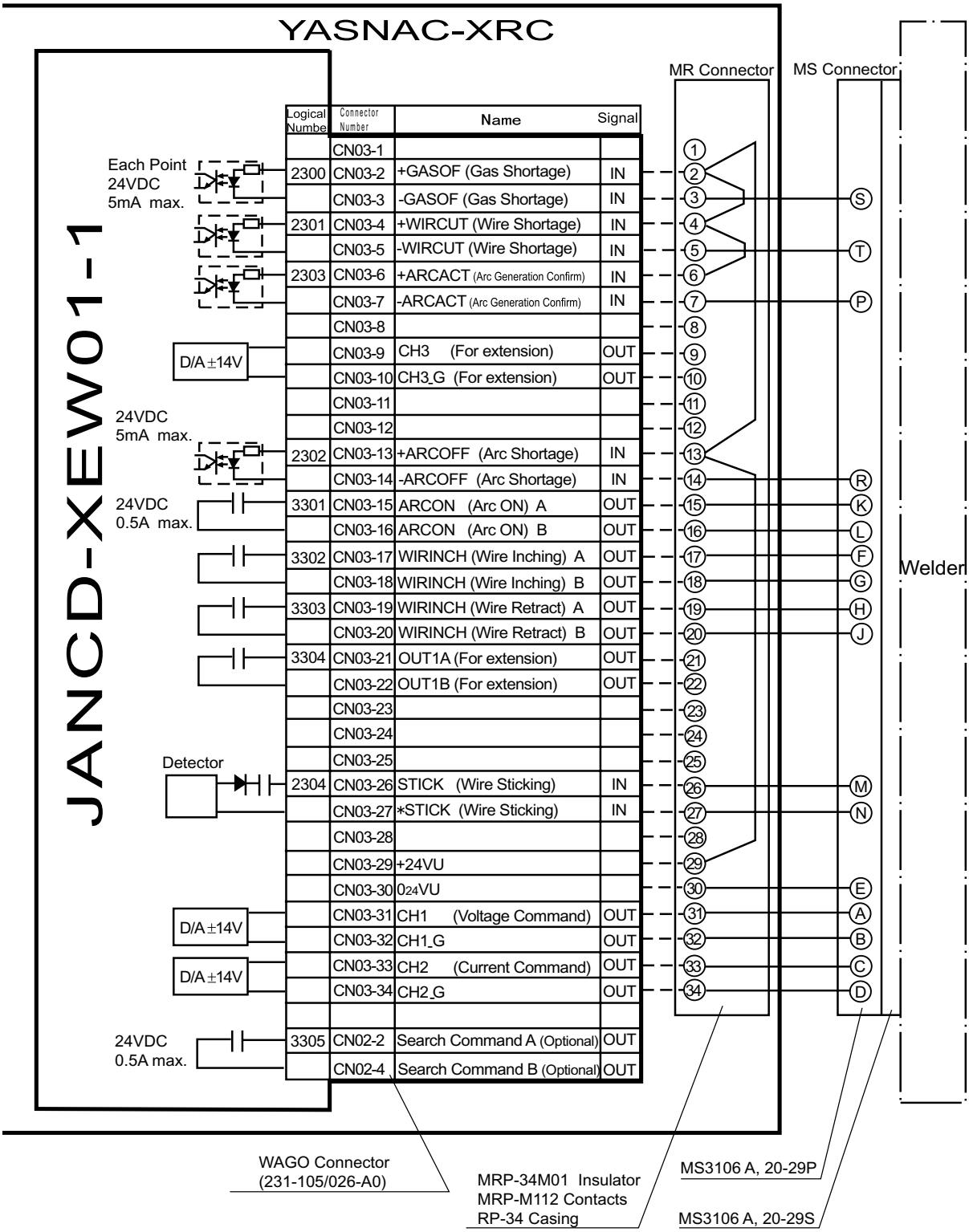

Maintenance

8 Inspections

8.1 Regular Inspections

CAUTION

- Do not touch the cooling fan or other equipment while the power is turned ON.

  Failure to observe this caution may result in electric shock or injury.

Carry out the following inspections.

Inspection Equipment	Inspection Item	Inspection Frequency	Comments
XRC Controller	Check that the doors are completely closed.	Daily	
	Check for gaps or damage to the sealed construction.	Monthly	
Servo ascending fan and backside duct fan	Check operation	As required	While power ON
Heat exchange fan (Inside, Outside) (Large type only)	Check operation	As required	While servo ON
Emergency stop button	Check operation	As required	While servo ON
Deadman switch	Check operation	As required	On teach mode
Battery	Confirm battery alarm or message is displayed or not	As required	

8.2 XRC Inspections

8.2.1 Checking if the Doors are Firmly Closed

- The YASNAC XRC has a fully sealed construction, designed to keep external air containing oil mist out of the XRC.
  Be sure to keep the XRC doors fully closed at all times, even when the controller is not operating.

- Open or close the two locks in each door with the minus driver when opening or closing the doors for maintenance after the main power is turned off. (CW: Open, CCW: Close)
  Make sure push the door closed and turn the door lock with the driver. When the door is closed, turn the door lock until the door clicks.

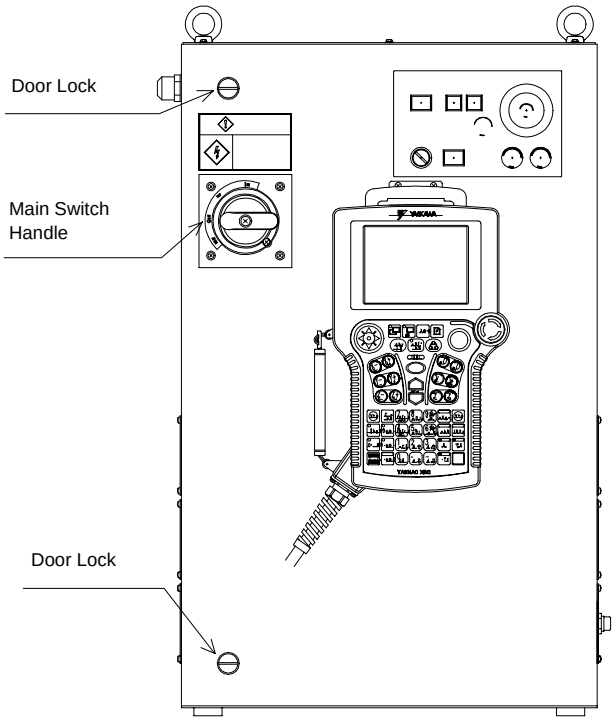

YASNAC XRC Front View

8.2.2 Checking for Gaps or Damage in the Sealed Construction Section

- Open the door and check that the seal around the door is undamaged.
- Check that the inside of the XRC is not excessively dirty. If it is dirty, determine the cause, take measures to correct the problem and immediately clean up the dirt.
- Fully close each door lock and check that no excessive gaps exist around the edge of the door.

8.3 Cooling Fan Inspections

Inspect the cooling fans as required. A defective fan can cause the XRC to malfunction because of excessive high temperatures inside.

The servo ascending fan and backside duct fan normally operate while the power is turned ON. Check if the fans are operating correctly by visual inspection and by feeling air moving into the air inlet and from the outlet.

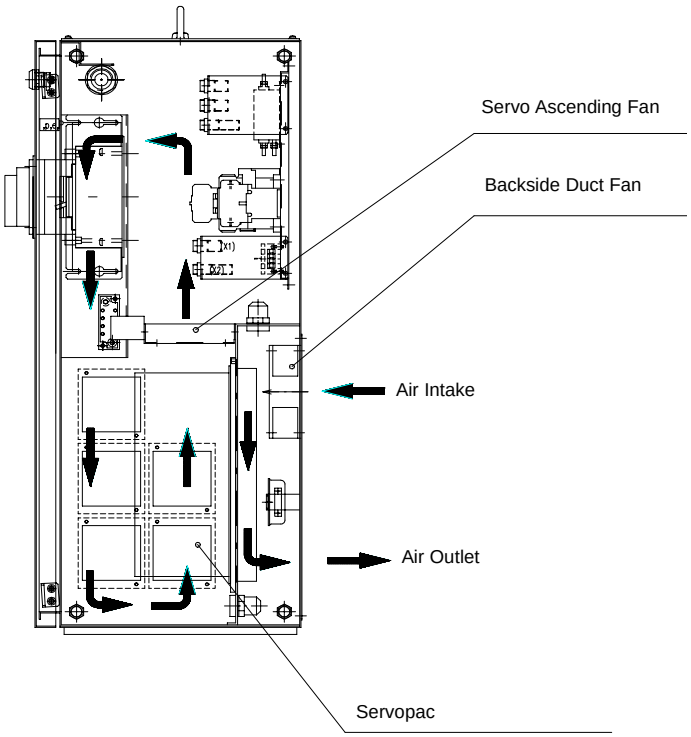

Cooling Fan Construction (Small type)

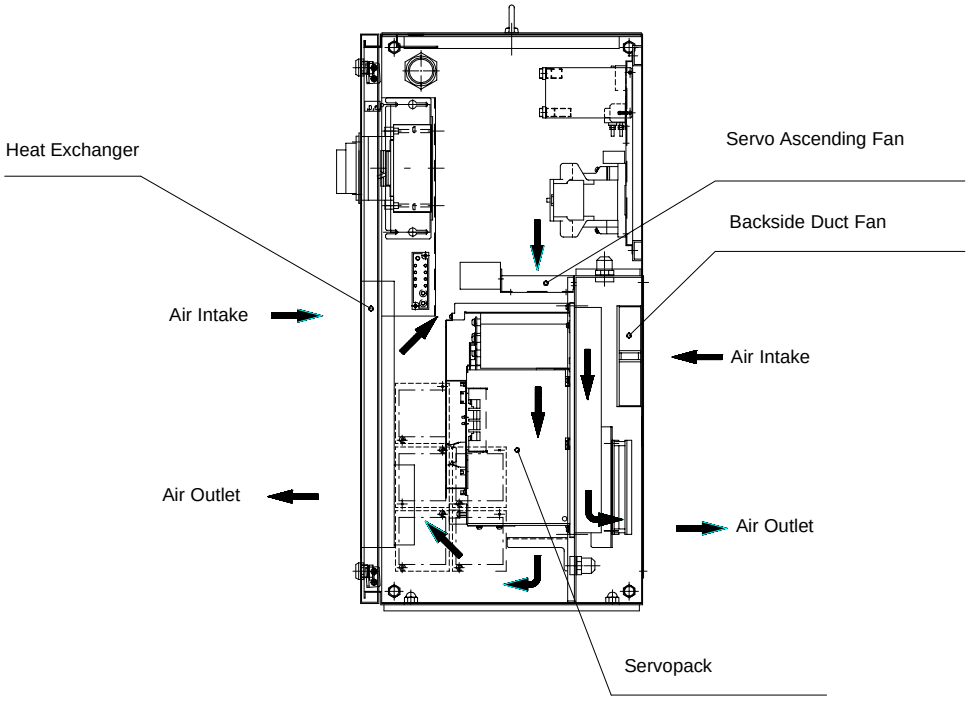

Cooling Fan Construction (Large type)

8.4 Emergency Stop Button Inspections

The emergency stop buttons are located on both the playback panel and the programming pendant. Confirm the servo power is off by pressing the emergency stop button on the playback panel after the servo ON button, before the robot is operated.

8.5 Deadman Switch Inspections

The programing pendant is equipped with a three-position deadman switch. Perform the following operation to confirm the deadman switch operates.

1. Press [TEACH] on the playback panel to switch to teach mode. The [TEACH] lamp lights.

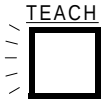

2. Press [SERVO ON READY] on the playback panel. The [SERVO ON READY] lamp blinks.

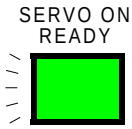

3. Press [TEACH LOCK] on the programming pendant. The [TEACH LOCK] LED blinks.

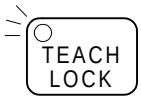

4. When the deadman switch is grasped lightly, the servo power is turned ON.
   When the deadman switch is grasped firmly or released, the servo power is turned OFF.

NOTE

If the [SERVO ON READY] lamp does not light in previous operation (2), check the following:
- The emergency stop button on the playback panel is pressed.
- The emergency stop button on the programming pendant is pressed.
- The emergency stop signal is input from external.

If the servo is not turned on in a previous operation (4), check the following:
- The overrun LS is operating.
- If a major alarm is occurring.

8.6 Battery Inspections

The XRC has a battery that backs up the important program files for user data in the CMOS memory.
A battery alarm indicates when a battery has expired and must be replaced. The programming pendant display and the message "Memory battery weak" appears at the bottom of the display.
The way to replace the battery is described in “9.1.1 Replacing Parts of the CPU Rack”.

8.7 Power Supply Voltage Confirmation

Check the voltage of R, S, T terminal of the circuit breaker (QF1) with an electric tester.

Power Supply Voltage Confirmation

Measuring Items	Terminals	Correct Value
Correlate voltage	Between R and S, S and T, R and T	200 to 220V (+10%, -15%)
Voltage between earth (S phase ground)	Between R and G, T and G	200 to 220V (+10%, -15%)
	Between S and G	About 0V

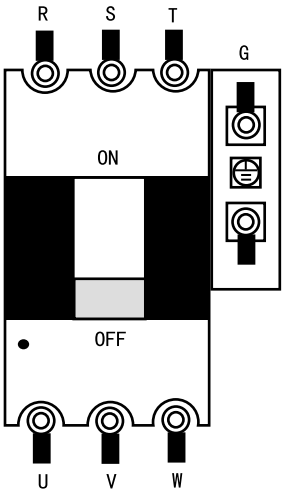

Circuit Breaker (QF1)

8.8 Open Phase Check

Open Phase Check List

Check Item	Contents
Lead Cable Check	Confirm if the lead cable for the power supply is wired as shown in the following. If the wiring is wrong or broken, repair it.
Input Power Supply Check	Check the open phase voltage of input power supply with an electric tester. (Normal value: 200-220V (+10%, -15%))
Circuit Breaker (QF1) Check	Turn on the control power supply and check the open phase voltage of “U,V,W” of the circuit breaker (QF1) with an electric tester. If abnormal, replace the circuit breaker (QF1).

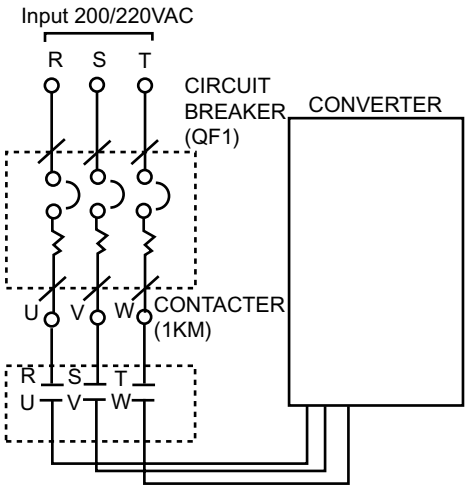

9 Replacing Parts

9.1 Replacing XRC Parts

WARNING

- Turn OFF the power supply before opening the XRC doors.

  Failure to observe this warning may result in electric shock.

- After turning OFF the power supply, wait at least 5 minutes before replacing a servopack or power supply unit. Do not touch any terminals during this period.

  Failure to observe this warning may result in electric shock.

CAUTION

- To prevent anyone inadvertently turning ON the power supply during maintenance, put up a warning sign such as "DO NOT TURN ON THE POWER" at the primary power supply (knife switch, wiring circuit breaker, etc.) and at the YASNAC XRC and related controllers and use accepted lockout/tagout procedures.

  Failure to observe this caution may result in electric shock or injury.

- Do not touch the regeneration resistors. They are very hot.

  Failure to observe this caution may result in burn injuries.

- After maintenance is completed, carefully check that no tools are left inside the YASNAC XRC and that the doors are securely closed.

  Failure to observe this caution may result in electric shock or injury.

9.1.1 Replacing Parts of the CPU Rack

CPU rack (JZNC-XRK01B-□) is comprised of the control power supply unit, the rack for the various circuit boards and system control boards.

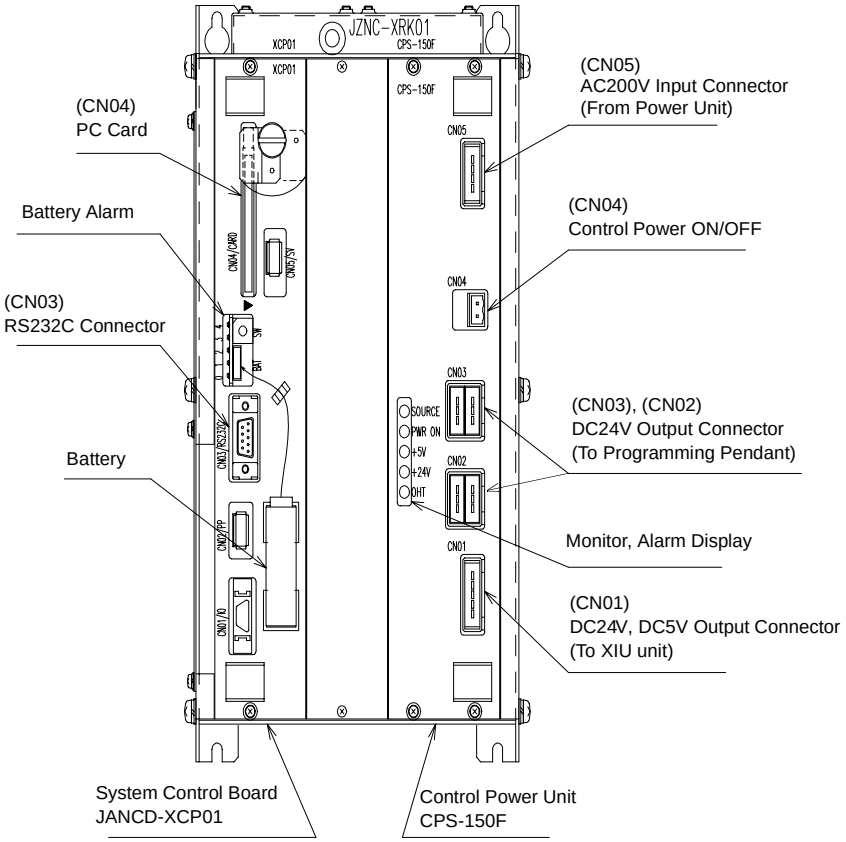

CPU Rack Configuration (JZNC-XRK01B-□)

■ Replacing the Battery

Replace the battery within 40 hours if a battery alarm occurs. If it is within 30 minute after turing on the electricity after the power was turned off for more than 2 days, replace the battery immediately.
(The battery alarms appear on the programing pendant display and LED on the system control board is turned on.)

Replacement Procedure

1. Disconnect the battery connector (BAT) and remove the battery.
2. Mount the new battery and connect the battery connector.

> **NOTE** Although the CMOS memory is backed up by super capacitor, the battery must be replaced as soon as the battery alarm occurs. The job data and other data may be lost if the battery is left for more than 40 hours.

■ Replacing the JANCD-XCP01 Circuit Board

Turn off the power before replacing a circuit board.

Replacement Procedure

1. Disconnect all cables connected to the circuit board.
2. Undo 2 screws fixing the circuit board and rack.
3. Spread the levers attached to the upper and lower side of circuit board up and down respectively and pull out the circuit board forward

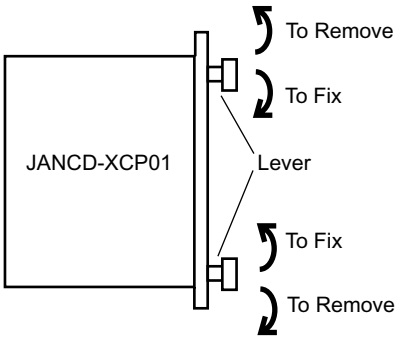

4. Pull out the circuit board from the rack.
5. Insert a new circuit board into the slot of the rack with the levers spread.
6. Push the board until it is placed in the same position of other boards.
7. Tighten upper and lower screws.
8. Connect all disconnected cables.

NOTE

The JANCD-XCP01 circuit board contains important file data for the user programs, which is backed up by the battery. Incorrect operations can cause this stored file data to be lost. When the JANCD-XCP01 circuit board is replaced, initialize the JANCD-XCP01 circuit board and load the CMOS file.

■ Replacing the Control Power Unit (CPS-150F)

CAUTION

- After turning OFF the power supply, wait at least 5 minutes before replacing a control power unit. Do not touch any terminals during this period. Confirm all monitor lights are turned off.

  Failure to observe this caution may result in electric shock or injury.

Replacement Procedure

1. Disconnect all cables connected to the control power unit.
2. Undo four upper and lower screws attaching the control power unit and the rack. (two screws on each side).
3. Pull out the control power unit from the rack holding the lever which is attached at the upper and lower side.
4. Insert the new control power unit in to the slot of the rack.
5. Push the new control power unit until it is placed in the same position of other boards.
6. Tighten upper and lower screws.
7. Connect all disconnected cables.

9.1.2 Replacing the Servopack

There are two kinds of Servopacks depending on capacity.

Type	Manipulator
Integrated Type	SV3X, UP6, SK16X
Separated Type	SK16MX, SK45X, UP130, UP165, UP200, UP130R

Replacement Procedure (Integrated Type)

1. Turn OFF the primary power supply and wait at least 5 minutes before replacing. Do not touch any terminals during this period.
2. Verify that the Servopack CHARGE lamp (red LED) is unlit.
3. Disconnect all the cables connected externally to the Servopack.
   ①Main circuit power supply connector (CN7)
   ②Regenerative resistor connector (CN8)
   ③Servo control power supply connector (1CN)
   ④Cables connected externally to the servo control board
   - PG cable connectors (CNPB123, CNPB456)
   - Communications cable connector (CN10)
   - Power ON signal cable connector (CN20)
   - Motor cable connectors (CN1 to CN6)
4. Remove the ground wiring connected to the Servopack.
5. Remove the four screws in the four corners of the Servopack.
6. With the top and bottom grips, pull out the Servopack.
7. Install the new Servopack and reconnect the connectors in the reverse order of that listed above.

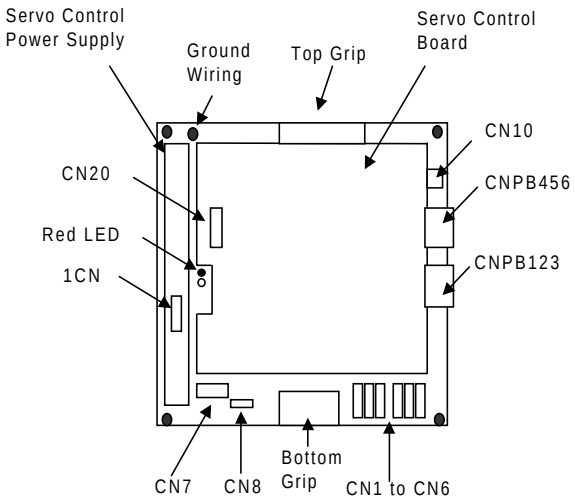

Configuration of Servopack (SV3X, UP6, SK16X)

Replacement Procedure (Separated Type)

a) SK16MX, SK45X

• How to Replace Converter

1. Turn OFF the primary power supply and wait at least 5 minutes before replacing. Do not touch any terminals during this period.
2. Verify that the converter CHARGE lamp (red LED) is unlit.
3. Disconnect all the cables connected externally to the converter.
   ①Main circuit power supply connector (CN7)
   ②Regenerative resistor connector (CN8)
   ③Servo control power supply connectors (1CN and 2CN)
   ④PN power supply terminals (P×1, N×1)
4. Remove the ground wiring connected to the converter.
5. Remove the four screws in the four corners of the converter.
6. With the top and bottom grips, pull out the converter.
7. Install the new converter and reconnect the connectors in the reverse order of that listed above.

• How to Replace PWM Amplifier

1. Turn OFF the primary power supply and wait at least 5 minutes before replacing. Do not touch any terminals during this period.
2. Verify that the converter CHARGE lamp (red LED) is unlit.
3. Disconnect all the cables connected externally to the control board.
   ①PG cable connectors (CNPB123, CNPB456)
   ②Communication cable connector (CN10)
   ③Power ON signal cable connector (CN20)
   ④Motor cable connectors (CN1 to CN6)
4. Remove the ground wiring connected to the PWM amplifier.
5. Remove the four screws in the four corners of the PWM amplifier.
6. With the top and bottom grips, pull out the PWM amplifier.
7. Install the new PWM amplifier and reconnect the connectors in the reverse order of that listed above.

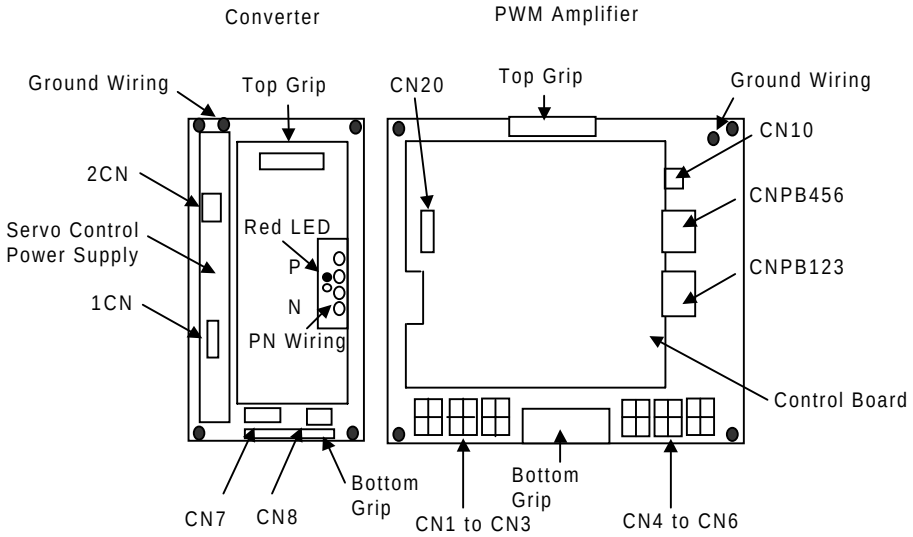

Configuration of Servopack (SK16MX, SK45X)

b) UP130, UP165, UP200, UP130R

• How to Replace Converter

1. Turn OFF the primary power supply and wait at least 5 minutes before replacing. Do not touch any terminals during this period.
2. Verify that the converter CHARGE lamp (red LED) is unlit.
3. Disconnect all the cables connected externally to the converter.
   ①Main circuit power supply terminals (TM1: L1, L2, L3)
   ②Regenerative resistor terminals (TM1: B1, B2)
   ③Servo control power supply connectors (1CN and 2CN)
   ④PN power supply terminals (P×2, N×2)
4. Remove the ground wiring connected to the converter.
5. Remove the four screws in the four corners of the converter.
6. With the top and bottom grips, pull out the converter.
7. Install the new converter and reconnect the connectors in the reverse order of that listed above.

• How to Replace PWM Amplifier

1. Turn OFF the primary power supply and wait at least 5 minutes before replacing. Do not touch any terminals during this period.
2. Verify that the converter CHARGE lamp (red LED) is unlit.
3. Disconnect all the cables connected externally to the control board.
   ①PG cable connectors(CNPB123, CNPB456)
   ②Communication cable connector (CN10)
   ③Power ON signal cable connector (CN20)
   ④Motor cable terminal (EUVW), motor cable connectors (CN4 to CN6)
4. Remove the ground wiring connected to the PWM amplifier.
5. Remove the four screws in the four corners of the PWM amplifier.
6. With the top and bottom grips, pull out the PWM amplifier.
7. Install the new PWM amplifier and reconnect the connectors in the reverse order of that listed above.

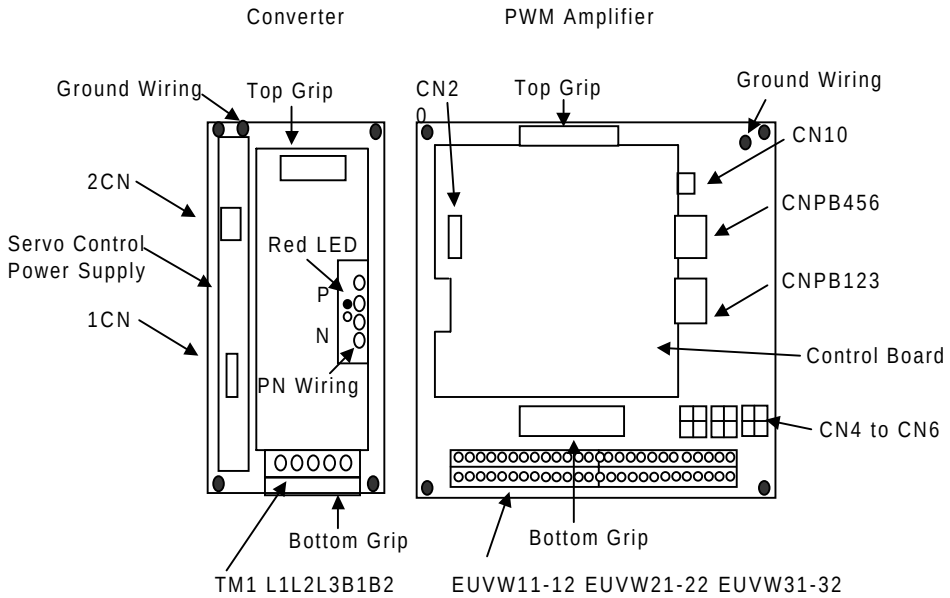

Configuration of Servopack (UP130, UP165, UP200, UP130R)

9.1.3 Replacing the parts of I/O Power-on Unit

■ Checking and Replacing Fuses

The types of fuses on the I/O power-on unit (JZNC-XIU01) and power-on unit (JANCD-XTU01) are as follows.

Parts No.	Fuse Name	Specification
FU1, 2	Control Power Supply Fuse	250V, 5A, Time Lag Fuse (Std.: 313005, 250V, 5A (LITTEL))
FU3, 4	DC24V Fuse	250V, 3A Rapid Cut Fuse (Std.: 312003 250V, 3A (LITTEL))
FU5, 6	Brake Fuse	GP40, 4.0A, 250V (Daito Tsushin)

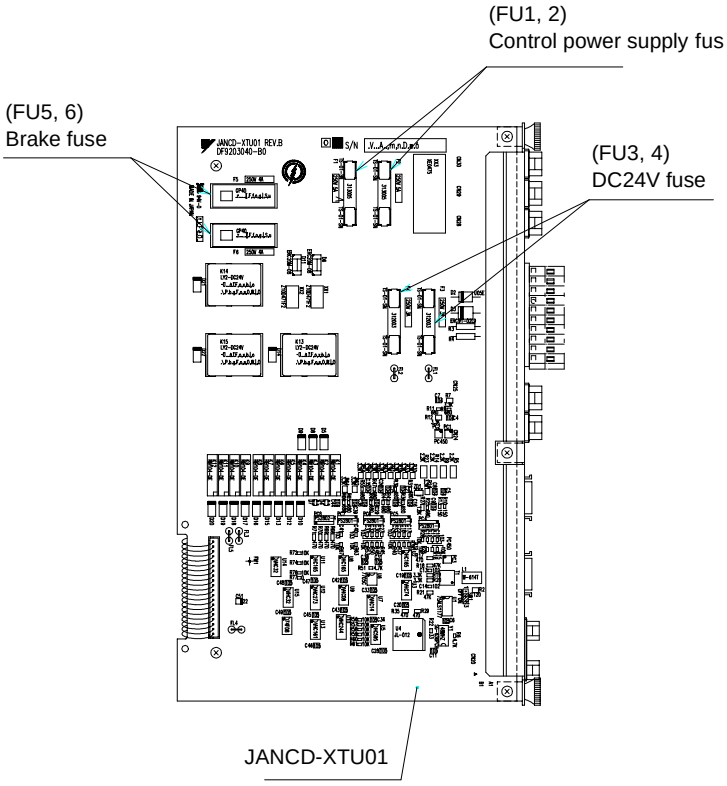

Fuse Position

If a fuse appears to be blown (see “10.2 Alarm Message List”), remove each fuse shown above and check the continuity with an electric tester. If the fuse is blown, replace it with the same type of fuse (supplied).

NOTE Determine and correct the cause of the blown fuse. If the problem is uncorrected, the fuse may blow again.

9.2 YASNAC XRC Parts List

YASNAC XRC Parts List

No.	Name	Model	Comment
1	Servopack	***1**	6 Axis type
2	CPU rack	JZNC-XRK01B-□	
	Backboard	JANCD-XBB01	
	System control circuit board	JANCD-XCP01	
	High speed serial interface circuit board	JANCD-XIF03	
	Control power supply	CPS-150F	
3	I/O Power-on unit	JZNC-XIU01	
	Power-on circuit board	JANCD-XTU01	
	Specific I/O circuit board	JANCD-XIO01	
	General I/O circuit board	JANCD-XIO02	
4	Power supply unit	***2**	
5	Playback panel	ZY1C-SS3152	
6	Servo ascending fan	3610PS-22T-B30-B00	
7	Backside duct fan	4715PS-22T-B30-B00	Small capacity
		5915PS-22T-B30-B00	Large capacity
8	Heat exchanger	YD5-1042A	Large capacity only
9	Contactor circuit board fuse	313005, 5A, 250V	Time lag fuse
		312003, 3A, 250V	Rapid cut fuse
		GP40, 4.0A, 250V	Alarm fuse
10	Contactor circuit board relay	LY2 DC24V	
11	Battery	ER6VC3N 3.6V	

***1** The type of the servopack depends on the robot model. For details, see the " Table. Servopack List (Small Capacity) ", " Table. Servopack List (Large Capacity) ".

***2** The type of the power supply unit depends on the robot model. For detail, see the " Table. Power Supply Unit List ".

Servopack List (Small Capacity)

Component			SV3X	UP6	SK16X
			Type	Type	Type
Servopack			CACR-SV3AAA	CACR-UP6AAC	CACR-SK16AAC
	Converter		JUSP-ACP05JAA	JUSP-ACP05JAA	JUSP-ACP05JAA
	Amplifier	S	JUSP-WS02AA	JUSP-WS05AAY17	JUSP-WS10AAY17
		L	JUSP-WS02AA	JUSP-WS10AAY17	JUSP-WS10AAY17
		U	JUSP-WS01AA	JUSP-WS05AAY17	JUSP-WS10AAY17
		R	JUSP-WSA5AA	JUSP-WS01AA	JUSP-WS02AA
		B	JUSP-WSA5AA	JUSP-WS01AA	JUSP-WS02AA
		T	JUSP-WSA5AA	JUSP-WS01AA	JUSP-WS02AA
	Servo control circuit board		JASP-WRCA01	JASP-WRCA01	JASP-WRCA01
	Control power supply		JUSP-RCP01AAB	JUSP-RCP01AAB	JUSP-RCP01AAB

Servopack List (Large Capacity)

Component			SK16MX	SK45X	UP130, UP165
			Type	Type	Type
Servopack			CACR-UP16MAAB	CACR-SK45AAB	CACR-SV130AAB
	Amplifier	S	JUSP-WS30AA	JUSP-WS30AA	JUSP-WS60AA
		L	JUSP-WS20AA	JUSP-WS20AA	JUSP-WS60AA
		U	JUSP-WS20AA	JUSP-WS20AA	JUSP-WS60AA
		R	JUSP-WS02AA	JUSP-WS10AA	JUSP-WS20AAY13
		B	JUSP-WS02AA	JUSP-WS10AA	JUSP-WS15AAY13
		T	JUSP-WS02AA	JUSP-WS10AA	JUSP-WS15AAY13
	Servo control circuit board		JASP-WRCA01	JASP-WRCA01	JASP-WRCA01
Converter			JUSP-ACP35JAA	JUSP-ACP25JAA	JUSP-ACP35JAA
	Control power supply		JUSP-RCP01AAB	JUSP-RCP01AAB	JUSP-RCP01AAB

Servopack List (Large Capacity)

Component			UP200, UP130R
			Type
Servopack			CACR-UP130AABY18
	Amplifier	S	JUSP-WS60AAY18
		L	JUSP-WS60AAY18
		U	JUSP-WS60AA
		R	JUSP-WS20AAY13
		B	JUSP-WS15AAY13
		T	JUSP-WS15AAY13
	Servo control circuit board		JASP-WRCA01
Converter			JUSP-ACP35JAA
	Control power supply		JUSP-RCP01AAB

Power Supply Unit List

Type	Robot Type
JZNC-XPW03B or JZRCR-XPU03	SV3X, UP6, SK16X
JZRCR-XPU02	SK16MX, SK45X
JZRCR-XPU01-□	UP130, UP165, UP200, UP130R

9.3 Supplied Parts List

The supplied parts of YASNAC XRC is as follows.
Parts No.1 to 3 are used for fuse for replacement and No.4 is used as a tool for connecting the I/O.

No	Parts Name	Dimensions	Pcs	Model	Application
1	5A Glass-Tube fuse	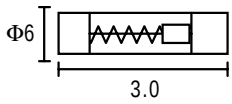	2	313005 5A 250V (LITTEL)	JANCD-XTU01 FU1, 2
2	3A Glass-Tube fuse	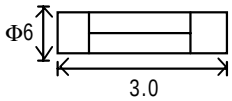	2	312003 3A 250V (LITTEL)	JANCD-XTU01 FU3, 4
3	4.0A Alarm fuse	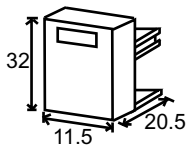	2	GP40 4.0A 250V (Daito Tsushin)	JANCD-XTU01 FU5, 6
4	WAGO Connector wiring tool	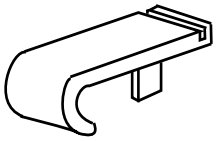	2	231-131 (WAGO)	JANCD-XI001 CN05, 06 JANCD-XTU01 CN26, 27 CPS-150F CN04

9.4 Recommended Spare Parts

It is recommended that the following parts and components be kept in stock as spare parts for the XRC. The spare parts list for the XRC is shown below. Product performance can not be guaranteed when using spare parts from any company other than Yaskawa. To buy the spare parts which are ranked B or C, inform the manufacturing number (or order number) of XRC to Yaskawa representative. The spare parts are ranked as follows:

- Rank A: Expendable and frequently replaced parts
- Rank B: Parts for which replacement may be necessary as a result of frequent operation
- Rank C: Drive unit

NOTE For replacing parts in Rank B or Rank C, contact your Yaskawa representative.

Recommended Spare Parts of XRC for SV3X

No	Rank	Name	Type	Mfr.	Qty	Qty per unit	Remark
1	A	Battery	ER6VC3N 3.6V	Toshiba Battery	1	1	
2	A	Rack Fan	JZNC-XZU02	Yaskawa	2	2	
3	A	Backside Duct Fan	4715PS-22T-B30-B00	Minebea	2	2	
4	A	Servopack Ascending Fan	3610PS-22T-B30-B00	Minebea	2	2	
5	A	Control Power Fuse	313005 5A 250V	Littel fuse	10	2	
6	A	24VDC Fuse	312003 3A 250V	Littel fuse	10	2	
7	A	Brake Fuse	GP40 4.0A 250V	Daito Communication Apparatus	10	2	
8	A	Control Relay	LY2 DC24V	Omron	3	3	
9	B	Convertor	JUSP-ACP05JAA	Yaskawa	1	1	
10	B	Control Power Unit	JUSP-RCP01AAB	SANRITZ	1	1	For Servo
11	B	Servopack Control Board	JASP-WRCA01	Yaskawa	1	1	
12	B	Amplifier	JUSP-WS02AA	Yaskawa	1	2	For S,L axes
13	B	Amplifier	JUSP-WS01AA	Yaskawa	1	1	For U axis
14	B	Amplifier	JUSP-WSA5AA	Yaskawa	1	3	For R,B,T axes
15	B	Control Power Unit	CPS-150F	Fuji Electric Hi-Tech	1	1	For CPU Unit
16	B	System Control Board	JANCD-XCP01	Yaskawa	1	1	
17	B	Communication Board	JANCD-XIF03	Yaskawa	1	1	
18	B	Specific I/O Board	JANCD-XIO01	Yaskawa	1	1	
19	B	Genenal I/O Board	JANCD-XIO02	Yaskawa	1	1	
20	B	Power On Board	JANCD-XTU01	Yaskawa	1	1	
21	C	Servopack	CACR-SV3AAA	Yaskawa	1	1	
22	C	CPU Unit	JZNC-XRK01B-1	Yaskawa	1	1	
23	C	I/O Power On Unit	JZNC-XIU01	Yaskawa	1	1	
24	C	Power Unit	JZRCR-XPU03	Yaskawa	1	1	
25	C	Programming Pendant	JZNC-XPP02	Yaskawa	1	1	With Cable 8m

*Specify application (Arc, General, Spot, Handling) of key sheet when No.25 “ Programming Pendant” is ordered.

Recommended Spare Parts of XRC for UP6

No	Rank	Name	Type	Mfr.	Qty	Qty per unit	Remark
1	A	Battery	ER6VC3N 3.6V	Toshiba Battery	1	1	
2	A	Rack Fan	JZNC-XZU02	Yaskawa	2	2	
3	A	Backside Duct Fan	4715PS-22T-B30-B00	Minebea	2	2	
4	A	Servopack Ascending Fan	3610PS-22T-B30-B00	Minebea	2	2	
5	A	Control Power Fuse	313005 5A 250V	Littel fuse	10	2	
6	A	24VDC Fuse	312003 3A 250V	Littel fuse	10	2	
7	A	Brake Fuse	GP40 4.0A 250V	Daito Com-munication Apparatus	10	2	
8	A	Control Relay	LY2 DC24V	Omron	3	3	
9	B	Convertor	JUSP-ACP05JAA	Yaskawa	1	1	
10	B	Control Power Unit	JUSP-RCP01AAB	SANRITZ	1	1	For Servo
11	B	Servopack Control Board	JASP-WRCA01	Yaskawa	1	1	
12	B	Amplifier	JUSP-WS05AAY17	Yaskawa	1	2	For S,U axes
13	B	Amplifier	JUSP-WS10AAY17	Yaskawa	1	1	For L axis
14	B	Amplifier	JUSP-WS01AA	Yaskawa	1	3	For R,B,T axes
15	B	Control Power Unit	CPS-150F	Fuji Electric Hi-Tech	1	1	For CPU Unit
16	B	System Control Board	JANCD-XCP01	Yaskawa	1	1	
17	B	Communication Board	JANCD-XIF03	Yaskawa	1	1	
18	B	Specific I/O Board	JANCD-XIO01	Yaskawa	1	1	
19	B	Genenal I/O Board	JANCD-XIO02	Yaskawa	1	1	
20	B	Power On Board	JANCD-XTU01	Yaskawa	1	1	
21	C	Servopack	CACR-UP6AAC	Yaskawa	1	1	
22	C	CPU Unit	JZNC-XRK01B-1	Yaskawa	1	1	
23	C	I/O Power On Unit	JZNC-XIU01	Yaskawa	1	1	
24	C	Power Unit	JZRCR-XPU03	Yaskawa	1	1	
25	C	Programming Pendant	JZNC-XPP02	Yaskawa	1	1	With Cable 8m

*Specify application (Arc, General, Spot, Handling) of key sheet when No.25 “ Programming Pendant” is ordered.

Recommended Spare Parts of XRC for SK16X

No	Rank	Name	Type	Mfr.	Qty	Qty per unit	Remark
1	A	Battery	ER6VC3N 3.6V	Toshiba Battery	1	1	
2	A	Rack Fan	JZNC-XZU02	Yaskawa	2	2	
3	A	Backside Duct Fan	4715PS-22T-B30-B00	Minebea	2	2	
4	A	Servopack Ascending Fan	3610PS-22T-B30-B00	Minebea	2	2	
5	A	Control Power Fuse	313005 5A 250V	Littel fuse	10	2	
6	A	24VDC Fuse	312003 3A 250V	Littel fuse	10	2	
7	A	Brake Fuse	GP40 4.0A 250V	Daito Communication Apparatus	10	2	
8	A	Control Relay	LY2 DC24V	Omron	3	3	
9	B	Convertor	JUSP-ACP05JAA	Yaskawa	1	1	
10	B	Control Power Unit	JUSP-RCP01AAB	SANRITZ	1	1	For Servo
11	B	Servopack Control Board	JASP-WRCA01	Yaskawa	1	1	
12	B	Amplifier	JUSP-WS10AAY17	Yaskawa	1	3	For S,U axes
13	B	Amplifier	JUSP-WS02AA	Yaskawa	1	3	For L axis
14	B	Control Power Unit	CPS-150F	Yaskawa	1	1	For R,B,T axes
15	B	System Control Board	JANCD-XCP01	Fuji Electric Hi-Tech	1	1	For CPU Unit
16	B	Communication Board	JANCD-XIF03	Yaskawa	1	1	
17	B	Specific I/O Board	JANCD-XIO01	Yaskawa	1	1	
18	B	Genenal I/O Board	JANCD-XIO02	Yaskawa	1	1	
19	B	Power On Board	JANCD-XTU01	Yaskawa	1	1	
20	C	Servopack	CACR-SK16AAC	Yaskawa	1	1	
21	C	CPU Unit	JZNC-XRK01B-1	Yaskawa	1	1	
22	C	I/O Power On Unit	JZNC-XIU01	Yaskawa	1	1	
23	C	Power Unit	JZRCR-XPU03	Yaskawa	1	1	
24	C	Programming Pendant	JZNC-XPP02	Yaskawa	1	1	With Cable 8m

*Specify application (Arc, General, Spot, Handling) of key sheet when No.24 “ Programming Pendant” is ordered.

Recommended Spare Parts of XRC for SK16MX

No	Rank	Name	Type	Mfr.	Qty	Qty per unit	Remark
1	A	Battery	ER6VC3N 3.6V	Toshiba Battery	1	1	
2	A	Rack Fan	JZNC-XZU02	Yaskawa	2	2	
3	A	Backside Duct Fan	5915PC-22T-B30-B00	Minebea	2	2	
4	A	Servopack Ascending Fan	3610PS-22T-B30-B00	Minebea	3	3	
5	A	Control Power Fuse	313005 5A 250V	Littel fuse	10	2	
6	A	24VDC Fuse	312003 3A 250V	Littel fuse	10	2	
7	A	Brake Fuse	GP40 4.0A 250V	Daito Com-munication Apparatus	10	2	
8	A	Control Relay	LY2 DC24V	Omron	3	3	
9	B	Convertor	JUSP-ACP25JAA	Yaskawa	1	1	
10	B	Control Power Unit	JUSP-RCP01AAB	SANRITZ	1	1	For Servo
11	B	Servopack Control Board	JASP-WRCA01	Yaskawa	1	1	
12	B	Amplifier	JUSP-WS30AA	Yaskawa	1	1	For S axis
13	B	Amplifier	JUSP-WS20AA	Yaskawa	1	2	For L,U axes
14	B	Amplifier	JUSP-WS02AA	Yaskawa	1	3	For R,B,T axes
15	B	Control Power Unit	CPS-150F	Fuji Electric Hi-Tech	1	1	For CPU Unit
16	B	System Control Board	JANCD-XCP01	Yaskawa	1	1	
17	B	Communication Board	JANCD-XIF03	Yaskawa	1	1	
18	B	Specific I/O Board	JANCD-XIO01	Yaskawa	1	1	
19	B	Genenal I/O Board	JANCD-XIO02	Yaskawa	1	1	
20	B	Power On Board	JANCD-XTU01	Yaskawa	1	1	
21	C	Servopack	CACR-SK16MAAB	Yaskawa	1	1	
22	C	CPU Unit	JZNC-XRK01B-1	Yaskawa	1	1	
23	C	I/O Power On Unit	JZNC-XIU01	Yaskawa	1	1	
24	C	Power Unit	JZRCR-XPU02	Yaskawa	1	1	
25	C	Programming Pendant	JZNC-XPP02	Yaskawa	1	1	With Cable 8m

*Specify application (Arc, General, Spot, Handling) of key sheet when No.25 “ Programming Pendant” is ordered.

Recommended Spare Parts of XRC for SK45X

No	Rank	Name	Type	Mfr.	Qty	Qty per unit	Remark
1	A	Battery	ER6VC3N 3.6V	Toshiba Battery	1	1	
2	A	Rack Fan	JZNC-XZU02	Yaskawa	2	2	
3	A	Backside Duct Fan	5915PC-22T-B30-B00	Minebea	2	2	
4	A	Servopack Ascending Fan	3610PS-22T-B30-B00	Minebea	3	3	
5	A	Control Power Fuse	313005 5A 250V	Littel fuse	10	2	
6	A	24VDC Fuse	312003 3A 250V	Littel fuse	10	2	
7	A	Brake Fuse	GP40 4.0A 250V	Daito Communication Apparatus	10	2	
8	A	Control Relay	LY2 DC24V	Omron	3	3	
9	B	Convertor	JUSP-ACP25JAA	Yaskawa	1	1	
10	B	Control Power Unit	JUSP-RCP01AAB	SANRITZ	1	1	For Servo
11	B	Servopack Control Board	JASP-WRCA01	Yaskawa	1	1	
12	B	Amplifier	JUSP-WS30AA	Yaskawa	1	1	For S,U axes
13	B	Amplifier	JUSP-WS20AA	Yaskawa	1	2	For L axis
14	B	Amplifier	JUSP-WS10AA	Yaskawa	1	3	For R,B,T axes
15	B	Control Power Unit	CPS-150F	Fuji Electric Hi-Tech	1	1	For CPU Unit
16	B	System Control Board	JANCD-XCP01	Yaskawa	1	1	
17	B	Communication Board	JANCD-XIF03	Yaskawa	1	1	
18	B	Specific I/O Board	JANCD-XIO01	Yaskawa	1	1	
19	B	Genenal I/O Board	JANCD-XIO02	Yaskawa	1	1	
20	B	Power On Board	JANCD-XTU01	Yaskawa	1	1	
21	C	Servopack	CACR-SK45AAB	Yaskawa	1	1	
22	C	CPU Unit	JZNC-XRK01B-1	Yaskawa	1	1	
23	C	I/O Power On Unit	JZNC-XIU01	Yaskawa	1	1	
24	C	Power Unit	JZRCR-XPU02	Yaskawa	1	1	
25	C	Programming Pendant	JZNC-XPP02	Yaskawa	1	1	With Cable 8m

*Specify application (Arc, General, Spot, Handling) of key sheet when No.25 “ Programming Pendant” is ordered.

Recommended Spare Parts of XRC for UP130, UP165

No	Rank	Name	Type	Mfr.	Qty	Qty per unit	Remark
1	A	Battery	ER6VC3N 3.6V	Toshiba Battery	1	1	
2	A	Rack Fan	JZNC-XZU02	Yaskawa	2	2	
3	A	Backside Duct Fan	5915PC-22T-B30-B00	Minebea	2	2	
4	A	Servopack Ascending Fan	3610PS-22T-B30-B00	Minebea	4	4	
5	A	Heat Exchanger Fan	4710PS-22T-B30	Littel fuse	2	2	
6	A	Control Power Fuse	313005 5A 250V	Littel fuse	10	2	
7	A	24VDC Fuse	312003 3A 250V	Daito Communication Apparatus	10	2	
8	A	Brake Fuse	GP40 4.0A 250V	Omron	10	2	
9	A	Control Relay	LY2 DC24V	Yaskawa	3	3	
10	B	Convertor	JUSP-ACP35JAA	SANRITZ	1	1	
11	B	Control Power Unit	JUSP-RCP01AAB	Yaskawa	1	1	For Servo
12	B	Servopack Control Board	JASP-WRCA01	Yaskawa	1	1	
13	B	Amplifier	JUSP-WS60AA	Yaskawa	1	3	For S,L,U axes
14	B	Amplifier	JUSP-WS20AAY13	Yaskawa	1	1	For R axis
15	B	Amplifier	JUSP-WS15AAY13	Yaskawa	1	2	For B,T axes
16	B	Capacitor Unit	JUSP-WC662A	Yaskawa	1	1	
17	B	Control Power Unit	CPS-150F	Fuji Electric Hi-Tech	1	1	For CPU Unit
18	B	System Control Board	JANCD-XCP01	Yaskawa	1	1	
19	B	Communication Board	JANCD-XIF03	Yaskawa	1	1	
20	B	Specific I/O Board	JANCD-XIO01	Yaskawa	1	1	
21	B	Genenal I/O Board	JANCD-XIO02	Yaskawa	1	1	
22	B	Power On Board	JANCD-XTU01	Yaskawa	1	1	
23	C	Servopack	CACR-UP130AAB	Yaskawa	1	1	
24	C	CPU Unit	JZNC-XRK01B-1	Yaskawa	1	1	
25	C	I/O Power On Unit	JZNC-XIU01	Yaskawa	1	1	
26	C	Power Unit	JZRCR-XPU01-2S	Yaskawa	1	1	
27	C	Programming Pendant	JZNC-XPP02	Yaskawa	1	1	With Cable 8m

*Specify application (Arc, General, Spot, Handling) of key sheet when No.27 “ Programming Pendant” is ordered.

Recommended Spare Parts of XRC for UP200, UP130R

No	Rank	Name	Type	Mfr.	Qty	Qty per unit	Remark
1	A	Battery	ER6VC3N 3.6V	Toshiba Battery	1	1	
2	A	Rack Fan	JZNC-XZU02	Yaskawa	2	2	
3	A	Backside Duct Fan	5915PC-22T-B30-B00	Minebea	2	2	
4	A	Servopack Ascending Fan	3610PS-22T-B30-B00	Minebea	4	4	
5	A	Heat Exchanger Fan	4710PS-22T-B30	Minebea	2	2	
6	A	Control Power Fuse	313005 5A 250V	Littel fuse	10	2	
7	A	24VDC Fuse	312003 3A 250V	Littel fuse	10	2	
8	A	Brake Fuse	GP40 4.0A 250V	Daito Communication Apparatus	10	2	
9	A	Control Relay	LY2 DC24V	Omron	3	3	
10	B	Convertor	JUSP-ACP35JAA	Yaskawa	1	1	
11	B	Control Power Unit	JUSP-RCP01AAB	SANRITZ	1	1	For Servo
12	B	Servopack Control Board	JASP-WRCA01	Yaskawa	1	1	
13	B	Amplifier	JUSP-WS60AAY18	Yaskawa	1	2	For S,L axes
14	B	Amplifier	JUSP-WS60AA	Yaskawa	1	1	For U axis
15	B	Amplifier	JUSP-WS20AAY13	Yaskawa	1	1	For R axis
16	B	Amplifier	JUSP-WS15AAY13	Yaskawa	1	2	For B,T axes
17	B	Capacitor Unit	JUSP-WC662A	Yaskawa	1	1	
18	B	Control Power Unit	CPS-150F	Fuji Electric Hi-Tech	1	1	For CPU Unit
19	B	System Control Board	JANCD-XCP01	Yaskawa	1	1	
20	B	Communication Board	JANCD-XIF03	Yaskawa	1	1	
21	B	Specific I/O Board	JANCD-XIO01	Yaskawa	1	1	
22	B	Genenal I/O Board	JANCD-XIO02	Yaskawa	1	1	
23	B	Power On Board	JANCD-XTU01	Yaskawa	1	1	
24	C	Servopack	CACR-UP130AABY18	Yaskawa	1	1	
25	C	CPU Unit	JZNC-XRK01B-1	Yaskawa	1	1	
26	C	I/O Power On Unit	JZNC-XIU01	Yaskawa	1	1	
27	C	Power Unit	JZRCR-XPU01-2S	Yaskawa	1	1	
28	C	Programming Pendant	JZNC-XPP02	Yaskawa	1	1	With Cable 8m

*Specify application (Arc, General, Spot, Handling) of key sheet when No.28 “ Programming Pendant” is ordered.

Alarm • Error

10 Alarm

10.1 Outline of Alarm

When the alarm of level 0-3(major alarm) occurs, the servo power supply is interrupted.

Alarm Code classification.

Alarm Code	Alarm Level	Alarm Reset Method
0□□□	Level 0 (Major alarm) (Off line alarm: Initial diagnosis/ Hardware diagnosis alarm)	It is not possible to reset by [RESET] under the alarm display or the specific I/O signal (Alarm reset). Turn off the main power supply and correct the cause of the alarm. Then turn on the main power supply again.
1□□□ - 3□□□	Level 1-3 (Major alarm)	It is not possible to reset by [RESET] under the alarm display or the specific I/O signal (Alarm reset). Turn off the main power supply and correct the cause of the alarm. Then turn on a main power supply again.
4□□□ - 8□□□	Level 4-8 (Minor alarm)	After correcting the cause, it is possible to reset by [RESET] under the alarm display or the specific I/O signal (Alarm reset).
9□□□	Level 9 (Minor alarm) (I/O Alarm)	After correcting the cause that the specific input signal for the system or user alarm request is input, it is possible to reset by [RESET] under the alarm display or the specific I/O signal (Alarm reset).

10.2 Alarm Display

10.2.1 Displaying/Releasing Alarm

If an alarm occurs during operation, the manipulator stops immediately, the alarm/error lamp on the playback panel lights and the alarm display appears on the programming pendant indicating that the machine was stopped by an alarm.

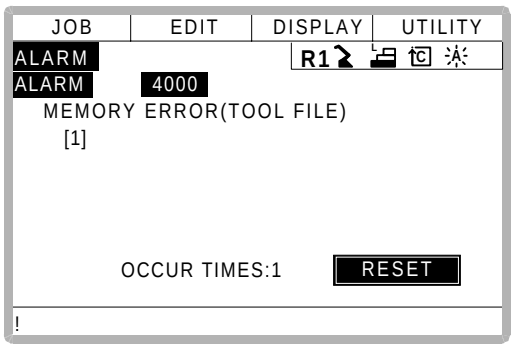

If more than one alarm occurs simultaneously, the first four alarms are displayed. The fifth and subsequent alarms are not displayed, but they can be checked on the alarm history display. The following operations are available in the alarm status: display change, mode change, alarm reset, and emergency stop. If the display is changed to the other during alar occurrence, the alarm display can be shown again by selecting {SYSTEM INFO} and {ALARM} under the menu.

Release

Alarms are classified by minor and major alarms.

Minor Alarms

Operation

Press [SELECT]*1

Explanation

*1 Select [RESET] under the alarm display to release the alarm status. When using an external input signal, turn on the “ALARM RESET” setting.

Major Alarms

Operation

Turn off the main power supply and remove the cause of the alarm*1

Explanation

*1 If a severe alarm, such as hardware failure occurs, servo power is automatically shut off and the manipulator stops. If releasing does not work, turn off the main power and correct the cause of the alarm.

10.2.2 Special Alarm Display

(1) Sub Data

Sub data such as data for the axis where the alarm occurred, may also be displayed for some alarms.

- Decimal data
  Without signs: 0 to 65535
  With signs: -32768 to 32767

- Binary data
  The alarm occurrence data becomes “1.”
  With 8 bits: 0000_0001
  With 16 bits: 00000001_00000001

- Axis data
  The axis where the alarm occurred is highlighted.

With robot axis: Robots	[S L U R B T]	to	3
With base axis: Robots	[1 2 3]	to	3
With station axis: Stations	[1 2 3]	to	6

- XYZ coordinate data
  The coordinates when the alarm occurred are highlighted.
  [X Y Z]
  [X Y Z Tx Ty Tz]

- 123 data
  The data for the alarm that occurred is highlighted.
  [1 2 3]

- Control group data
  The control group where the alarm occurred is highlighted.
  [R1 R2 S1 S2 S3]

(2) Multiple Servopack System

In a system using more than one Servopack, the number of the Servopack where the alarm occurred is also displayed. The S1 switch of the WRCA01 board shows the Servopack number.

SV#1: Servopack 1 (WRCA01 board S1 switch: 0)
SV#2: Servopack 2 (WRCA01 board S1 switch: 1)
SV#3: Servopack 3 (WRCA01 board S1 switch: 2)
SV#4: Servopack 4 (WRCA01 board S1 switch: 3)
SV#5: Servopack 5 (WRCA01 board S1 switch: 4)
SV#6: Servopack 6 (WRCA01 board S1 switch: 5)

(3) Independent Control Function (Optional)

In the independent control function (multi-task job), the tasks that were being done when the alarm occurred are also displayed.

TASK#0: Master-task job
TASK#1: Sub-task1 job (SUB1)
TASK#2: Sub-task2 job (SUB2)
TASK#3: Sub-task3 job (SUB3)
TASK#4: Sub-task4 job (SUB4)
TASK#5: Sub-task5 job (SUB5)

10.3 Alarm Message List

CAUTION

Pay special attention when performing any repairs for system control circuit board "JANCD-XCP01". Personnel must be appropriately skilled in maintenance mode operation to carry out repairs.
JANCD-XCP01 back up very important file data for the user program with a battery. Careless operation may delete registered data. If repairs for JANCD-XCP01 are necessary, consult YASKAWA representative before performing any repairs.

Alarm Message List

Alarm Number	Message	Cause	Remedy
0010	CPU BOARD INSERTION ERROR [Decimal Data]	• Insertion of the circuit board was not completed • Defective circuit board Data stands for error circuit board 10:XCP02 circuit board (#1-0) 11:XCP02 circuit board (#1-1 12:XCP02 circuit board (#1-2) 20:XCP02 circuit board (#2-0) 21:XCP02 circuit board (#2-1) 22:XCP02 circuit board (#2-2) (Note) XCP02 circuit board (#□- ■) □:Slot NO. ■:0 →XCP02 circuit board (main) 1 →Sub-board1(connector CNSL side 2 →Sub-board2(connector CNET side)	• Check whether the circuit board is correctly inserted. • Replace the circuit board.
0020	CPU COMMUNICATION ERROR [Decimal Data]	• Insertion of the circuit board was not completed • Defective circuit board Data stands for an error circuit board 10:XCP02 circuit board (#1-0) 11:XCP02 circuit board (#1-1 12:XCP02 circuit board (#1-2) 20:XCP02 circuit board (#2-0) 21:XCP02 circuit board (#2-1) 22:XCP02 circuit board (#2-2) (Note) XCP02 circuit board (# □-■) □:Slot NO. ■:0 →XCP02 circuit board (main) 1 →Sub-board1(connector CNSL side 2 →Sub-board2(connector CNET side)	• Check whether the circuit board is correctly inserted. • Replace the circuit board.

Alarm Message List

Alarm Number	Message	Cause	Remedy
0021	COMMUNICATION ERROR(SERVO [Decimal Data]	• The connection of communication cable for servopack was not completed. • The connection of communication cable for servopack was not cut. • The connection of terminal connector was not completed. • The terminal connector was unusual. • The circuit board was out of order. • (The terminal connector was equipped for a system). Data stands for an error circuit board 50:WRCA01 circuit board (#1 51:WRCA01 circuit board (#2 52:WRCA01 circuit board (#3 53:WRCA01 circuit board (#4 54:WRCA01 circuit board (#5 55:WRCA01 circuit board (#6 (Note) WRCA01 circuit board (# □) The setting value of rotary switch on the WRCA01 circuit board is (□ -1).	• Check the connection of communication cable for servopack. • (XCP01·CN05 - WRCA(#*)·CN10 cable, WRCA·CN10(#*) - WRCA • CN10(#*) cable) • Replace the communication connector for servopack. • Check the connection of the terminal connector (WRCA·CN10(#*)). • Replace the terminal connector. • Replace the circuit board.
0030	ROM ERROR [Decimal Data]	An error was found by sum check of syste program. Data stands for an error circuit board 1:XCP01 circuit board 2:XSP01 circuit board 10:XCP02 circuit board (#1-0) 11:XCP02 circuit board (#1-1) 12:XCP02 circuit board (#1-2) 20:XCP02 circuit board (#2-0) 21:XCP02 circuit board (#2-1) 22:XCP02 circuit board (#2-2) (Note) XCP02 circuit board (#□ -■) □:Slot NO. ■:0 → XCP02 circuit board (main) 1 → Sub-board1(connector CNSL side) 2 → Sub-board2(connector CNET side 50:WRCA01 circuit board (#1 51:WRCA01 circuit board (#2 52:WRCA01 circuit board (#3 53:WRCA01 circuit board (#4 54:WRCA01 circuit board (#5 55:WRCA01 circuit board (#6 (Note) WRCA01 circuit board (# □) The setting value of rotary switch on the WRCA01 circuit board is (□ -1).	• Replace the circuit board. • When the XCP01 circuit board is replaced, consult YASKAWA representative.

Alarm Message List

Alarm Number	Message	Cause	Remedy
0040	MEMORY ERROR (CPU BOARD RAM) [Decimal Data]	Memory (RAM) error Data stands for an error circuit board 1:XCP01 circuit board 2:XSP01 circuit board 10:XCP02 circuit board (#1-0) 11:XCP02 circuit board (#1-1 12:XCP02 circuit board (#1-2) 20:XCP02 circuit board (#2-0) 21:XCP02 circuit board (#2-1) 22:XCP02 circuit board (#2-2) (Note) XCP02 circuit board (#□ - ■) □:Slot NO. ■:0 → XCP02 circuit board (main 1 → Sub-board1(connector CNSL side) 2 → Sub-board2(connector CNET side) 50:WRCA01 circuit board (#1) 51:WRCA01 circuit board (#2) 52:WRCA01 circuit board (#3) 53:WRCA01 circuit board (#4) 54:WRCA01 circuit board (#5) 55:WRCA01 circuit board (#6) (Note) WRCA01 circuit board (# □) The setting value of rotary switch on the WRCA01 circuit board is □ -1)	• Replace the circuit board. • When the XCP01 circuit board is replaced, consult a YASKAWA representative.
0050	MEMORY ERROR(PCI-BUS COMMON RAM) [Decimal Data]	A error occurred in PCI bus shared RAM of the CPU rack or shared RAM between circuit boards. Data stands for an error circuit board 10:XCP02 circuit board (#1-0) 11:XCP02 circuit board (#1-1 12:XCP02 circuit board (#1-2) 20:XCP02 circuit board (#2-0) 21:XCP02 circuit board (#2-1) 22:XCP02 circuit board (#2-2) (Note) XCP02 circuit board (# □ -■) □:Slot NO. ■:0 → XCP02 circuit board (main 1 → Sub-board1(connector CNSL side) 2 → Sub-board2(connector CNET side)	Replace the circuit board.

Alarm Message List

Alarm Number	Message	Cause	Remedy
0060	COMMUNICATION ERROR(I/O MODULE) [Decimal Data]	• An error occurred in communication of I/O module. • Defective I/O module Data stands for the error I/O module. 1-15: I/O module connected with XCP01circuit board 17-31:Contactor circuit board, speed detect circuit board connected with WRCA01 circuit board(#1) 33-47:Contactor circuit board, speed detect circuit board connected with WRCA01 circuit board(#2) 49-63:Contactor circuit board, speed detect circuit board connected with WRCA01 circuit board(#3) 65-79:Contactor circuit board, speed detect circuit board connected with WRCA01 circuit board(#4) 81-95:Contactor circuit board, speed detect circuit board connected with WRCA01 circuit board(#5) 97-111:Contactor circuit board, speed detect circuit board connected with WRCA01 circuit board(#6) (Note) WRCA01 circuit board (#□) The setting value of rotary switch on the WRCA circuit board is (□ -1)	• Check the connection of the communication cable for I/O module. (XCP01·CN01 - XIU01·CN03 cable, WRCA01(#*)·CN20 - XIU01·CN21 cable) • Replace the communication connector for I/O module.
0200	MEMORY ERROR (PARAMETER FILE) [Decimal Data]	The parameter file was damaged. Data stands for the damaged parameter file. 0:RC*, 1:RO*, 2:SV,3:SVM, 4:SC, 5:SD*, 6:CIO*, 7:FD*, 8:AP, 9:RS, 10:SE, 11:RMS*, 12:AMC*, 13:SVP*, 14:MF*,15:PCD* *:System paramete	• Initialize the parameter file damaged on maintenance mode. • Load the saved parameter file in the external memory unit.
0210	MEMORY ERROR (SYSTEM CONFIG-DATA)	The system configuration data informatio on setting system initialization was damaged.	Needs investigation. Consult a YASKAWA representative.
0220	MEMORY ERROR (JOB MNG DATA)	The job control data was damaged.	• Initialize the job on maintenance mode The whole job data is deleted. • Load the job saved on the external memory unit.
0230	MEMORY ERROR (LADDER PRG FILE)	The concurrent I/O ladder program was damaged.	• Initialize the ladder program on maintenance mode. • Load the ladder program saved on the external memory unit.
0300	VERIFY ERROR (SYSTEM CONFIG-DATA) [Decimal Data]	The system parameter was modified illegally.	Needs investigation. Consult a YASKAWA representative.
0310	VERIFY ERROR (CMOS MEMORY SIZE)	CMOS memory capacity on system setting was different than the current one.	Check the connection status of CMOS memory circuit board (XMM01) for expansion.

Alarm Message List

Alarm Number	Message	Cause	Remedy
0320	VERIFY ERROR (I/O MODULE [Decimal Data]	• The status of the I/O module on initializing system or modifying was different than the current. • The communication mode (16/17 bytes) does not coincide with the XIO01 due to replacement of the I/O module. Data stands for the I/O module. 1-15: I/O module connected with XCP01 circuit board 17-31:Contactor circuit board, speed detect circuit board connected with WRCA01 circuit board(#1 33-47:Contactor circuit board, speed detect circuit board connected with WRCA01 circuit board(#2 49-63:Contactor circuit board, speed detect circuit board connected with WRCA01 circuit board(#3 65-79:Contactor circuit board, speed detect circuit board connected with WRCA01 circuit board(#4 81-95:Contactor circuit board, speed detect circuit board connected with WRCA01 circuit board(#5 97-111:Contactor circuit board, speed detect circuit board connected with WRCA01 circuit board(#6 (Note) WRCA01 circuit board (# □) The setting value of rotary switch on the WRCA01 circuit board is □ -1)	• Check the I/O module is same as when it was initialized or modified. • Modify the I/O module on maintenance mode. • Verity the communication mode (16/17 bytes) of the new I/O module.
0330	VERIFY ERROR (APPLICATION)	The application on system setting was different than AP parameter.	Change the AP parameter to the correct value.
0340	VERIFY ERROR (SENSOR FUNCTION)	• The sensor function on system initializing was different than the function of the sen sor circuit board mounted now. • The sensor setting on system setting was different than SE parameter.	• Set the function of the sensor circuit board on maintenance mode again. • Change SE parameter for the correct value.

Alarm Message List

Alarm Number	Message	Cause	Remedy
0400	PARAMETER TRANSMISSION ERROR [Decimal Data]	• The connection of communication cable for servopack was not completed. • The connection of communication cable for servopack was not cut. • The connection of terminal connector is not completed. • The terminal connector is unusual. • The circuit board was out of order. (The terminal connector is equipped 1 for a system). Data stands for an error circuit board 50:WRCA01 circuit board (#1 51:WRCA01 circuit board (#2 52:WRCA01 circuit board (#3 53:WRCA01 circuit board (#4 54:WRCA01 circuit board (#5 55:WRCA01 circuit board (#6 (Note) WRCA01 circuit board (#□) The setting value of rotary switch on the WRCA01 circuit board is (□ -1)	• Check the connection of communication cable for servopack. (XCP01·CN05 - WRCA(#*)·CN10 cable, WRCA·CN10(#*) - WRCA·CN10(#* cable • Replace the communication connector for servopack. • Check the connection of the terminal connector (WRCA·CN10(#*)). • Replace the terminal connector. • Replace the circuit board.
0410	MODE CHANGE ERROR [Decimal Data]	An error occurred in process of change to normal operation mode. Data stands for an error circuit board 10:XCP02 circuit board (#1-0) 11:XCP02 circuit board (#1-1) 12:XCP02 circuit board (#1-2) 20:XCP02 circuit board (#2-0) 21:XCP02 circuit board (#2-1) 22:XCP02 circuit board (#2-2) (Note) XCP02 circuit board (# □ - ■) □:Slot NO. ■:0 → XCP02 circuit board (main) 1 → Sub-board1(connector CNSL side) 2 → Sub-board2(connector CNET side 50:WRCA01 board (#1) 51:WRCA01 board (#2) 52:WRCA01 board (#3) 53:WRCA01 board (#4) 54:WRCA01 board (#5) 55:WRCA01 board (#6) (Note) WRCA01 circuit board (# □) The setting value of rotary switch on WRCA01 circuit board is (□ -1)	<Data:10-21> • Insert the circuit board in the CPU rack fast. • Replace the circuit board. <Data:50-55> • Check the connection of communication cable for servopack. (XCP01·CN05 - WRCA(#*)·CN10 cable, WRCA·CN10(#*) - WRCA·CN10(#* cable • Replace the communication connector for servopack. • Check the connection of the terminal connector (WRCA·CN10(#*)). • Replace the terminal connector. • Replace the circuit board.
0500	SEGMENT PROC NOT READY	An error occurred in communication between XCP01 circuit board and WRCA01 circuit board.	• Turn the power off then back on. • If the error occurs again, contact your YASKAWA representative.
0900	WATCHDOG TIMER ERROR (XCP01) [Decimal Data]	An insertion error of the XCP01 circuit board or defective circuit board.	• Insert the circuit board in the CPU rack fast. • Replace the circuit board. • If the error occurs again, contact your YASKAWA representative.

Alarm Message List

Alarm Number	Message	Cause	Remedy
0901	WATCHDOG TIMER ERROR (XCP02#1) [Decimal Data]	An insertion error of the XCP02#1 circuit board or the circuit board failed.	• Insert the circuit board in the CPU rack or the connector on the circuit board fast. • Replace the circuit board • If the error occurs again, contact you YASKAWA representative.
0902	WATCHDOG TIMER ERROR (XCP02#2) [Decimal Data]	An insertion error of the XCP02#2 circuit board or defective circuit board.	• Insert the circuit board in the CPU rack or the connector on the circuit board fast. • Replace the circuit board. • If the error occurs again, contact you YASKAWA representative.
0910	CPU ERROR(XCP01) [Decimal Data]	An insertion error of the XCP01 circuit board or defective circuit board.	• Insert the circuit board in the CPU rack fast. • Replace the circuit board. • If the error occurs again, contact you YASKAWA representative.
0911	CPU ERROR (XCP02#1) [Decimal Data]	An insertion error of the XCP02#1 circuit board or defective circuit board.	• Insert the circuit board in the CPU rack or the connector on the circuit board fast. • Replace the circuit board. • If the error occurs again, contact you YASKAWA representative.
0912	CPU ERROR (XCP02#2) [Decimal Data]	An insertion error of the XCP02#2 circuit board or defective circuit board.	• Insert the circuit board in the CPU rack or the connector on the circuit board fast. • Replace the circuit board. • If the error occurs again, contact you YASKAWA representative.
0920	BUS ERROR (XCP01) [Decimal Data]	An insertion error of the XCP01 circuit board or defective circuit board.	• Insert the circuit board in the CPU rack fast. • Replace the circuit board. • If the error occurs again, contact you YASKAWA representative.
0921	BUS ERROR (XCP02#1) [Decimal Data]	An insertion error of the XCP02#1 circuit board or defective circuit board.	• Insert the circuit board in the CPU rack fast. • Replace the circuit board. • If the error occurs again, contact you YASKAWA representative.
0922	BUS ERROR (XCP02#2) [Decimal Data]	An insertion error of the XCP02#2 circuit board or defective circuit board.	• Insert the circuit board in the CPU rack or the connector on the circuit board fast. • Replace the circuit board • If the error occurs again, contact you YASKAWA representative.
0930	CPU HANG UP ERROR (XCP01) [Decimal Data]	An insertion error of the XCP01 circuit board or defective circuit board.	• Insert the circuit board in the CPU rack fast. • Replace the circuit board. • If the error occurs again, contact you YASKAWA representative.

Alarm Message List

Alarm Number	Message	Cause	Remedy
0931	CPU HANG UP ERROR (XCP02#1) [Decimal Data]	An insertion error of the XCP02#1 circuit board or defective circuit board.	• Insert the circuit board in the CPU rack or the connector on the circuit board fast. • Replace the circuit board. • If the error occurs again, contact your YASKAWA representative.
0932	CPU HANG UP ERROR (XCP02#2) [Decimal Data]	An insertion error of the XCP02#2 circuit board or defective circuit board.	• Insert the circuit board in the CPU rack or the connector on the circuit board fast. • Replace the circuit board. • If the error occurs again, contact your YASKAWA representative.
0940	WATCHDOG TIMER ERROR (WRCA#1 [Decimal Data]	An insertion error of theWRCA01#1 circuit board or defective circuit board.	• Insert the circuit board in the CPU rack or the connector on the circuit board fast. • Replace the circuit board • If the error occurs again, contact your YASKAWA representative.
0941	WATCHDOG TIMER ERROR (WRCA#2 [Decimal Data]	An insertion error of the WRCA01#2 circuit board or defective circuit board.	• Insert the circuit board in the CPU rack or the connector on the circuit board fast. • Replace the circuit board. • If the error occurs again, contact your YASKAWA representative.
0942	WATCHDOG TIMER ERROR (WRCA#3 [Decimal Data]	An insert error of the WRCA01#3 circuit board or defective circuit board.	• Insert the circuit board in the CPU rack or the connector on the circuit board fast. • Replace the circuit board. • If the error occurs again, contact your YASKAWA representative.
0943	WATCHDOG TIMER ERROR (WRCA#4 [Decimal Data]	An insertion error of the WRCA01#4 circuit board or defective circuit board.	• Insert the circuit board in the CPU rack or the connector on the circuit board fast. • Replace the circuit board. • If the error occurs again, contact your YASKAWA representative.
0944	WATCHDOG TIMER ERROR (WRCA#5 [Decimal Data]	An insertion error of the WRCA01#5 circuit board or defective circuit board.	• Insert the circuit board in the CPU rack or the connector on the circuit board fast. • Replace the circuit board. • If the error occurs again, contact your YASKAWA representative.
0945	WATCHDOG TIMER ERROR (WRCA#6 [Decimal Data]	An insertion error of the WRCA01#6 circuit board or defective circuit board.	• Insert the circuit board in the CPU rack or the connector on the circuit board fast. • Replace the circuit board. • If the error occurs again, contact your YASKAWA representative.
0950	CPU ERROR (WRCA#1 [Decimal Data]	An insertion error of the WRCA01#1 circuit board or defective circuit board.	• Insert the circuit board in the CPU rack or the connector on the circuit board fast. • Replace the circuit board. • If the error occurs again, contact your YASKAWA representative.

Alarm Message List

Alarm Number	Message	Cause	Remedy
0951	CPU ERROR (WRCA#2) [Decimal Data]	An insertion error of the WRCA0#21 circuit board or defective circuit board.	• Insert the circuit board in the CPU rack or the connector on the circuit board fast. • Replace the circuit board. • If the error occurs again, contact you YASKAWA representative.
0952	CPU ERROR (WRCA#3) [Decimal Data]	An insertion error of the WRCA01#3 circuit board or defective circuit board.	• Insert the circuit board in the CPU rack or the connector on the circuit board fast. • Replace the circuit board. • If the error occurs again, contact you YASKAWA representative.
0953	CPU ERROR (WRCA#4) [Decimal Data]	An insertion error of the WRCA01#4 circuit board or defective circuit board.	• Insert the circuit board in the CPU rack or the connector on the circuit board fast. • Replace the circuit board. • If the error occurs again, contact you YASKAWA representative.
0954	CPU ERROR (WRCA#5) [Decimal Data]	An insertion error of the WRCA01#5 circuit board or defective circuit board.	• Insert the circuit board in the CPU rack or the connector on the circuit board fast. • Replace the circuit board. • If the error occurs again, contact you YASKAWA representative.
0955	CPU ERROR (WRCA#6) [Decimal Data]	An insertion error of the WRCA01#6 circuit board or defective circuit board.	• Insert the circuit board in the CPU rack or the connector on the circuit board fast. • Replace the circuit board. • If the error occurs again, contact you YASKAWA representative.
0960	CPU HANG UP ERROR (WRCA#1) [Decimal Data]	An insertion error of the WRCA01#1 circuit board or defective circuit board.	• Insert the circuit board in the CPU rack or the connector on the circuit board fast. • Replace the circuit board. • If the error occurs again, contact you YASKAWA representative.
0961	CPU HANG UP ERROR (WRCA#2) [Decimal Data]	An insertion error of the WRCA01#2 circuit board or defective circuit board.	• Insert the circuit board in the CPU rack or the connector on the circuit board fast. • Replace the circuit board. • If the error occurs again, contact you YASKAWA representative.
0962	CPU HANG UP ERROR (WRCA#3) [Decimal Data]	An insertion error of the WRCA01#3 circuit board or defective circuit board.	• Insert the circuit board in the CPU rack or the connector on the circuit board fast. • Replace the circuit board. • If the error occurs again, contact you YASKAWA representative.
0963	CPU HANG UP ERROR (WRCA#4) [Decimal Data]	An insertion error of the WRCA01#4 circuit board or defective circuit board.	• Insert the circuit board in the CPU rack or the connector on the circuit board fast. • Replace the circuit board. • If the error occurs again, contact you YASKAWA representative.

Alarm Message List

Alarm Number	Message	Cause	Remedy
0964	CPU HANG UP ERROR (WRCA#5 [Decimal Data]	An insertion error of the WRCA01#5 circuit board or defective circuit board.	• Insert the circuit board in the CPU rack or the connector on the circuit board fast. • Replace the circuit board. • If the error occurs again, contact your YASKAWA representative.
0965	CPU HANG UP ERROR (WRCA#6 [Decimal Data]	An insertion error of the WRCA01#6 circuit board or defective circuit board.	• Insert the circuit board in the CPU rack or the connector on the circuit board fast. • Replace the circuit board. • If the error occurs again, contact your YASKAWA representative.
0999	NMI ERROR [Decimal Data]	NMI (interruption CPU signal of unknown origin) occurred because of the motion erro of hardware, circuit board and rack or con trol error of software.	• Insert the circuit board in the CPU rack or the connector on the circuit board fast. • Replace the circuit board. • If the error occurs again, contact your YASKAWA representative.
1000	ROM ERROR (XCP01)	The error was found by sum check of system program for the XCP01 circuit board.	Replace the XCP01 circuit board (ROM).
1001	ROM ERROR(WRCA01) [Decimal Data]	The error was found by sum check of system program for the XCP01 circuit board.	Replace the WRCA circuit board (ROM).
1002	ROM ERROR (XFC01)	The error was found by sum check of system program for the XFC01 circuit board.	Replace the XFC01 circuit board (ROM).
1003	ROM (XCP02	The error was found by sum check of system program for the XCP02 circuit board.	Replace the XCP02 circuit board (ROM).
1030	MEMORY ERROR (PARAMETER FILE) [Decimal Data]	The parameter file of CMOS memory was damaged. Data stands for the damaged parameter file. 0:RC*, 1:RO*, 2:SV, 3:SVM, 4:SC, 5:SD*, 6:CIO*, 7:FD*, 8:AP, 9:RS, 10:SE, 11:RMS*, 12:AMC*, 13:SVP*, 14:MF*, 15:PCD* *:System paramete	• Initialize the parameter file damaged on maintenance mode. • Load the saved parameter from the floppy disk and restore.
1031	MEMORY ERROR (MOTION1 [Decimal Data]	The saved each file on CMOS memory used by motion instruction was damaged.	• Initialize the file damaged on maintenance mode. • Load the saved file from the floppy disk and restore.
1032	MEMORY ERROR (MOTION2 [Decimal Data]	• The saved each file on XCP01 circuit board memory used by motion instruction was damaged. • An insertion error of the XCP01 circuit board or the circuit board failed.	• Turn the power off then back on. • Insert the XCP01 circuit board in CPU rack fast. • Replace the XCP01 circuit board. • If the error occurs again, contact your YASKAWA representative.
1050	SET-UP PROCESS ERROR (SYSCON) [Decimal Data]	The error occurred in the setup process of system when the main power was turned on. 1: The set up of motion instruction was not completed. The set up of the WRCA01, XCP02 circuit board was not completed.	• Turn the power off then back on. • If the error occurs again, contact your YASKAWA representative.

Alarm Message List

Alarm Number	Message	Cause	Remedy
1051	SETUP INITIALIZE ERROR (MOTION) [Decimal Data]	The error occurred in the setup process of motion instruction when the main power was turned on.	• Turn the power off then back on. • If the error occurs again, contact you YASKAWA representative.
1100	SYSTEM ERROR C: ☐ B: ☐ C: ☐ [Decimal Data]	The alarm of unknown origin was detected by noise and control error.	• Needs investigation. Consult a YASKAWA representative.
1101	SYSTEM ERROR (SYSTEM1) [Decimal Data]	The error occurred in the control check of system.	• Turn the power off then back on. • If the error occurs again, contact you YASKAWA representative.
1102	SYSTEM ERROR (SYSTEM2) [Decimal Data]	The error occurred in the control check of system.	• Turn the power off then back on. • If the error occurs again, contact you YASKAWA representative.
1103	SYSTEM ERROR (EVENT) [Decimal Data]	The error occurred in the event data check of system.	• If the error occurs again, contact you YASKAWA representative.
1104	SYSTEM ERROR (CIO) [Bit Pattern]	The error occurred in the I/O control check of system Data stands for the cause of alarm. 0001_0000:Communication error with I/O module or setting error of I/O module	• Check the connector, cable for transmis sion path of I/O signal(XCP01I/O contac-tor unit, I/O module) • Reset the I/O module on maintenance mode. • Replace the XCP01, I/O contactor unit, I/O module.
1105	SYSTEM ERROR (SERVO) [Decimal Data]	The error occurred in control check of th WACA01/WRCF01 circuit board.	• Turn the power off then back on. • If the error occurs again, contact you YASKAWA representative.
1106	SYSTEM ERROR (SPEED MONITOR) [Decimal Data]	The error occurred in control check of th XFC01 circuit board.	• Turn the power off then back on. • If the error occurs again, contact you YASKAWA representative.
1200	HIGH TEMPERA-TURE (IN CNTL BOX)	The temperature in the controller raised abnormally.	Check whether interior fan of controller is working or not.
1201	OVERRUN LIMIT SWITCH RELEASED	Overrun recovery switch was operated on playback.	• Don't operate the overrun recovery switch on playback. • It is thought that the overrun recovery switch is failed. Consult YASKAWA rep-resentative.
1202	FAULT [Decimal Data]	CPU motion impossibility caused by 0 divi-sion etc. Data stands for the factor of alarm. 1:Calculation 2:Floating point	• Turn the power off then back on. • If the error occurs again, contact you YASKAWA representative.
1203	SAFETY CIRCUIT ERROR (XCI01) [Binary Data]	The error occurred in the safe circuit pro-cessing of the XCI01 circuit board. 00000000_********: CPU1 error ********_00000000: CPU2 error *: Data of 0 or 1	• Turn the power off then back on. • Check the connection cable of the I/O contactor unit. • If the error occurs again, contact you Yaskawa representative.

Alarm Message List

Alarm Number	Message	Cause	Remedy
1300	SERVO CPU SYN CHRONIZING ERROR	The communication between the XCP01 circ board and the WRCA01 circuit board was abnormal. • The cable between the XCP01 circuit board and WRCA01 circuit board was defective. • The connection of the terminal connector was incomplete. • Defective XCP01 circuit board • Defective WRCA01 circuit board	• Check the connection of communication cable for servopack. (XCP01·CN05 - WRCA(#*)·CN10 cable, WRCA·CN10(#*) - WRCA·CN10(#* cable • Replace the communication cable for servopack. • Check the connection of the terminal connector (WRCA· CN10(#*)). • Replace the terminal connector. • Replace the XCP01 circuit board, WRCA01 circuit board.
1301	COMMUNICATION ERROR (SERVO) [Decimal Data]	The communication between the XCP01 circ board and the WRCA01 circuit board was abnormal. • The cable between the XCP01 circuit board and WRCA01 circuit board was defective. • The connection of the terminal connector was incomplete. • Defective XCP01 circuit board • Defective WRCA01 circuit board	• Check the connection of communication cable for servopack. (XCP01·CN05 - WRCA(#*)·CN10 cable, WRCA·CN10(#*) - WRCA·CN10(#* cable • Replace the communication cable for servopack. • Check the connection of the terminal connector (WRCA· CN10(#*)). • Replace the terminal connector. • Replace the XCP01 circuit board, WRCA01 circuit board. • If the error occurs again, contact your YASKAWA representative.
1302	COMMUNICATION ERROR (SERVO I/O) [Decimal Data]	The communication between WRCA01 circuit board and the contactor unit (for I/O, robot, external axis) was abnormal.	• Check the connection for communication cable between the WRCA01 circuit board and contactor unit. (WRCA01(#*)·CN20 - XIU01·CN21 cable • Replace the WRCA01 circuit board. • Replace the contactor unit. • If the error occurs again, contact your YASKAWA representative.
1303	ARITHMETIC ERROR (SERVO) [Decimal Data]	The error occurred on check of interior control for the WRCA circuit board.	Needs investigation. Consult a YASKAWA representative.
1304	EX-AXIS BOARD NOT INSTALLED	• The system included the external axis, but the external axis circuit board (WRCF0 board) was not installed. • The system did not include the external axis, but the system with external axis was set. • Defective WRCF01 circuit board • Defective WRCA01 circuit board	<The system with external axis> • Check the installation of the external axis circuit board(WRCF01 board). • If the WRCF01 circuit board is installed, replace it. <The system without external axis> • Check the system is not included external axis. • Execute the system configuration again on system without external axis.

Alarm Message List

Alarm Number	Message	Cause	Remedy
1305	POWER ON UNIT NOT INSTALLED [Bit Pattern]	• The contactor unit was set on system configuration, but the contactor unit was not installed. • The system was not installed contactor unit, but the system was set as though a contactor unit installed. • Defective contactor unit • Defective WRCA circuit board	<The system with external axis> • Check the installation of the external axis circuit board(WRCF01 board). • If the WRCF01 circuit board is installed, replace it. <The system without external axis> • Check the system is not included exter nal axis. • Execute the system configuration again on system without external axis.
1306	AMPLIFIER TYPE MISMATCH Robot/Statio [Axis Data]	• The type of amplifier displayed by axis data was different than the type set by system configuration. • The type of amplifier was not correct. • The type of amplifier was different than the type set by system configuration. • Defective amplifier • Defective WRCA01 circuit board	• Check the type of servopack displayed by axis data. <Error in robot axis> Check the type of servopack is same as described one on manual. If the type is not correct, replace it with correct servopack. <Error in external axis> Check the type of servopack set by system configuration is same as actual installed one. If set data by system configuration is correct, replace installed servopack with correct one. If set data by system configuration is not correct, set the correct system configuration. • If the error occurs again, replace WRCA01 circuit board.
1307	ENCORDER TYPE MISMATCH Robot/Statio [Axis Data]	The type of encoder displayed by axis data was different than the type set by system configuration. • The type of encoder was not correct. • The system configuration setting of encoder was not correct. • Defective encoder • Defective WRCA circuit board (Note) The encoder is accessories of motor, check the type of motor to check the type of encoder	• Check the type of motor displayed by axis data. <Error in robot axis> Check that the type of motor is same as the one described in the manual. If the type is not correct, replace it with the cor rect motor. <Error in external axis> Check that the type of motor set by system configuration is same as actual installed one. If the set data by syste configuration is correct, replace installe motor with correct one. If set data by sys tem configuration is not correct, set th correct system configuration. • If the error occurs again, replace WRCA01 circuit board.

Alarm Message List

Alarm Number	Message	Cause	Remedy
1308	OVER SPEED Robot/Station [Axis Data]	The motor speed displayed by axis data exceeded allowable max speed. • The wiring of UVW wire of motor was not correct. • The type of motor was not correct. • The motor was moved by external power. • Defective WRCA01, WRCF01 circuit board • Defective motor (encoder)	• Check the connection of motor. • Check the robot motion on alarm and check whether external power is operated or not. • Check the connection of UVW wire of motor again. If the error is found, alter the connection. • Check the reoccurrence by reducing the teaching speed on alarm.There is a possibility that R,B,T axis move at a fast speed on liner interpolation according to teaching position. In this case, alter the teaching. <Error in robot axis> Check that the type of motor is same as the one described in the manual. If the type is not correct, replace it with the correct motor. <Error in external axis> Check that the type of motor set by system configuration is same as actual installed one. If the set data by syste configuration is correct, replace installed motor with correct one. If set data by system configuration is not correct, set the correct system configuration. • If the erro occurs again, replace WRC01 and/or WRCF01 circuit board.

Alarm Message List

Alarm Number	Message	Cause	Remedy
1309	OVERLOAD (CONTINU Robot/Statio [Axis Data]	The motor torque displayed by axis data exceeded rated torque for a long time (a fe seconds - a few minutes). It may have burned the motor. • The wrong wiring, the breaking of the UVW wire for the motor • The type of motor was not correct. • The motor was moved by external power. • It interfered with an outside equipment. • Defective WRCA01, WRCF01 circuit board • Defective amplifier • Defective motor (encoder)	• Check whether the robot interferes with the outside equipment. If the robot inter feres, remove the cause. • Check the connection of UVW wire of motor again. And check the breaking of the wire. • There is a possibility the robot moves by extra load. Check the motion status of robot again and reduce the teaching speed. Then confirm the reoccurrence. <Error in robot axis> Check that the type of motor is the same as the one described in the manual. If the type is not correct, replace it with the correct motor. <Error in external axis> Check that the type of motor set by system configuration is the same as the actual installed one. If set data by system configuration is correct, replace installed motor with correct one. If set data by system configuration is not cor rect, set the correct system configuration. • If the error occurs again, replace WRCA01 and/or WRCF01 circuit board. • Replace the amplifier, motor for axis where the error occurred.

Alarm Message List

Alarm Number	Message	Cause	Remedy
1310	OVERLOAD (MOMENT) Robot/Station [Axis Data]	The motor torque displayed by axis data exceeded rated torque for a long time. It may have burned the motor. • The wrong wiring, the breaking of the wire UVW wire for the motor • The type of motor was not correct. • The motor was moved by external power. • It interfered with an outside equipment. • Defective WRCA01, WRCF01 circuit board • Defective amplifier • Defective motor (encoder)	• Check whether the robot interferes with the outside equipment. If the robot interferes, remove the cause. • Check the connection of UVW wire of motor again. And check the breaking of the wire. • There is a possibility the robot moves by extra load. Check the motion status of robot again and reduce the teaching speed. Then confirm the reoccurrence. <Error in robot axis> Check that the type of motor is the same as the one described in the manual. If the type is not correct, replace it with th correct motor. <Error in external axis> Check that the type of motor set by system configuration is the same as the actual installed one. If set data by system configuration is correct, replace installed motor with correct one. If set data by system configuration is not correct, set the correct system configuration. • If the error occurs again, replace WRCA01 and/or WRCF01 circuit board. • Replace the amplifier, motor for axis where the error occurred.

Alarm Message List

Alarm Number	Message	Cause	Remedy
1311	AMPLIFIER OVER-LOAD (CONTINU Robot/Statio [Axis Data]	The servopack (amplifier) current displayed by axis data exceeded rated current for a long time (a few seconds - a few minutes). It may have burned the servopack. • The wrong wiring, the breaking of the UVW wire for the motor • The type of motor was not correct. • The motor was moved by external power. • It interfered with an outside equipment. • Defective WRCA01, WRCF01 circuit board • Defective amplifier • Defective motor (encoder)	• Check whether the robot interferes with the outside equipment. If the robot inter feres, remove the cause. • Check the connection of UVW wire of motor again. And check the breaking of the wire. • There is a possibility the robot moves by extra load. Check the motion status of robot again and reduce the teaching speed. Then confirm the reoccurrence. <Error in robot axis> Check that the type of motor is the same as the one described in the manual. If the type is not correct, replace it with the correct motor. <Error in external axis> Check that the type of motor set by system configuration is the same as the actual installed one. If set data by system configuration is correct, replace installed motor with correct one. If set data by system configuration is not cor rect, set the correct system configuration. • If the error occurs again, replace WRCA01 and/or WRCF01 circuit board. • Replace the amplifier, motor for axis where the error occurred.

Alarm Message List

Alarm Number	Message	Cause	Remedy
1312	AMPLIFIER OVER-LOAD (MOMENT) Robot/Station [Axis Data]	The servopack (amplifier) current displayed by axis data exceeded rated current for a long time (a few seconds - a few minutes). It may have burned the servopack. • The wrong wiring, the breaking of the UVW wire for the motor • The type of motor was not correct. • The motor was moved by external power. • It interfered with an outside equipment. • Defective WRCA01, WRCF01 circuit board • Defective amplifier • Defective motor (encoder)	• Check whether the robot interferes with the outside equipment. If the robot interferes, remove the cause. • Check the connection of UVW wire of motor again. And check the breaking of the wire. • There is a possibility the robot moves by extra load. Check the motion status of robot again and reduce the teaching speed. Then confirm the reoccurrence. <Error in robot axis> Check that the type of motor is the same as the one described in the manual. If the type is not correct, replace it with th correct motor. <Error in external axis> Check that the type of motor set by system configuration is the same as the actual installed one. If set data by system configuration is correct, replace installed motor with correct one. If set data by system configuration is not correct, set the correct system configuration. • If the error occurs again, replace WRCA01 and/or WRCF01 circuit board. • Replace the amplifier, motor for axis where the error occurred.
1313	MOTOR ERROR Robot/Station [Axis Data]	The motor was driven recklessly. This erro occurred when the motor moved in reverse for the forward instruction. • Incorrect wiring of the UVW wire for the motor • The type of motor was not correct. • Defective WRCA01, WRCF01 circuit board	• Check the connection of UVW wire of motor again. <Error in robot axis> Check that the type of motor is same as the one described in the manual. If the type is not correct, replace it with correct motor. <Error in external axis> Check that the type of motor set by system configuration is same as actual installed one. If set data by system con figuration is correct, replace installed motor with correct one. If set data by system configuration is not correct, set the correct system configuration. • If the error occurs again, replace WRCA01 and/or WRCF01 circuit board.

Alarm Message List

Alarm Number	Message	Cause	Remedy
1314	SERVO TRACKING ERROR Robot/Statio [Axis Data]	The servo deflection of the axis displayed by axis data became excessive, the robot was shifted from instructed motion position or tracks more than tolerance and operated • The wrong wiring, the breaking of the wire of UVW wire for the motor • The type of motor was not correct. • The motor was moved by external power. • It interfered with an outside equipment. • Defective WRCA01, WRCF01 circuit board • Defective amplifier • Defective motor (encoder)	• Check whether the robot interferes with the outside equipment. If the robot inter feres, remove the cause. • Check the connection of UVW wire of motor again. And check the breaking of the wire. • There is a possibility the robot moves by extra load. Check the motion status of robot again and reduce the teaching speed. Then confirm the reoccurrence. <Error in robot axis> Check that the type of motor is the same as the one described in the manual. If the type is not correct, replace it with the correct motor. <Error in external axis> Check that the type of motor set by system configuration is the same as the actual installed one. If set data by system configuration is correct, replace installed motor with correct one. If set data by system configuration is not cor rect, set the correct system configuration. • If the error occurs again, replace WRCA01 and/or WRCF01 circuit board. • Replace the amplifier, motor for axis where the error occurred.
1315	POSITION ERROR Robot/Statio [Axis Data]	The number of pulses generated by one rotation of the motor was not a regulated pulse numbers. There is a possibility the position was shifted. (But, if this alarm occurred simultaneously with the alar related to the encoder, it was thought this alarm accompanied the encoder alarm.) • Noise of outside equipment • Defective WRCA01, WRCF01 circuit board • Down of the power supply voltage for the encoder • Defective motor (encoder)	• Check whether there is a equipment generating loud noise. • Check the ground of controller is correct. • When the error occurred at external axis, set the ferrite core on the encoder cable for noise measure. • If the error occurs again, replace WRCA01 and/or WRCF01 circuit board. • Replace the motor for axis occurred the error.
1316	BROKEN PG LINE Robot/Statio [Axis Data]	The break of the signal wire from encode (But, this alarm may accompany the position error alarm, the alarm related to the encoder.) • Noise of outside equipment • Defective WRCA01, WRCF01 circuit board • Decrease of the power supply voltage for the encoder • Defective motor (encoder)	• Check the conduction of cable from the WRCA01, WRCF circuit board to the motor (encoder). • Check whether there is equipment generating loud noise. • Check the grounding of controller is correct. • If the error occurs again, replace WRCA01 and/or WRCF01 circuit board. • Replace the motor for the axis where the error occurred.

Alarm Message List

Alarm Number	Message	Cause	Remedy
1317	SPEED WATCHER BOARD ERROR	The error occurred in the speed detective circuit board. • Defective speed detective circuit board • Defective WRCA circuit board	• Turn the power off then back on. • If the error occurs again, replace the speed detective circuit board and WRCA01 circuit board.
1318	OVERVOLTAGE (CONVERTER) [Bit Pattern]	The power supply voltage of direct current supplied to the amplifier of servopack exceeded 420V. • The primary power supply voltage was too high.(220V,+10%) • It was too much load. • Defective converte • Defective WRCA01 circuit board	• Check the primary power supply (220V, +10%). • Lower the teaching speed of the fore and aft steps for alarm occurrence step about 30% and check the reoccurrence. If th alarm doesn't reoccur, alter the load. • If the error occurs again, replace the WRCA01 circuit board and the converter.
1319	GROUND FAUL Robot/Station [Axis Data]	One of U,V,W wires of the motor displayed on axis data was grounded at least. • Defective the motor • Ground fault of the motor, lead wire • Defective WRCA01, WRCF01 circuit board • Defective amplifier	This alarm does not occur by turning off the controlled power supply. But never fail to turn on the servo power supply after checking the motor grounding. There is a possibility the servopack is damaged when the servo turn-on and off is repeat ing ground fault status. • Check the connection ofthe U,V,W,E wires of motor again. • Remove the U,V,W,E wires of the motor from the terminal of the controller an check the conduction of U-E, V-E, W-E. If the wires are conducted, it's abnormal. • In case an error is found by the above check, remove the connector of the motor side and check again. If the wires are conducted, it is thought to be a defective lead wire. Specify the error point and replace the lead wire. • If the error is not caused by the lead wire, it is thought to be a defective motor. • If the error occurs again, replace the WRCA01 and/or WRCF01 circuit board. • Replace the amplifier, motor for the axis where the error occurred.
1320	OPEN PHASE (CONVERTER) [Bit Pattern]	Any of the three-phase current for primary side power supply of servopack was open-phase. • The wrong wiring of the primary side power supply connection. • The decrease of the primary side powe supply voltage(170V or less) • Defective WRCA01, WRCF01 circuit board • Defective converte	• Check the connection of the primary side wiring R,S,T wires of servopack. • Check that the power supply voltage is more than 170V. • If the erro occurs again, replace the WRCA01,WRCF01 circuit board. • Replace the converter for the axis where the error occurred.

Alarm Message List

Alarm Number	Message	Cause	Remedy
1321	OVERCURRENT (AMP) Robot/Statio [Axis Data]	One of the U,V,W wires of the motor displayed on the axis data was grounded at least. • Defective motor • Ground fault of the motor, lead wire • Defective WRCA01, WRCF01 circuit board • Defective amplifier • Overheating of amplifier	This alarm does not occur by turning off the controlled power supply. But never fail to turn on the servo power supply after checking the motor grounding. There is a possibility the servopack is damaged when the servo turn-on and off is repeating ground fault status. • Check the connection of the U,V,W,E wires of motor again. • Remove the U,V,W,E wires of the motor from the terminal of the controller and check the conduction of U-E, V-E, W-E. If the wires are conducted, it's abnormal. • In case an error is found by the above check, remove the connector of the motor side and check again. If the wires are conducted, it is thought to be a defective lead wire. Specify the error point and replace the lead wire. • If the error is not caused by the lead wire, it is thought to be a defective motor. • If the error occurs agai , replace the WRCA01 and/or WRCF01 circuit board. • Replace the amplifier, motor for the axis where the error occurred.
1322	REGENERATIVE TROUBLE (CONVERTER) [Bit Pattern]	Because the resurrection energy on reducing the motor speed was too high, the resurrection circuit board didn't work. • The load installed on robot was too heavy. • The primary side power supply voltag was too high.(242V or more) • Defective converter • Defective WRCA01, WRCF01 circuit board	• Check the load again. Lower the teaching speed of the fore and aft steps for alarm occurrence step about 30% and check the reoccurrence. If the alarm doesn't reoccur, alter the load. • Check the primary power supply(220V, +10%). • If the error occurs again, replace the WRCA01, WRCF01 circuit board. • Replace the converter for the axis where the error occurred.
1323	INPUT POWER OVER VOLTAGE (CONV) [Bit Pattern]	The primary side power supply voltage of servopack was too high.(242V or more)	• Check the primary power supply(220V, +10%). • If the error occurs again, replace the WRCA01 circuit board. • Replace the converter for the axis where the error occurred.
1324	TEMPERATURE ERROR (CONVERTER) [Bit Pattern]	The temperature of servopack (converter was too high.	• Check whether the ambient temperatur is too high or not. • Check the primary power supply(220V, +10%). • If the error occurs again, replace the WRCA01 circuit board. • Replace the converter for the axis where the error occurred.

Alarm Message List

Alarm Number	Message	Cause	Remedy
1325	COMMUNICATION ERROR (ENCODER) Robot/Station [Axis Data]	The communication error between the encoder and the WRCA01 circuit board. • The wrong wiring of the encoder wire • The type of motor was not correct. • Defective WRCA01 circuit board • Defective encoder	• Check the connection of the encoder displayed on axis data. • Check whether there is equipment generating big noise around or not. • Check the ground of controller is correct. <Error in robot axis> Check the type of motor is same as described one on manual. If the type is not correct, replace it with correct motor. <Error in external axis> Check the type of motor set by system configuration is same as actual installed one. If set data by system configuratio is correct, replace installed motor with correct one. If set data by system configuration is not correct, set the correct system configuration. • If the error occurs again, replace the WRCA01 circuit board.
1326	DEFECTIVE ENCODER ABSO LUTE DATA Robot/Station [Axis Data]	The error occured in the position detect circuit board of encoder.	• Turn the power off then back on. • If the error occurs again, replace the motor(encoder for the axis where the error occurred.
1327	ENCODER OVER SPEED Robot/Station [Axis Data]	• The control power supply was turned on when the encoder was rotating(400rpm o more). Turning on the control power supply can not be done when the motor is rotat ing. • The no brake axes, R,B,T axis for SK6, freely fell when the servo power supply was turned off by emergency stop. When the power supply was turned back on this status, this alarm occurred. • In case this alarm occurred in a stop state, it is thought that the encoder caused the error.	• Check the timing of turning on the control power supply. • If the error occurs when the control power supply is turned in a stopped state, replace the motor (encoder) displayed on axis data.
1328	DEFECTIVE SERIAL ENCODER Robot/Station [Axis Data]	The internal parameter of the serial encode became abnormal. It is thought to be an error of the encoder.	Turn the power off then back on. If the phenomenon occurs again after repeating this operation several times, replace the motor (encoder) for the axis where the error occurred.
1329	DEFECTIVE SERIAL ENCODER COM-MAND Robot/Station [Axis Data]	When the encoder backup error occurred, normally the controller automatically resets the data of the encoder. But, this was the case there was no response of the reset completion from the encoder. It is thought that the encoder was abnormal.	Turn the power off then back on. If the phenomenon occurs again after repeating this operation several times, replace the motor (encoder) for the axis where the error occurred.
1330	MICRO PROGRAM TRANSMIT ERROR Robot/Station [Axis Data]	Defective WRCA01 circuit board	Turn the power off then back on. If the phenomenon occurs again after repeating this operation several times, replace the WRCA01 circuit board for the axis where the error occurred.

Alarm Message List

Alarm Number	Message	Cause	Remedy
1331	CURRENT FEED-BACK ERROR (U PHASE) Robot/Statio [Axis Data]	When the phase balance of the motor cur rent was automatically adjusted, the read U phase current value was abnormal. • Defective WRCA01 circuit board • Defective amplifier	Turn the power off then back on. If the phenomenon occurs again after repeating this operation several times, replace the WRCA01 circuit board, amplifier for the axis where the error occurred.
1332	CURRENT FEED-BACK ERROR (V PHASE) Robot/Statio [Axis Data]	When the phase balance of the motor cur rent was automatically adjusted, the read V phase current value was abnormal. • Defective WRCA01 circuit board • Defective amplifier	Turn the power off then back on. If the phenomenon occurs again after repeating this operation several times, replace the WRCA01 circuit board, amplifier for axis the error occurred.
1335	ENCODER NOT RESET Robot/Statio [Axis Data]	Reset was not completed though encoder backup error reset was requested. It may be possible that the battery is not connected with the encoder.	• Connect the battery with the encoder. Contact your YASKAWA representative because the breakdown of the encoder is thought when the alarm occurs again even if the battery is connected.
1336	XFC01 NOT INSTALLED	The speed monitoring board (XFC01) is not mounted although it has been specified.	Mount the speed monitoring board (XFC01).
1337	SPEED MONITOR LEVEL NOT SAME	The error occurred in the speed monitoring level signal (duplicated signal check).	• Check the connection cables of the I/O contactor unit. • Replace the WRCA01 board.
1338	SPEED MONITOR LEVEL ERROR	The error occurred in the speed monitoring level signal (signal error).	• Check the connection cables of the I/O contactor unit. • Replace the WRCA01 board.
1339	SPEED MONITOR LEVEL ERR (XFC01	The error occurred in the speed monitoring level signal. • Disconnected cable between the I/O con-tactor unit and the XFC01 circuit boar • Disconnected cable between the I/O con-tactor unit and the XCI01 circuit board • Defective I/O contactor unit • Defective XFC01 circuit board	• Check the cable connection between the I/O contactor unit and the XFC01 circuit board. • Check the cable connection between the I/O contactor unit and the XCI01 circuit board. • Replace the I/O contactor unit and the XFC01 circuit board. • If the error occurs again, contact you YASKAWA representative.
1340	BROKEN SPEE MONITOR LINE	The speed monitoring command cable is disconnected.	• Check the connection cable of the I/O contactor unit. • Replace the WRCA01 board.
1341	BROKEN SPEE MONITOR LINE (XFC01)	The error occurred in the speed monitoring level signal. • Disconnected cable between the I/O con-tactor unit and the XFC01 circuit boar • Disconnected cable between the I/O con-tactor unit and the XCI01 circuit board • Defective I/O contactor unit • Defective XFC01 circuit board	• Check the cable connection between the I/O contactor unit and the XFC01 circuit board. • Check the cable connection between the I/O contactor unit and the XCI01 circuit board. • Replace the I/O contactor unit and the XFC01 circuit board. • If the error occurs again, contact you YASKAWA representative.

Alarm Message List

Alarm Number	Message	Cause	Remedy
1342	OVER SPEED (XFC01) Robot/Station [Axis Data]	The motor speed displayed in the axis data exceeded the allowable maximum motor speed. • Improper wiring of motor lines U, V and W. • Wrong type of motor was used. • Motor was moved by an external force. • Defective XFC01 circuit board • Defective motor (encoder)	• Check the motor wiring. • Check the robot movement when the alarm occurred to make sure that no external force has been applied. • Check the wiring of motor lines U, V and W. • Reduce the teaching speed from the speed when the alarm occurred to check if the same error will occur. With some taught postures, the R-, B-, or T-axis may operate at a high speed during linear interpolation. In this case, review the teaching. <Error in robot axis> Check that the type of motor is same as the one described in the manual. If the type is not correct, replace it with the correct motor. <Error in external axis> Check that the type of motor set by system configuration is same as actual installed one. If the set data by syste configuration is correct, replace installed motor with correct one. If set data by system configuration is not correct, set the correct system configuration. • If the error occurs again, replace the XFC01 circuit board.
1343	COMMUNICATION ERROR (XFC01) Robot/Station [Axis Data]	The communication error occurred between the WRCA01 and the XFC01 circuit board. • Faulty connection between the WRCA01 board and the XFC01 circuit board. • Defective WRCA01 boar • Defective XFC01 circuit board	• Check the connection of the WRCA01 board and the XFC01 circuit board. • Replace the WRCA01 board and the XFC01 circuit board. • If the error occurs again, contact your YASKAWA representative.

Alarm Message List

Alarm Number	Message	Cause	Remedy
1344	COMMUNICATION ERR (ENCODER) (XFC01) Robot/Statio [Axis Data]	The communication error occurred between the encoder and the XFC01 circuit board. • Improper wiring of encoder cables • Noise from external devices • Incorrect motor type • Defective XFC01 circuit board • Defective encoder	• Check the encoder connection displayed in the axis data. • Check that there is no device generating excessive noise. • Check that the grounding of the control panel is correct. <Error in robot axis> Check that the type of motor is same as the one described in the manual. If the type is not correct, replace it with the correct motor. <Error in external axis> Check that the type of motor set by sys tem configuration is same as actual installed one. If the set data by system configuration is correct, replace installed motor with correct one. If set data by system configuration is not correct, set the correct system configuration. • If the error occurs again, replace the XFC01 circuit board.
4000	MEMORY ERROR (TOOL FILE) [Decimal Data]	The tool file of CMOS memory was dam aged. The data stands for the file No.	Initialize the tool file in the maintenance mode. Load the saved tool file in the external memory unit and restore.
4001	MEMORY ERROR (USER COORD FILE)	The user coordinates file of CMOS memory was damaged. The data stands for the file No.	Initialize the user coordinates file in the maintenance mode. Load the saved user coordinates file in the external memory unit and restore.
4002	MEMORY ERROR (SV MON SIGNAL FILE)	The servo monitor signal file of CMOS memory was damaged.	Initialize the servo monitor signal file in the maintenance mode. Load the saved servo monitor signal file in the external memory unit and restore.
4003	MEMORY ERROR (WEAVING FILE)	The weaving condition file of CMOS mem-ory was damaged.	Initialize the weaving condition file in the maintenance mode. Load the saved weaving condition file in the external memory unit and restore.
4004	MEMORY ERROR(HOME POS FILE)	The home position calibration file of CMOS memory was damaged.	Reset the home position calibration (abso lute data) after reset the alarm. Load the home position calibration file (absolute data) in the external memory unit and restore.
4005	MEMORY ERROR (SPEC POINT DATA)	The specified point file of CMOS memory was damaged.	Load the specified point file in the external memory unit and restore.
4006	MEMORY ERROR (WELDER COND FILE) [Decimal Data]	The welder condition data file of CMOS memory was damaged. The data stands for the file No.	Initialize the welder condition data file in the maintenance mode. Load the saved welder condition data file in the external memory unit and restore.
4007	MEMORY ERR (ARC START COND FILE) [Decimal Data]	The arc start condition file of CMOS mem-ory was damaged. The data stands for the file No.	Initialize the arc start condition file in the maintenance mode. Load the saved arc start condition file in the external memory unit and restore.

Alarm Message List

Alarm Number	Message	Cause	Remedy
4008	MEMORY ERROR (ARC END COND FILE) [Decimal Data]	The arc end condition file of CMOS memory was damaged. The data stands for the file No.	Initialize the arc end condition file in the maintenance mode. Load the saved arc end condition file in the external memory unit and restore.
4009	MEMORY ERROR (ARC AUX COND FILE) [Decimal Data]	The welding condition assistance file of CMOS memory was damaged. The data stands for the file No.	Initialize the welding condition assistanc file in the maintenance mode. Load the saved welding condition assistance file in the external memory unit and restore.
4010	MEMORY ERROR (COMARC COND FILE) [Decimal Data]	The COM-ARC condition file of CMOS memory was damaged. The data stands for the file No.	Initialize the COM-ARC condition file in the maintenance mode. Load the saved COM-ARC condition file in the external memory unit and restore.
4012	MEMORY ERROR (LINK SERVOFLOAT [Decimal Data]	The link servo float condition file of CMOS memory was damaged. The data stands for the file No.	Initialize the link servo float condition file in the maintenance mode. Load the saved link servo float condition file in the external memory unit and restore.
4013	MEMORY ERROR (LINEAR SERVOFLOAT [Decimal Data]	The linear servo float condition file of CMOS memory was damaged. The data stands for the file No.	Initialize the linear servo float condition file in the maintenance mode. Load the saved linear servo float condition file in the external memory unit and restore.
4014	MEMORY ERROR (ROBOT CALIB FILE) [Decimal Data]	The robot calibration file of CMOS memory was damaged. The data stands for the file No.	Initialize the robot calibration file in the maintenance mode. Load the saved robot calibration file in the external memory unit and restore.
4017	MEMORY ERROR (WELDER USER-DEF FILE) [Decimal Data]	The welder user definition file of CMOS memory was damaged. The data stands for the file No.	Initialize the welder user definition file in the maintenance mode. Load the saved welder user definition file in the external memory unit and restore.
4018	MEMORY ERR (LADDER PRG FILE) [Decimal Data]	The ladder program file of CMOS memory was damaged.	Initialize the ladder program file in the maintenance mode. Load the saved ladder program file in the external memory unit and restore.
4020	MEMORY ERROR (OPERATION ORI-GIN FILE) [Decimal Data]	The operation origin file of CMOS memory was damaged. The data stands for the file No.	Initialize the operation origin file in the maintenance mode.
4021	MEMORY ERROR (CONVEYOR COND FILE) [Decimal Data]	The conveyor condition file of CMOS mem-ory was damaged. The data stands for the file No.	Initialize the conveyor condition file in the maintenance mode. Load the saved con-veyor condition file in the external memory unit and restore.
4028	MEMORY ERROR (SENSOR MON COND FILE) [Decimal Data]	The sensor monitoring condition file of CMOS memory was damaged. The data stands for the file No.	Initialize the sensor monitoring condition file in the maintenance mode. Load the saved sensor monitoring condition file in the external memory unit and restore.
4031	MEMORY ERROR (SPOT GUN COND FILE) [Decimal Data]	The spot gun condition data file of CMOS memory was damaged. The data stands for the file No.	Initialize the spot gun condition data file in the maintenance mode. Load the saved spot gun condition data file in the external memory unit and restore.
4032	MEM ERROR (SPOT WELDER COND FILE) [Decimal Data]	The spot welder condition data file of CMOS memory was damaged. The data stands for the file No.	Initialize the spot welder condition data file in the maintenance mode. Load the saved spot welder condition data file in the exter-nal memory unit and restore.

Alarm Message List

Alarm Number	Message	Cause	Remedy
4033	MEMORY ERROR (GUN PRESSURE FILE) [Decimal Data]	The servo gun pressure file of CMOS memory was damaged. The data stands for the file No.	Initialize the servo gun pressure file in the maintenance mode. Load the saved servo gun pressure file in the external memory unit and restore.
4034	MEMORY ERROR (ANTICIPATION OT FILE) [Decimal Data]	The anticipation output file of CMOS memory was damaged. The data stands for the file No.	Initialize the anticipation output file in the maintenance mode. Load the saved anticipation output file in the external memory unit and restore.
4035	MEMORY ERROR (ANTICIPATION OG FILE) [Decimal Data]	The anticipation output file of CMOS memory was damaged. The data stands for the file No.	Initialize the anticipation output file in the maintenance mode. Load the saved anticipation output file in the external memory unit and restore.
4036	MEMORY ERROR (WEARING FILE) [Decimal Data]	The wearing file of CMOS memory was damaged. The data stands for the file No.	Initialize the wearing file in the mainte nance mode. Load the saved wearing file in the external memory unit and restore.
4037	MEMORY ERROR (STROKE POSITION) [Decimal Data]	The stroke position file of CMOS memory was damaged. The data stands for the file No.	Initialize the stroke position file in the maintenance mode. Load the saved stroke position file in the external memory unit and restore.
4038	MEMORY ERROR (PRESSURE FILE) [Decimal Data]	The pressure file of CMOS memory was damaged. The data stands for the file No.	Initialize the pressure file in the maintenance mode. Load the saved pressure file in the external memory unit and restore
4039	MEMORY ERROR (FORM CUT FILE) [Decimal Data]	The form cut file of the CMOS memory was damaged. The data stands for the file No.	Initialize the form cut file in the maintenance mode. Load the saved formcut file in the external memory unit and restore
4040	MEMORY ERROR (SHOCK LEVEL FILE) [Decimal Data]	The shock level file of the CMOS memory was damaged. The data stands for the file No.	Initialize the shock level file in the maintenance mode. Load the saved shock level file in the external memory unit and restore.
4041	MEMORY ERROR (SPOT IO ALLOCTE FL) [Decimal Data]	The spot IO allocate file of the CMOS mem ory was damaged.	Initialize the spot IO allocate file in th maintenance mode. Load the saved spot IO allocate file in the external memory unit and restore.
4042	MEMORY ERROR (VISION FILE) [Decimal Data]	The vision file of the CMOS memory was damaged. The data stands for the file No.	Initialize the vision file in the maintenance mode. Load the saved vision file in the external memory unit and restore.
4043	MEMORY ERROR (VISION CALIBRATION) [Decimal Data]	The vision calibration of the CMOS memory was damaged. The data stands for the file No.	Initialize the vision calibration in the maintenance mode. Load the saved vision calibration in the external memory unit and restore.
4046	MEMORY ERROR (CONVEYOR CALIBRATION) [Decimal Data]	The conveyor calibration of the CMOS memory was damaged. The data stands for the file No.	Initialize the conveyor calibration in the maintenance mode. Load the saved conveyor calibration in the external memory unit and restore.
4100	OVERRUN IN ROBOT AXIS [Bit Pattern]	One of the robot axis overrun limit switches was operated.	Reset the overrun.
4101	OVERRUN IN EXTERNAL AXIS [Bit Pattern]	One of the external axis overrun limit switches was operated.	Reset the overrun.

Alarm Message List

Alarm Number	Message	Cause	Remedy
4102	SYSTEM DATA CHANGING [Decimal Data]	An attempt was made to change data which exerted the influence on the system and turned on the servo power supply. The data stands for the alarm factor. 1:System parameter change	Turn off the power once and back on.
4103	PARALLEL START INSTRUCTION ERROR [Decimal Data]	The error occurred in the independent control start operation. The data stands for alarm factor. 1:The sub task is being executed. The job was executed by instructed sub task, but another job was being started in the sub task. 2:The group axis is being used The job operated by other sub task used same group axis. 3:Multiple start of same job The job tried to start was executed by other sub task. 4:Master job unregistration Though master job was not registered, The attempt was made to execute PSTART SUB (job name omitted) 5:Synchronization instruction error When restarted by PSTART, synchronization instruction status of sub task under interruption was different than the status to restart. 6:The alarm is stopping The attempt was made to start sub task under stop by alarm.	1:Complete the sub task by PWAIT command. 2:Check that the job started and the timing of execution for start command again. 3:Check that the job started and the timing of execution for start command again. 4:Register the master job for sub task. 5:Check that the job started and the timing of execution for start command again. 6:Start after reset the alarm.
4104	WRONG EXECU TION OF LOAD INST [Decimal Data]	When the installation was executed, the error occurred in DCI function. The data stands for the alarm factor. Refer to the data transmission function manual for details.	Correct the error according to the data of the alarm factor after reset the alarm.
4105	WRONG EXECU TION OF SAVE INST [Decimal Data]	When the installation was executed, an error occurred in DCI function. The data stands for the alarm factor. Refer to the data transmission function manual for details.	Correct the error according to the data of the alarm factor after resetting the alarm.
4106	WRONG EXECU TION OF DELETE INST [Decimal Data]	When the installation was executed, the error occurred in DCI function. The data stands for the alarm factor. Refer to the data transmission function manual for details.	Correct the error according to the data of the alarm factor after resetting the alarm.
4107	OUT OF RANGE (ABSO DATA) Robot/Station [Axis Data]	The difference between the position of th power supply off and the power supply on exceeded tolerance for the robot / station.	Operate axis for robot /station to set the current value 0 position and check the original mark (arrow). If not matched, there is an error of PG system for the axis where the erro occurred. Please check.
4109	DC 24V POWER SUPPLY FAILURE	The external 24V power supply was not output.	• Check whether fuse for I/O contactor unit is cut or not. • Check the external 24V power supply. • Check the connection of communication cable for I/O module. (XCP0 ･CN01-XIU01･CN03 cable • If the error occurs again, contact your YASKAWA representative.

Alarm Message List

Alarm Number	Message	Cause	Remedy
4110	SHOCK SENSOR ACTION [Bit Pattern]	The shock sensor was operated.	Check the factor of shock sensor operation.
4111	BRAKE FUSE BLOWN [Bit Pattern]	The brake fuse was melted.	Replace the fuse.
4112	DATA SENDING ERROR [Decimal Data]	When the data transmission function was used, the error occurred. The data stands for the alarm factor. 1:Retryover of NAK 2:Retryover of timeout in timer A 3:Retryover of mutual response error	Correct the error according to the data of the alarm factor after resetting the alarm.
4113	DATA RECEIVING ERROR [Decimal Data]	When the data transmission function was used, the error occurred. The data stands for the alarm factor. 1:Reception timeout (timer A 2:Reception timeout (timer B 3:Heading length is short. 4:Heading length is long. 5:The heading No. error. 6:The text length exceeds 256 characters.	Correct the error according to the data of the alarm factor after resetting the alarm.
4114	TRANSMISSION SYSTEM BLOCK [Decimal Data]	When the data transmission function was used, the error occurred. The data stands for the alarm factor. 1:Overrun erro 2:Parity error 3:Flaming error 4:Transmission timeout (timer A) 5:Transmission timeout (timer B)	Correct the error according to the data of the alarm factor after resetting the alarm.
4116	TRANSMISSION SYSTEM ERROR [Decimal Data]	When the data transmission function was used, the error occurred. (Though the transmission procedure is correct, there is a reception that irrationality is caused in system. This error is mainly caused by PC breached the rule or abnormal communication.) The data stands for the alarm factor. 1:Received EOT when waiting ACK. 2:Received EOT when waiting ENQ. 3:Received EOT before last block reception 4:Received codes for except EOT after last block reception.	Correct the error according to the data of the alarm factor after resetting the alarm.
4117	SERVO POWER INPUT SIGNAL ERROR	It is thought that the CPU rack, circuit board was abnormal.	• Check whether the setting is the same as the system or not (robot and external axis) • If the error occurs again, contact you YASKAWA representative.
4119	FAN ERROR (IN CONTROL BOX)	The axis was instructed to turn servo on and off separately.	Make the condition so as to be able to turn servo on and off after resetting the alarm.
4120	IMPOSSIBLE TO DISCONNECT SERVO [Control Group]	Some axes were instructed and cannot turn the servo on or off.	After resetting the alarm, adjust the axes so that the servo power can be turned on and off.

Alarm Message List

Alarm Number	Message	Cause	Remedy
4121	COOLING FAN 1 ERROR [Binary Data]	The number of revolutions of cooling fan 1 connected to the contactor unit was reduced.	After resetting the alarm, move the manipulator in the teach mode to a safe place. Contact your Yaskawa representative to replace the cooling fan 1.
4122	COOLING FAN 2 ERROR [Binary Data]	The number of revolutions of cooling fan 2 connected to the contactor unit was reduced.	After resetting the alarm, move the manipulator in the teach mode to a safe place. Contact your Yaskawa representative to replace the cooling fan 2.
4123	COOLING FAN 3 ERROR [Binary Data]	The number of revolutions of cooling fan 3 connected to the contactor unit was reduced.	After resetting the alarm, move the manipulator in the teach mode to a safe place. Contact your Yaskawa representative to replace the cooling fan 3.
4200	SYSTEM ERROR (FILE DATA) [Decimal Data]	When access to the file data was executed, the error occurred. (File edition, Operation of external memory unit)	• Reset the alarm and repeat the operation. • Turn the power off then back on. • If the error occurs again, contact your YASKAWA representative.
4201	SYSTE ERROR(JOB) [Decimal Data]	When access to the job was executed, the error occurred. (During robot is being playback and operation)	• Reset the alarm and repeat the operation. • Turn the power off then back on. • If the error occurs again, contact your YASKAWA representative.
4202	SYSTE ERROR(JOB) [Decimal Data]	When access to the job was executed, the error occurred. (Job edition, Operation of external memory unit)	• Reset the alarm and repeat the operation. • Turn the power off then back on. • If the error occurs again, contact your YASKAWA representative.
4203	SYSTEM ERROR (POSITION DATA) [Bit Pattern]	When access to the position data was exe cuted, the error occurred. (During playback and operation)	• Reset the alarm and repeat the operation. • Turn the power off then back on. • If the error occurs again, contact your YASKAWA representative.
4204	SYSTEM ERROR (POSITION DATA) [Decimal Data]	When access to the position data was exe cuted, the error occurred. (Job/position variable edition, Operation of external memory unit)	• Reset the alarm and repeat the operation. • Turn the power off then back on. • If the error occurs again, contact your YASKAWA representative.
4206	SYSTEM ERROR (TRANSMISSION) [Decimal Data]	When the data transmission function was used, the error occurred. The error of internal procedure for transmission system.	Needs investigation. Consult a YASKAWA representative.
4207	SYSTE ERROR(MOTION) [Decimal Data]	The system error occurred in MOTION.	• Reset the alarm and repeat the operation. • Turn the power off then back on. • If the error occurs again, contact your YASKAWA representative.

Alarm Message List

Alarm Number	Message	Cause	Remedy
4208	SYSTEM ERROR (ARITH) [Decimal Data]	The system error occurred in ARITH.	• Reset the alarm and repeat the operation. • Turn the power off then back on. • If the error occurs again, contact you YASKAWA representative.
4209	OFFLINE SYSTE ERROR (ARITH) [Decimal Data]	The system error occurred in ARITH offline.	• Reset the alarm and repeat the operation. • Turn the power off then back on. • If the error occurs again, contact you YASKAWA representative.
4220	SERVO POWER OFF FOR JOB [Control Group]	The servo power supply was not turned on for the job group axis which was to be operated.	Intercept the servo power supply once and turn on the servo power supply to the group axis to be operated.
4221	SERVO POWER OFF FOR JOB [Control Group]	The servo power supply was not turned on for the job group axis which was to be operated.	Intercept the servo power supply once and turn on the servo power supply to the group axis to be operated.
4222	SAFE CIRCUIT SIG NOT SAME (XCI01) [Binary Data]	The error occurred in the safe circuit signal (I/O contactor unit). (Check the XCI01 circuit board duplication signal.)	• Check the safe circuit signal wiring of the cables connected to the I/O contactor unit. • Replace the I/O contactor unit.
4223	SAFE CIRCUIT SIGNAL NOT SAME (SV) [Decimal Data]	The error occurred in the safe circuit signal (I/O contactor unit). (Check the WRCA01 board duplication signal.)	• Check the safe circuit signal wiring of the cables connected to the I/O contactor unit. • Replace the I/O contactor unit.
4300	VERIFY ERROR (SERVO PARAM TER) [Decimal Data]]	A mistake was found in the paramete related to servo control.	Needs investigation. Consult a YASKAWA representative.
4301	CONTACTOR ERROR [Bit Pattern]	• The contactor of the contactor unit was not turned ON at servo ON. • While turning servo ON, the signal fro the contactor was intercepted. • The contactor signal was not intercepted at servo OFF (at emergency stop). • While turning servo OFF (at emergency stop), the contactor signal was turned ON. Reasons are as follows: • Defective contactor unit • Defective WRCA01 circuit board	• Turn servo ON again after resetting the alarm. • If the error occurs again, replace the contactor unit, WRCA01 circuit board.
4302	BRAKE CIRCUIT ERROR [Bit Pattern]	• The brake relay signal unit was not turned ON at servo ON. • While turning servo ON, the brake relay signal was intercepted. • The brake relay signal was not intercepted at servo OFF (at emergency stop). • While turning servo OFF (at emergency stop), the brake relay signal was turned ON. Reasons are as follows: • Defective contactor unit • Defective WRCA01 circuit board	• Reset the alarm and turn servo ON again. • If the error occurs again, replace the contactor unit, WRCA01 circuit board.

Alarm Message List

Alarm Number	Message	Cause	Remedy
4303	CONVERTER READY SIGNAL ERROR [Bit Pattern]	• There was no response (servo ready sig nal) of charge completion from convertor at servo ON. • While turning servo ON, the servo ready signal was intercepted. • The servo ready signal was not inter-cepted at servo OFF (at emergency stop). • While turning servo OFF (at emergency stop), the servo ready signal was turned ON. Reasons are as follows: • Primary side power supply voltage was too low. • Because the power supply cable of pri-mary side was too fine or its cable was too long, the voltage drop occurred at servo ON. • Defective WRCA01,WRCF01 circuit boar • Defective converte	• Reset the alarm and turn servo ON again. • Check the primary power supply voltage (220V+10%). • If the error occurs again, replace the WRCA01 circuit board, the converter.
4304	CONVERTER INPUT POWER ERROR [Bit Pattern]	• There was no response (ready 1 signal) of primary power supply input from convertor at servo ON. • While turning servo ON, the ready 1 signal was intercepted. • The ready 1 signal was not intercepted at servo OFF (at emergency stop). • While turning servo OFF (at emergency stop), the ready 1 signal was turned ON. Reasons are as follows: • Mistaken wiring of connection for primary side power supply. • The drop of primary side power supply (less than170V). • Because the power supply cable of pri-mary side was too fine or its cable was too long, the voltage drop occurred at servo ON. • Defective WRCA01,WRCF01 circuit boar • Defective converte	• Check the connection for primary side wiring R,S,T, wire. • Check that the power supply voltage is more than 170V. • If the error occurs again, replace the WRCA01 circuit board, WRCF01 circuit board, the converter.

Alarm Message List

Alarm Number	Message	Cause	Remedy
4305	CONVERTER CIRCUIT CHARGE ERROR [Bit Pattern]	• There was no response (ready 2 signal) of charge completed from convertor at servo ON. • While turning servo ON, the ready 2 signal was intercepted. • The ready 2 signal was not intercepted at servo OFF (at emergency stop). • While turning servo OFF (at emergency stop), the ready 2 signal was turned ON. Reasons are as follows: • Mistaken wiring of connection for primary side power supply. • The drop of primary side power supply (less than170V). • Because the power supply cable of primary side was too fine or its cable was too long, the voltage drop occurred at servo ON. • Defective WRCA01,WRCF01 circuit board • Defective converter • Defective amplifier (There is a possibility that power circuit was short-circuited internally.)	• Check that primary power supply is more than 170V. • Replace the amplifier. • If the error occurs again, replace the WRCA01 circuit board, WRCF01 circuit board, the converter.
4306	AMPLIFIER READY SIGNAL ERROR [Bit Pattern]	• There was no response (amp ready signal) of energizing completed from amplifier at servo ON. • While turning servo ON, the amp ready signal was intercepted. • The amp ready signal was not intercepted at servo OFF (at emergency stop). • While turning servo OFF (at emergency stop), the amp ready signal was turned ON. Reasons are as follows: • Defective WRCA01,WRCF01 circuit board • Defective converter • Defective amplifier (There is a possibility that power circuit was short-circuited internally.)	• Reset the alarm and turn servo ON again. • If the error occurs again, replace the WRCA01 circuit board, WRCF01 circuit board, the converter.
4307	SERVO ON DEFECTIVE SPEED Robot/Statio [Axis Data]	• While encoder was rotating, the servo power supply was turned on. Impossible t turn on control power supply in the rotation • The no brake axes, R,B,T axis for SK6, freely fell when the servo power supply was turned off by emergency stop. When the servo control power supply was turned back on this status, this alarm occurred.	Check the timing of turning on servo power supply again.

Alarm Message List

Alarm Number	Message	Cause	Remedy
4308	VOLTAGE DROP (CONVERTER) [Bit Pattern]	• Direct current power supply voltage supplied to amplifier for servopack has become less than143V. Reason is follows: • Primary power supply voltage was too low. • There was open phase. • Defective converte • Defective WRCA01circuit boar	• Check the connection for primary side wiring R,S,T, wire. • Check that power supply voltage is more than 170V. • If the error occurs again, replace the WRCA01, WRCF01 circuit board, the converter.
4309	DEFECTIVE ENCODER INTERNAL DATA Robot/Station [Axis Data]	The internal parameter error for serial encoder. It is thought the encoder was abnormal.	• Turn the power off then back on. If a phenomenon occurs again after repeating this operation several times, replace the motor (encoder) for axis occurred the error. • If the error occurs again, consult with a YASKAWA representative.
4310	ENCODER OVERHEAT Robot/Station [Axis Data]	The encoder has overheated to 100 degrees.	• Check that the ambient temperature is not too high. • Check the load again. • Check the primary power supply voltage (220V+10%). • If the error occurs again, replace the WRCA01 circuit board, the encoder.
4311	ENCODER BACK-UP ERROR Robot/Station [Axis Data]	• Because backup power supply voltage for encoder decreased (less than 2.6V), position data of the encoder disappeared. • Whenever a new motor was used, this error occurred.	• Reset the alarm. Adjust the home position again. • Check the battery voltage for encoder. (more than 2.8V) • Replace the battery. • If the error occurs again, replace the encoder. • Because it is charged the backup condenser, don't turn off power supply for a few minutes.
4312	ENCODER BATTERY ERROR Robot/Station [Axis Data]	Voltage of backup battery for encoder has decreased.(less than 2.8V) (In case leaving this voltage as it is, the backup error occurs and position data dis appears.)	• Check the battery voltage for encoder. (more than 2.8V) • Replace the battery.
4313	SERIAL ENCODER OVER HEAT Robot/Station [Axis Data]	The encoder has overheated to 100 degrees.	• Check that the ambient temperature is not too high. • Check the load again. • Check the primary power supply voltage (220V+10%). • If the error occurs again, replace the WRCA01 circuit board, the encoder.
4314	SERIAL ENCODER BATTERY ERROR Robot/Station [Axis Data]	Voltage of backup battery for encoder has decreased.(less than 2.8V)(In case leaving this voltage as it is, the backup error occurs and position data disappears.	• Check the battery voltage for encoder. (more than 2.8V) • Replace the battery.

Alarm Message List

Alarm Number	Message	Cause	Remedy
4315	COLLISION DETECT Robot/Statio [Axis Data]	• A collision from interference between robot and peripheral device etc. was detected. • The collision was mis-detected by the normal movement of the robot, because the detection level was small.	• Remove the object after resetting the alarm or move the robot to the safety position. • When the alarm cannot be reset because the robot comes in contact with the object, invalidate this function in the collision detection level set file or enlarge the detection level and move the robot to the safety position. • Enlarge the detection level so as not to mis-detect the collision detection by the normal movement of the robot. Moreover, set accurate information of the weight of the tool.
4316	PRESSURE DATA LIMIT	The value of pressure in the "GUN PRESSURE" file or the "PRESSURE" file exceeds the maximum pressure in the "GUN CONDITION" file.	Change the value of pressure in the "GUN PRESSURE" file or the "PRESSURE" file below the maximum pressure.
4400	NOT READY (ARITH) [Decimal Data]	The operation process of motion control does not end in regulated time. Data (1-5) stands for the alarm factor.	• Reset the alarm and repeat the operation. • If the error occurs again, contact you YASKAWA representative.
4401	SEQUENCE TASK CONTR ERROR [Decimal Data]	The error has occurred in job exec statement part. Data (1-255) stands for the alarm factor.	• Reset the alarm and repeat the operation. • If the error occurs again, contact you YASKAWA representative.
4402	UNDEFINED COM MAND(ARITH)	The instruction not defined was demanded of the path operation process.	• Reset the alarm and repeat the operation. • If the error occurs again, contact you YASKAWA representative.
4404	ARITHMETIC ERROR [Decimal Data]	The control error occurred in the path operation process. Data (1-8) stands for alarm factor.	• Reset the alarm and repeat the operation. • If the error occurs again, contact you YASKAWA representative.
4405	SELECT ERROR (PARAMETER) [Decimal Data]	The control error occurred in the path operation process.	• Reset the alarm and repeat the operation. • If the error occurs again, contact you YASKAWA representative.
4406	GROUP AXIS CONTROL ERROR [Decimal Data]	When operating cooperative control, the control error occurred in the path operation process. Data (1-12) stands for the alarm factor.	• Reset the alarm and repeat the operation. • If the error occurs again, contact you YASKAWA representative.
4407	TWO STEPS SAME POSITION (CIRC)	Among three taught points, there was the same point of two points or more.	Reset the alarm. Teach the different 3 points again.
4408	TWO STEPS SAME POSITION (SPLIN	Among three taught points, there was the same point of two points or more.	Reset the alarm. Teach the different 3 points again.

Alarm Message List

Alarm Number	Message	Cause	Remedy
4409	TWO STEPS SAME POSITION (3 POINTS)	Among three taught points, there was the same point of two points or more. (User coordinates, robots calibration, etc.)	Reset the alarm. Teach the different 3 points again.
4410	TWO STEPS SAME POSITION (WEAV)	The weaving base point was the same as the wall point.	Reset the alarm. Teach the different 3 points again.
4411	TEACH ERRO (SPLINE)	It was not an equidistant distance betwee teaching points.	Teach again to be an even distance between teaching point
4412	IMPOSSIBLE LINEAR MOTION (L/U)	In case the form of L,U axis for start point and end point were different in interpolatio motion except MOJV, it was not possible to operate.	Make the form of L,U axis same and teach again.
4413	IMPOSSIBLE LINEAR MOTION (S/L)	In case the form of S, L axis for start point and end point were different in interpolatio motion except MOJV, it was not possible to operate.	Make the form of S, L axis the same and teach again.
4414	EXCESSIVE SEG-MENT (LOW SPEED Robot/Station [Axis Data]	It exceeded rated speed of the motor at specified speed.	Reset the alarm. Reduce the speed of the step (Move instruction) occurred the alarm or change the robot pose.
4415	EXCESSIVE SEG-MENT (HIGH SPEED) Robot/Station [Axis Data]	It exceeded rated speed of the motor at specified speed.	Reset the alarm. Reduce the speed of step (Move instruction) occurred the alarm or change the robot pose.
4416	PULSE LIMIT (MIN.) Robot/Station [Axis Data]	It exceeded pulse software limit.	Release the alarm and teach again according to the release method when software limit range is exceeded.
4417	PULSE LIMIT (MAX.) Robot/Station [Axis Data]	It exceeded pulse software limit.	Release the alarm and teach again according to the release method when software limit range is exceeded.
4418	CUBE LIMIT (MIN.) Robot/Station [XYZ]	The tool control point exceeded cube soft ware limit.	Release the alarm and teach again according to the release method when software limit range is exceeded.
4419	CUBE LIMIT (MAX.) Robot/Station [XYZ]	The tool control point exceeded cube soft ware limit.	Release the alarm and teach again according to the release method when software limit range is exceeded.
4420	SPECIAL SOFTLIMIT (MIN.) Robot/Station [Axis Data]	It exceeded pulse software limit.	Release the alarm and teach again according to the release method when software limit range is exceeded.
4421	SPECIAL SOFTLIMIT (MAX.) Robot/Station [Axis Data]	It exceeded pulse software limit.	Release the alarm and teach again according to the release method when software limit range is exceeded.
4422	MECHANICAL INTERFERENCE (MIN.) Robot/Station [Axis Data]	An abnormal (reverse) axis interfered mutu ally.	Reset the alarm. Release the interference and teach again.

Alarm Message List

Alarm Number	Message	Cause	Remedy
4423	MECHANICAL INTERFERENCE (MAX.) Robot/Statio [Axis Data]	An abnormal (reverse) axis interfered mutually.	Reset the alarm. Release the interference and teach again.
4424	SPECIAL MECHANICAL INTRF (MIN.) Robot/Statio [Axis Data]	An abnormal (reverse) axis interfered mutually.	Reset the alarm. Release the interference and teach again
4425	SPECIAL MECHANICAL INTRF (MAX.) Robot/Statio [Axis Data]	An abnormal (reverse) axis interfered mutually.	Reset the alarm. Release the interference and teach again.
4426	PULSE MECHANICAL LIMIT (MIN.) Robot/Statio [Axis Data]	It exceeded pulse software limit.	Release the alarm and teach again according to the release method when software limit range is exceeded.
4427	PULSE MECHANICAL LIMIT (MAX.) Robot/Statio [Axis Data]	It exceeded pulse software limit.	Release the alarm and teach again according to the release method when software limit range is exceeded.
4428	SEGMENT CONTROL ERROR [Decimal Data]	The error occurred in data and the timing of the processing part where the operation part was controlled. Data (1-7) stands for the alarm factor.	• Reset the alarm and repeat the operation. • If the error occurs again, contact you YASKAWA representative.
4429	WRONG SPECIFIED CONTROL GROUP [Decimal Data]	The error occurs in information on the robot which uses for the job interpretation and the motion control. Data (1-9) stands for the alarm factor.	• Reset the alarm and repeat the operation • If the error occurs again, contact you YASKAWA representative.
4430	CPU COMMUNICATION ERROR [Decimal Data]	When interrupting various circuit board from the XCP01 circuit board, interrupted boards were not prepared or didn't respond.	• Reset the alarm and repeat the operation. • If the error occurs again, contact you YASKAWA representative.
4431	JHM ERROR [Decimal Data]	The data was abnormal in the job control process.	• Reset the alarm and repeat the operation. • If the error occurs again, contact you YASKAWA representative.
4432	INSTRUCTION INTERPRETER ERROR [Decimal Data]	The error occurred in the job interpretation exec statement part. Data (1-128) stands for the alarm factor.	• Reset the alarm. Select job and repeat the operation. • If the error occurs again, operate by th following procedure: ① Delete the command that caused the alarm and register again and start execution. ② Delete the job that cause the alarm and register again and start execution. • If the error occurs again, contact you YASKAWA representative.
4433	UNDEFINED GLOBAL VARIABLE [Decimal Data]	The global variable range was undefined.	Needs investigation at YASKAWA. Consult a YASKAWA representative.

Alarm Message List

Alarm Number	Message	Cause	Remedy
4434	VAR-SCOREBOARD CONTROL ERROR [Decimal Data]	The error occurred in variable scoreboard control.	• Reset the alarm. Select job and repeat the operation. • If the error occurs again, operate by the following procedure: ① Delete the command that caused the alarm and register again and start execution. ② Delete the job that cause the alarm and register again and start execution. • If the error occurs again, contact your YASKAWA representative.
4435	UNDEFINED LOCAL-VARIABLE [Bit Pattern]	The local variable was undefined.	Set the local variable used for sub header of job.
4436	LESS THAN 3 STEPS(CIRCULAR) [Decimal Data]	A circle step didn't contain a minimum of 3 consecutive points.	Reset the alam. Teach at least 3 consec utive points for the circle step.
4437	LESS THAN 3 STEPS(SPLINE)	A spline interpolation designation step didn't contain a minimum of 3 consecutive points.	Reset the alam. Teach at least 3 consec utive points for the spline interpolation designation step.
4438	UNDEFINED JOB [Decimal Data]	Job was not registered.	Reset the alarm and register job. Or Delete CALL, JUMP instruction caused the alarm.
4439	UNDEFINED LABEL [Decimal Data]	No labels existed in the currently executing job.	Reset the alarm and register job. Or Delete CALL, JUMP instruction occurred the alarm.
4440	UNDEFINED RETURN JOB [Decimal Data]	The job call stack contained no return.	Reset the alarm and start execution from the master job. Or delete RET instruction.
4441	LACK OF LOCAL-VARIABLE AREA [Decimal Data]	Too many local variables used in the job.	Reset the alarm and reduce the use number of the local variables
4442	LOCAL-VARIABLE CONTROL ERROR [Decimal Data]	When job was executed, the error occurred in control process of local variable. Data (1-4) stands for the alarm factor.	• Reset the alarm. Select job and repeat the operation. • If the error occurs again, operate by following procedure: ① Delete the command that caused the alarm and register again and start execution. ② Delete the job that caused the alarm and register again and start execution.
4443	JOB CALL STACK ERROR [Decimal Data]	At the job CALL,RET, END instruction, when operating the job call stack, internal control data of inside was abnormal. Data (1-2) stands for the alarm factor.	• Reset the alarm. Select the job again and repeat the operation. • If the error occurs again, contact your YASKAWA representative.

Alarm Message List

Alarm Number	Message	Cause	Remedy
4444	UNSUCCESSFUL FINE POSITIONING [Binary Data]	• When executing PL=0 or interrupting external servo, the servo deflection was not put within time. • Excessive external force • The servopack, the motor were abnormal.	• Reset the alarm. In case an external force is affecting the robot, move the robot to remove the external force and repeat the operation. • In case the phenomenon occurs again without any external force, try to insert the XCP01 circuit board again. • If the error occurs again, contact you YASKAWA representative.
4445	DATA PRESET ERROR [Decimal Data]	When the interpretation process section of job annulled the content of interpretation and started to interpret again, various kinds of data were attempted to be initialized. At the time, a disagreement of data occurred. Data (1-255) stands for the alarm factor.	• Reset the alarm. Select the job and repeat the operation. • If the error occurs again, contact you YASKAWA representative.
4446	OVER VARIABLE LIMIT [Decimal Data]	The range of the numerical value of the variable for storage destination was exceeded.	Increase the variable range at the storage destination or rewrite the job to bring the number of variables in range.
4447	DEFECTIVE TAUGHT POINT (CIRC)	A straight line linked the three points.	Reset the alarm and teach again.
4448	WEAVING CONTROL ERROR [Decimal Data]	When executing the weaving motion control, the control error occurred in the path operation process. Data stands for the alarm factor. 4:Weaving speed instruction was moving time instruction, moving time was less than 0. 5:Weaving speed instruction was frequency instruction, frequency was less than 0. 6.Weaving stopping time was negative 7:Vertical direction distance at or horizontal direction distance was 0 in triangular wave, L type weaving. 9:Distance between P point and control point was less than 0 in the wrist weaving Except above: Control error	• 4:Set 0.1 seconds or more in the moving time of weaving file. • 5:Set 0.1 hertz or more in the frequency of weaving file. • 6:Set a positive value in the stopping time of weaving file. • 7:Set 1mm or more in the vertical direction, horizontal direction distance of weaving file. • If the error occurs again, contact you YASKAWA representative.
4449	UNMATCHED POSN VAR DATA TYPE [Bit Pattern]	The data types (pulse, Cartesian) of the stored data and the storage destination are different.	Match the data types (pulse, Cartesian) of the stored data and the storage destina tion.
4450	FILE NO. ERROR [Decimal Data]	The error occurred during file No. check. Data stands for the alarm factor.	• Reset the alarm. Select the job and repeat the operation. • If the error occurs again, contact you YASKAWA representative.
4451	UNDEFINED REFERENCE POINT [Bit Pattern]	No reference point was registered or insufficient reference points were registered.	Correctly register reference points.
4452	STACK MORE THAN 8 (JOB CALL [Decimal Data]	The job call stack overflowed.	Reset the alarm and modify the job to reduce the jobs in the job call stack.
4453	OVER VARIABLE NO. [Bit Pattern]	A variable number was out-of-range.	Modify the job by using the permitted variable number.

Alarm Message List

Alarm Number	Message	Cause	Remedy
4454	UNDEFINED WELDER CONDI-TION FILE [Decimal Data]	The welder condition data file was not set.	Set the welder condition data file.
4455	UNDEFINED ARC START COND FILE [Decimal Data]	The arc start condition file was not set.	Set the arc start condition file.
4456	UNDEFINED ARC END COND FILE [Decimal Data]	The arc end condition file was not set.	Set the arc end condition file.
4457	WRONG WELDER SELECTION [Decimal Data]	The arc voltage command units didn't match the welder power supply (individual, uni-fied).	Match the arc voltage command units.
4458	EQUATION EXCEP-TION ERROR [Decimal Data]	When executing equation of SET instruc-tion, the item of the equation which couldn't be executed was attempted.	• Reset the alarm and repeat the opera-tion. • If the error occurs again, operate the fol lowing procedure: ① Delete the command that caused the alarm and register again. ② Delete the job that caused the alarm and register again.
4459	EXCESSIVE INSTRUCTION EQUATION [Decimal Data]	An equation was too long.	Divide up the equation to reduce its length.
4460	ZERO DIVIDED OCCURRENCE [Decimal Data]	A division by zero was attempted.	Set not to divide by zero.
4461	UNDEFINED AUTO WELD RELEASE COND [Decimal Data]	Number of automatic sticking release attempts was set to zero in the arc auxiliary file.	Set the number of automatic stickin release attempts and repeat the opera tion.
4462	UNDEFINED POSI-TION FOR ARC RETRY [Decimal Data]	Arc retry was set but no move instruction exists after ARCON.	Set a move instruction after ARCON.
4463	PARITY ERROR	General I/O group parity error.	Stop parity error from occurring.
4464	OVER BCD RANGE	• An attempt was made to output a value which exceeded the maximum BCD value limit of 99 (decimal) without parity or 79 (decimal) with parity. • An attempt was made to read data which couldn't be represented as BCD (most-or least-significant 4 bits are 9 or above) to a variable.	• Reset the data in the permitted range. • Check the designated data (BCD/binary and parity check.
4465	OVER BINARY RANGE (PARITY CHECK)	An attempt was made to output a valu exceeding 127(decimal) while the parity check was designated.	• Reset the data in the permitted range. • Review the parity check.

Alarm Message List

Alarm Number	Message	Cause	Remedy
4466	OFFLINE UNDE FINED COM-MAND(ARITH) [Decimal Data]	Undefined instruction was required for software for off-line path arithmetic of the XCP01 circuit board. MCP02 circuit board or the contact was defective.The control of software was abnormal.	• Reset the alarm and repeat the operation. • If the error occurs again, contact you YASKAWA representative.
4468	ROBOT CALIBRA-TION DATA ERRO [Decimal Data]	The error occurred in the process of making robot calibration data.	• Reset the alarm and repeat the operation. • If the error occurs again, contact you YASKAWA representative.
4469	ROBOT CALIBRA-TION FRAME ERROR [Decimal Data]	The error occurred in frame conversion process of robot calibration data	• Reset the alarm and repeat the operation. • If the error occurs again, contact you YASKAWA representative.
4471	CALIBRATION DATA ERROR [Decimal Data]	The error occurred in the process of making calibration data.	• Reset the alarm and repeat the operation. • If the error occurs again, contact you YASKAWA representative.
4472	TOOL CALIBRATION DATA ERROR [Decimal Data]	The error occurred in the process of making calibration data.	• Reset the alarm and repeat the operation. • If the error occurs again, contact you YASKAWA representative.
4473	ARITHMETIC ALARM RESET ERROR [Decimal Data]	System data didn't correspond with reset process after the alarm occurred in arithmetic section.	• Reset the alarm and repeat the operation. • If the error occurs again, contact you YASKAWA representative.
4474	WRONG CONTROL GROUP AXIS [Bit Pattern]	An instruction such as a job call (CALL) or job jump (JUMP) was used for a call or jump to a job in a group outside the currently used job control group.	Include the call source job control group in the control group used by the current call destination job.
4475	CANNOT EXECUTE JOB(NO ROBOT) [Decimal Data]	When executing ARCON, WVON instruction, the robot was not in the prescribed job control group.	Add a robot to the job control group.
4476	CANNOT EDIT (EDIT LOCK JOB) [Decimal Data]	An attempt was made to overwrite an edit-locked job.	Cancel the edit lock.
4477	SELECT ERROR (APPLICATION) [Decimal Data]	When executing operation instruction, the selection parameter (parameter specified for maker) for first application and application parameter (AP) was not adjusted.	Needs investigation. Consult a YASKAWA representative.
4480	SELECT ERROR(SENSOR) [Decimal Data]	When executing sensor instruction, the selection parameter (parameter specified for maker) for first sensor application and sensor parameter (SE) is not adjusted.	Needs investigation. Consult a YASKAWA representative.
4484	WRONG PORT NO. (ANALOG OUTPUT) [Decimal Data]	Parameter(AxP010) showed the head of analog port used for arc, sealing was incorrect.	Change the parameter to a normal value.

Alarm Message List

Alarm Number	Message	Cause	Remedy
4485	WRONG SELECTION (SENSOR) [Decimal Data]	When executing sensor instruction, robot designation (system parameter) uses sensor application and robot designation (sys tem parameter) uses application was not corresponded.	Needs investigation. Consult a YASKAWA representative.
4486	PASS OVER [Decimal Data]	The path went outside the designated pass over monitoring area.	• Correct the cause of the pass-over. • Set the pass-over radius inside the per mitted range.
4487	WRONG MECH PARAMETER FILE [Decimal Data]	Path arithmetic process section control error.	• Reset the alarm and repeat the operation. • If the error occurs again, contact your YASKAWA representative.
4488	INCOMPLETE PT FRAME [Decimal Data]	Path arithmetic process section control error.	• Reset the alarm and repeat the operation. • If the error occurs again, contact your YASKAWA representative.
4489	DEFECTIVE TAUGHT POINT(CUTTING) [Decimal Data]	Impossible to execute cutting motion. Data stands for the alarm factor. 1:CW axis CUT pulse error C,W axis position on cutting start is not zero(0) pulse. 2:Cutting(edge) radius 0 Cutting (edge) radius is zero(0).	1:Set C,W axis position of cutting start position zero(0). 2:Set the radius zero(0) or more.
4490	DEFECTIVE TAUGHT POINT(ENDLESS [Decimal Data]	Impossible to execute endless motion. Data stands for the alarm factor 1:Interpolation motion impropriety of end less function. Linear motion impropriety. This error occurred as follows. When operating playback panel and programming pendant, though continuous rotation was completed, MRESET instruction was not exe cuted but linear interpolation was executed. 4:Instruction position of step has permitted pulse over cursor for endless axis exceeded 2,147,483,647 pulse.	1:In case this alarm occurs when operat ing programing pendant, reset the alar and execute the MRESET operation. In case this alarm occurs when operating playback, set the MRESET instruction before executing the MOVL, MOVC instruction 4:Check the teaching position again. Set C,W axis position of cutting start position zero(0).
4491	CORRECTIONAL DIRECTION ERROR [Decimal Data]	When correcting a motion, the error occurred in the process of making a correction in the direction for path arithmetic. 4:Referrence points were the same.	• Teach reference points again. • If the error occurs again, contact your YASKAWA representative.
4492	POSITION CORRECTION ERROR [Decimal Data]	When correcting a motion, the error occurred in making process of making a correction in the volume for path arithmetic.	• Reset the alarm and repeat the operation. • If the error occurs again, contact your YASKAWA representative.
4493	OVER TOOL FILE NO. [Decimal Data]	The error occurred in the tool file control process.	• Reset the alarm and repeat the operation. • If the error occurs again, contact your YASKAWA representative.

Alarm Message List

Alarm Number	Message	Cause	Remedy
4494	DEFECTIVE TAUGHT POINT(WEAV) [Decimal Data]	1:Weaving start point and end point were the same. • In case there was no instruction of sto weaving, the position of weaving start point and end point was the same point or the position of weaving start point and refer ence point is the same point. • In case there is instruction to stop weaving, the position of the weaving start point and reference point is the same point.	Check the position of the start point, end point and reference point. Teach again.
4495	UNDEFINED ROBOT CALIBRATION [Bit pattern]	Robot calibration was incomplete when a coordinated move instruction was executed.	Conduct robot calibration.
4496	PARAMETER ERROR [Decimal Data]	Parameter settings caused division by zero.	Needs investigation. Consult a YASKAWA representative.
4497	DEFECTIVE TAUGHT POINT(CALIB) [Decimal Data]	There was a problem with the taught points.	Teach the points again.
4498	CANNOT EXECUTE JOB(NO GRP AXIS) [Decimal Data]	An illegal instruction was executed in a job with no control group.	Register the instruction in a job with control axis.
4499	UNDEFINED POSITION VARIABLE [Bit Pattern]	Undefined position data was used.	Define the position data.
4500	UNDEFINED USER FRAME [Decimal Data]	Undefined user coordinates were used.	Define the user coordinates.
4501	OUT OF RANGE(PARALLEL PROCESS) [Decimal Data]	The error occurred in task control process of independent control function.	• Reset the alarm and repeat the operation. • If the error occurs again, contact you YASKAWA representative.
4502	SL BOARD ON-LINE ERROR	When turning on power supply, detected in the XCP01 circuit board that the XCP02 didn't normally work.	• Insert the XCP02 circuit board again. • If the error occurs again, contact you YASKAWA representative.
4504	MEASURE INST EXECUTE ERROR [Decimal Data]	When executing the measure instruction, the error occurred. Data stands for the alarm factor. 2:MEASON instruction 3:MEASOF instruction	• Reset the alarm and repeat the operation. • If the error occurs again, contact you YASKAWA representative.
4505	UNDEFINED POSITION FOR ARC ON [Decimal Data]	Retry was possible with ARC RETRY exe cution only if a step existed before the ARCON instruction.	Register a step in front of the ARCON instruction.
4506	UNDEFINED POS FOR RESTART RETURN [Decimal Data]	No restart-return step existed in the job when a restart was attemted.(Eg.,a retry request was received during 1-step execu tion of CALL destination job.	Reset the alarm and correct the job.
4507	REFP POS ERROR (SEARCH MOTION)	The distance between the search start point and aimed point was too short to determine the search direction.	Reset the alarm and increase the distance between the search start point and aimed point.

Alarm Message List

Alarm Number	Message	Cause	Remedy
4508	PECIFIED ERROR (COORDINATE) [Decimal Data]	Position confirmation was not possible because the position variable (P) designates coordinates as tool coordinates, master tool coordinates. Data stands for the alarm factor. 0:No coordinates 1:Designation error for master tool coordinates system 2:Designation error for tool coordinates system	Reset the alarm and change the coordinates.
4509	MFRAME ERROR [Decimal Data]	Impossible to create user coordinates 8:No position file registered.	Register the position file (variable).
4510	CANNOT EXECUTE INSTRUCTION (SQRT) [Decimal Data]	The attempt was made to calculate the root of a negative number (Second argument is a negative.)	Correct the job.
4511	OUT OF RANGE (DROP-VALUE) [Control Group]	When turning on servo, the difference in robot position pulse at servo ON and the previous servo OFF exceeded the permitte range. (Permitted pulse is normally 100pulse.	Reset the alarm and repeat the operation.
4512	TWO STEPS SAME LINE(3 STEPS)	The three points for creating the user coodinates or three or more taught points for robot calibration lie on the same line.	Teach again such that the three points do not lie on the straight line.
4513	EXCESSIVE SEGMENT (SAFETY 1): LOW Robot/Station [Axis Data]	The specified speed exceeded the safe speed.	After resetting the alarm, reduce the speed of the step where the alarm occurred (move instruction) or change the robot posture.
4514	EXCESSIVE SEGMENT (SAFETY 1): HIGH Robot/Station [Axis Data]	The specified speed exceeded the safe speed.	After resetting the alarm, reduce the speed of the step where the alarm occurred (move instruction) or change the robot posture.
4515	EXCESSIVE SEGMENT (SAFETY 2): LOW Robot/Station [Axis Data]	The specified speed exceeded the safe speed.	After resetting the alarm, reduce the speed of the step where the alarm occurred (move instruction) or change the robot posture.
4516	EXCESSIVE SEGMENT (SAFETY 2): HIGH Robot/Station [Axis Data]	The specified speed exceeded the safe speed.	After resetting the alarm, reduce the speed of the step where the alarm occurred (move instruction) or change the robot posture.
4517	SEARCH MONITOR SET ERROR (SERVO) [Decimal Data]	The error occurred in the interface with servo on feedback ratch mode.	Check the system version of the XCP01, WRCA circuit board.
4518	SEARCH MON RELEASE ERROR (SERVO) [Decimal Data]	The error occurred in the interface with servo on feedback ratch mode.	Check the system version of the XCP01, WRCA circuit board.

Alarm Message List

Alarm Number	Message	Cause	Remedy
4519	SPHERE INTRF ERR(ROBOT) [Decimal Data]	Robot calibration was not executed.	Execute robot calibration.
4520	AXIS BLOCKING [Control Group]	Operation was instructed to group axis out of axis blocking on play mode.	• Reset the alarm and repeat the operation. • In case operating robot after reset the alarm, turn on the general input signal set in the parameter.
4521	WRONG JOB TYPE [Bit Pattern]	0000_0001:Robot job was started from concurrent job by CALL or JUMP instruction. 0000_0001:Concurrent job was started from robot job by CALL or JUMP instruction.	Check the starting job.
4522	TAG DATA CHANGE PROCESS ERROR [Decimal Data]	The error occurred when welding conditions were changed in a job or file.	Correct the job.
4524	CANNOT EXECUTE INST (CONCUR JOB)	A concurrent job contained an instructio (MOV, etc.) which couldn't be executed in a concurrent job.	Correct the job.
4526	SYNTAX ERROR IN EQUATION INST [Decimal Data]	Internal data of equation inst was abnormal.	Needs investigation. Consult a YASKAWA representative.
4527	UNDEFINED PORT NO. (AOUT) [Decimal Data]	Designation of port No.for job was abnormal.	Needs investigation. Consult a YASKAWA representative.
4528	SYNTAX ERROR [Decimal Data]	Internal data was abnormal in instruction. (System function unmatch	Needs investigation. Consult a YASKAWA representative.
4529	TWIN COORDINATED ERROR [Decimal Data]	1: The job started by SYNC was a job without any robot axes (job with station axes only, or concurrent job, etc.). 2: The job started by SYNC was a job with robot axes only.	Set the R□+S□ job to the job that is started by SYNC.
4534	TORQUE INTERFERENCE	During operation at the designated speed, there is axis that the robot axis or motor load torque exceeded the permitted torque.	Reset the alarm. Reduce the step (for moving instruction) speed that caused the alarm or change pose of robot.
4540	JOB QUE EMPTY ERROR	[QUE] was called by CALL instruction and JUMP instruction when all job queue was not used.	Set data in the job queue and call [QUE].
4543	STACK LESS THAN 0 (JOB CALL) [Decimal Data]	The error occurred in internal data when returning job.	• Reset the alarm and repeat the operation. • If the error occurs again, contact you YASKAWA representative.
4564	INTERNAL STATUS ERR (SEARCH HALT) [Decimal Data]	When execution of start point detecting function (SRCH), search function for general sensor (ASRCH), force detecting func tion (TSRCH) was completed, the process error occurred.	• Reset the alarm and repeat the operation. • If the error occurs again, contact you YASKAWA representative.
4565	SOFTWARE UNMATCH [Decimal Data]	Operating function didn't correspond to system.	Need the investigation. Consult YASKAWA representative.

Alarm Message List

Alarm Number	Message	Cause	Remedy
4567	CANNOT MONITOR DISTANCE	The attempt was made to execute MOVJ, MOVS when operating ARC retry, restart.	Set not to operate ARC retry, restart or, change the instruction (interpolation) to MOVL, MOVC.
4572	UNDEFINED MOTOR GUN CONTROL GRP	There was no group setting controlled as motor gun.	Configulate again on customer maintenance mode, set the motor gun axis correctly.
4574	SPOT WELD COMPLETE TIME LIMIT	Welding completed signal from timer conductor or welding error signal doesn't ente even if waiting set time.	• Correct the factor, no turning on powe supply of timer conductor etc., and repeat the operation. • In case that it takes time to response from the timer, lengthen set time.
4575	ERROR IN WELD START TIMING SET	When there was no set of second pressur at servogun, welding timing was set [After first pressure].	Set the second pressure or, change the start timing.
4576	ERR IN SERVO GUN CONT MODE	The error occurred in control process of servogun.	Needs investigation. Consult a YASKAWA representative.
4577	ERR IN SERVO GUN MODE RLSE	The error occurred in control process of servogun.	Needs investigation. Consult a YASKAWA representative.
4578	SPOT WELD ERROR [Decimal Data]	The error occurred in timer conductor of system designated by data.	Reset the timer conductor that caused the welding error and repeat the operation.
4581	DEFECTIVE ANTICIPATION FILE [Decimal Data]	A setting in the anticipation output file is set to an improper value. The setting of the OT output or OG output is “- 1: OT output No. failure 2: OG output No. failure	After resetting the alarm, set to the proper value.
4583	CANNOT EXECUTE GUN TYPE	Set gun was set by operation mode of con trol impossible.	Change to the mode applied to the gun.
4584	STRWAIT TIME LIMIT	Confirmation signal designated by stroke switch confirmation instruction doesn't enter even if waiting set time.	• Correct the factor, defective LS etc., and repeat the operation. • If the error occurs again, contact your YASKAWA representative.
4588	COMPENSATION DIRECTION UNSETTING	When correction direction of fix side chip for gun condition data file was except 1, 2, [Contact Teaching], [Abrasion Correction] etc. was intended to used.	Set the correction direction of fix side chip to apply the gun.
4589	ABRASION BASIS POS UNSETTING [Decimal Data]	When using abrasion correction function at servogun, various standard position was not registered. 1:Standard position A 2:Standard position B 3:Standard position C	Register a required standard position.
4601	UNDEFINED GUN COND FILE [Decimal Data]	Gun condition data file was not set.	Set the gun condition data file completely.
4603	WIRE STICKING [Decimal Data]	The sticking was detected by the welder. 1: Welder 1 2: Welder 2 3: Welder 3 4: Welder 4	Determine the sticking factor of the welder.

10.4 I/O Alarm Message List

■ Arc Welding Application

	Alarm No.	Registration No.	I/O Alarm Message
System Section			
	9000	00	
	9010	01	MISSING ARC GENERATION CON-FIRM
	9020	02	ARC SHORTAGE
	9030	03	
	9040	04	GAS SHORTAGE (RESTART)
	9050	05	WIRE SHORTAGE (RESTART)
	9060	06	
	9070	07	
	9080	08	
	9090	09	
	9100	10	
	9110	11	
	9120	12	
	9130	13	
	9140	14	
	9150	15	
	9160	16	
	9170	17	
	9180	18	
	9190	19	
	9200	20	
	9210	21	
	9220	22	
	9230	23	
User Section			
	9240	24	
	9250	25	
	9260	26	
	9270	27	
	9280	28	
	9290	29	
	9300	30	
	9310	31	

■ Handling Application

	Alarm No.	Registration No.	I/O Alarm Message
System Section			
	9000	00	AIR PRESSURE LOWERED
	9010	01	
	9020	02	
	9030	03	
	9040	04	
	9050	05	
	9060	06	
	9070	07	
	9080	08	
	9090	09	
	9100	10	
	9110	11	
	9120	12	
	9130	13	
	9140	14	
	9150	15	
	9160	16	
	9170	17	
	9180	18	
	9190	19	
	9200	20	
	9210	21	
	9220	22	
	9230	23	
User Section			
	9240	24	
	9250	25	
	9260	26	
	9270	27	
	9280	28	
	9290	29	
	9300	30	
	9310	31	

■ Spot Welding Application

	Alarm No.	Registration No.	I/O Alarm Message
System Section			
	9000	00	ERR OF WELD TIMER COOLING WATER
	9010	01	ERROR OF GUN COOLING WATER
	9020	02	ERROR IN TRANSTHERMO OF GUN
	9030	03	AIR PRESSURE LOWERED
	9040	04	
	9050	05	
	9060	06	
	9070	07	
	9080	08	
	9090	09	
	9100	10	
	9110	11	
	9120	12	
	9130	13	
	9140	14	
	9150	15	
	9160	16	
	9170	17	
	9180	18	
	9190	19	
	9200	20	
	9210	21	
	9220	22	
	9230	23	
User Section			
	9240	24	
	9250	25	
	9260	26	
	9270	27	
	9280	28	
	9290	29	
	9300	30	
	9310	31	

■ General Application

	Alarm No.	Registration No.	I/O Alarm Message
System Section			
	9000	00	
	9010	01	
	9020	02	
	9030	03	
	9040	04	
	9050	05	
	9060	06	
	9070	07	
	9080	08	
	9090	09	
	9100	10	
	9110	11	
	9120	12	
	9130	13	
	9140	14	
	9150	15	
	9160	16	
	9170	17	
	9180	18	
	9190	19	
	9200	20	
	9210	21	
	9220	22	
	9230	23	
User Section			
	9240	24	
	9250	25	
	9260	26	
	9270	27	
	9280	28	
	9290	29	
	9300	30	
	9310	31	

11 Error

11.1 Error Message List

Error warns the operator not to advance to the next operation caused by a wrong operation and the access method when programing pendant operation or an external equipment (computer, PLC, etc.)accesses.
When an error occurs, release it after the confirmation of the content of the error.

To release the error perform following the operation.

- Press [CANCEL] on programming pendant.
- Input alarm/error reset signal (specific input).

NOTE An error is different than an alarm because it does not stop the robot even if it occurred while the robot was operated (during playback).

11.1.1 System and General Operation

Error NO.	Data	Message	Contents
10	-	Turn off servo power and perform corrective action	It cannot be operated on servo power supply.
20	-	Depress TEACH	Out of specified mode operation
30	-	Illegal setting for number of variables	Parameter setting error
31	-	Illegal setting for number of variables name	Limit of variables name is 64
40	-	Undefined robot position variables	Position type variable cannot be used
50	-	Depress MODIFY	
60	-	Undefined points (ORG, XX, XY)	Not registered user coordinates basic 3 points (ORG, XX, XY)
70	-	Program and current tool different	The tool number registered with teaching position data didn't match the tool number.selected at the programing pendant.
80	-	Same position in the 3 points	
90	-	Set robot exactly to taught position	
100	-	On overrun recovery status	
110	-	Turn ON servo power	
120	-	Set to PLAY mode	
130	-	No start using external signal	
140	-	No start using P.BOX	
150	-	TEACH-LOCK mode	
170	-	Servo off signal ON	
180	-	TEACH mode select signal ON	
190	-	Defined group axis	
200	-	Undefined coordinated robots	
210	-	Cannot register between stations	
220	-	Taught by other robot	
230	-	While releasing soft limit	
240	-	Undefined robot	
250	-	Defined condition No.	

Error NO.	Data	Message	Contents
260	-	Undefined file	
270	-	Undefined gun condition file	
280	-	Lack of number of I/O points	
290	-	Cannot set same No.	
300	-	Undefined user frame	
310	-	Cannot register Master JOB	
320	-	Cannot operate CHECK-RUN	
330	-	Cannot operate MACHINE LOCK	
340	-	Cannot operate Master JOB	
350	-	Cannot initialize	
360	-	Teach point not specified	
370	-	No SYNCHRO operation	
380	-	Position not checked	Second home position was not checked
390	-	Can specify servo off by safety relay	
400	-	Wrong specification of measure interval	Wrong specification of measure interval for TRT function.
410	-	Time could not be measured	Time could not be measured
420	-	Incorrect number of taught points	Taught points for tool calibration were incorrect.
430	-	Register start reserved JOB	
440	-	Clear data to teach at the tool because other tool is set	
450	-	Wrong JOB for measuring	
460	-	Excess time for measuring	
470	-	Calibration at another file	
480	-	Calibration at another robot combination	
490	-	Cannot calibrate at this combination	
500	-	Undefined robot calibration data	
510	-	Undefined axis	
520	-	Cannot select two coordinated combination	
530	-	Start reservation mode	

Error NO.	Data	Message	Contents
540	-	Not start reservation mode	
550	-	Start reserved JOB change prohibit is set	
560	-	Cannot teach position while soft limit released	
570	-	Turn on all contactor's servo power	
580	-	Connect group axis to one contactor	
590	-	Register group axis combination	[SYNCHRO] key for coordinated job which was not registered as group was pressed.
600	-	Out of setting data range	
610	-	Cannot use the user coordinate	
620	-	Select JOB (robot)	
630	-	Not completed to load original tool file	
640	-	Not specified tool file	
650	-	Incorrect measured data	
660	-	Wrong data type of position variable	
670	-	Enter path number	
680	-	Defined data	
	XXX		File No.
690	-	Illegal path number	
700	-	Wrong CMOS memory board type	
710	-	Enter path number	
720	-	Defined file name	
730	-	Undefined Name Position file	
740	-	This name cannot be defined	
750	-	Undefined Name Position	
760	-	Error in start condition set	
770	-	During robot operation	
780	-	Quit operation by mini operation pendant	
790	-	FWD/BWD don’t work in the handle operation	
800	-	The gun of designation is not connected	

Error NO.	Data	Message	Contents
810	-	Servo power supply is limited	
820	-	Modification range over	
830	-	Cannot move while modifying speed	
840	-	Unregistered key	
850	-	Cannot register instruction	
860	-	Please release key registration mode	
870	-	This key cannot be allocated	
880	-	Same relay cannot be set	
890	-	This key has already been registered. Cannot register them once	
900	-	Relay No. not set	
910	-	Cannot be registered because job control group not same	
920	-	Cannot modify this setting	
930	-	Undefined conveyor calibration data	

11.1.2 Editing

Error No.	Data	Message	Contents
1010	-	EDIT LOCK mode	
1020	-	Enter correct value	
1030	-	Unauthorized ID No.	
1040	-	-	
1050	-	Enter correct date	
1060	-	Enter correct clock	
1070	-	Enter a number in 8 figures	

11.1.3 Job Defined Data

Error No.	Data	Error Message	Error Contents
2010	-	Incorrect character	
2020	-	Name not entered	
2030	-	Undefined JOB name	
2040	-	Defined JOB name	
2050	-	Address not found	
2060	-	Select master	
2070	-	Set robot exactly to taught position	
2080	-	Press INSERT or MODIFY	
2090	-	Only modifying move instruction possible	
2100	-	JOB cannot be edited.	
2110	-	Over soft limit	
2120	-	Cannot insert/alter/delete with servo off	
2130	-	Only modifying move instruction possible	
2150	-	Inserting is not possible from this point	
2160	-	Cannot modify or delete this position	
2170	-	Press INSERT to record same step as previous step	
2180	-	Cannot insert data	

Error No.	Data	Error Message	Error Contents
2190	-	Cannot delete data	
2200	-	Cannot modify data	
2210	-	Illegal data setting	
2220	-	Display edit instruction	
2230	-	Illegal instruction equation	
2240	-	Excessive instruction equation	
2250	-	Unmatched number of parentheses in equation	
2260	-	Wrong group axis selection	
2270	-	Cannot insert any more instruction in JOB	
2280	*	JOB memory is full	
	1		Lack of position file memories
	2		Lack of JOB registering memories
	3		Lack of instruction file memories
	4		Lack of memory pool
	5		Lack of pass condition file for multi-layer
2290	-	Undefined master JOB	
2291	*	Undefined SUB Master JOB	
	1		Sub-master 1
	2		Sub-master 2
	3		Sub-master 3
	4		Sub-master 4
	5		Sub-master 5
2292	-	Undefined MASTER START JOB	
2293	*	Undefined SUB START JOB	
	1		Sub-master 1
	2		Sub-master 2
	3		Sub-master 3
	4		Sub-master 4
	5		Sub-master 5

Error No.	Data	Error Message	Error Contents
2300	-	Cannot teach JOB without group-axis specification	
2310	*	Same label exists	
	XXX		
2320	-	Cannot create coordinated JOB	Line No.
2330	-	Cannot edit coordinated instruction	Calibration not complete
2340	-	Pasted data not found	
2350	-	Editing data not found	
2360	-	Cannot create editing area	
2370	-	Cannot cut/copy NOP and EN instructions	
2380	-	Wiring JOB selection	
2390	-	Wrong group axis selection	
2400	-	Cannot move in cut & paste editing	
2410	-	When variable is used for speed setting, perform a line-edit	
2420	-	When variable is used for teach setting, perform a line-edit	
2430	-	Reverse data not found	
2440	-	Move C-and W-axis to basic position	Laser cutting
2450	-	Relative JOB not permitted	
2460	-	Specified JOB is already converted	
2470	-	Wrong JOB type	
2480	-	Wrong JOB coordinates setting	
2490	-	Execute NEXT/BACK operation once	
2500	-	Cannot convert the JOB	
2510	-	Cannot correct position in the JOB	
2520	-	Enter JOB name	
2530	-	Illegal step number	
2540	-	Enter step number	
2550	-	Duplicated step number	
2560	-	Cannot correct steps of position variables and REFP	

Error No.	Data	Error Message	Error Contents
2570	-	The step does not contain speed	
2580	-	The step dose not contain PL/CONT	
2590	-	Soft limit range over	
2600	-	Cannot teach position in concurrent JOB	
2610	-	Wrong JOB kind	
2620	-	Cannot correct play speed in the JOB	
2630	-	Conveyor position not reset	
2640	-	Incorrect JOB name	
2650	-	Defined JOB name	
2660	-	Register MOVL inst. after circular block	
2670	-	Undefined target JOB	
2680	-	Wrong designation of welding section	
2690	-	Defined same kind JOB	
2700	-	Press position not reset	
2710	-	Relative job can’t be shifted with pulse type	
2720	-	Cannot correct position variables	

11.1.4 External Memory Equipment

Error No.	Data	Message	Contents
3010	-	Floppy disk cable not connected	
3020	-	Floppy disk not inserted into floppy disk drive	
3030	-	Floppy disk protection is ON	
3040	-	File not saved on floppy disk	
3050	-	File saved on floppy disk	
3060	-	Out of memory on floppy disk	
3070	-	Number of files on floppy disk	
3080	-	I/O error on floppy disk	
3090	*	Transmission error with floppy disk drive	
	1		Framing error
	2		Overrun error
	3		Parity error
	4		Data code error
	5		Data read error
	6		Data write error
	7		Data time out
	8		Serial I/O error
	9		Error other than described above
3100	-	Total checksum error	
3110	-	Syntax error	
3120	*	HEX code error	
	1		Specification error of data record
	2		Specification error of FEO record
	3		Record type error
	4		Total check error of record
3130	-	Verify error	
3140	-	Wrong pseudo instruction	

Error No.	Data	Message	Contents
3150	*	Concurrent I/O record error	
	1		Format error
	2		Ladder program is too long
	3		Exceed the range of the data
	4		Specification error of channel No.
	5		Specification error of relay No.
	6		Timer value error
	7		Specification error of timer No.
3160	-	Cannot load illegal system data	
3170	*	Condition file data error	
	1		Format error
	2		Specified file No. is omitted
	3		Specified tool No. is omitted
	4		User file is not registered
3180	-	Concurrent I/O data transmission error	

Error No.	Data	Message	Contents
3190	*	Error in JOB data record	
	1		The number of position data (NPOS) record wrong for the format
	2		Record on the user coordinate No. is wrong for the format
	3		Tool record is wrong for the format
	4		Record on the position data section is wrong for the format
	5		Robot type of XYZ data (RCONF) record is wrong for the format
	6		Date record is wrong for the format
	7		Comment record is wrong for the format
	8		JOB attribute data(ATTR) record is wrong for the format
	9		Control group (GROUP) record is wrong for the format
	10		Local variable (LVARS) record is wrong for the format
	11		JOB argument (JARGS) record is wrong for the format
	12		Teaching coordinates for relative JOB (FRAME) record is wrong for the format
	13		Position data coordinates do not match relative job coordinates
3200	-	NOP or END instruction not found	
3210	-	Position No. storage area not found	
3220	*	Syntax error in instruction data	
	2		Interior control error
	3		Undefined instruction/tag
	4		Instruction/tag shortage
	5		Disuse instruction/tag
	6		Sub instruction
	7		Non instruction

Error No.	Data	Message	Contents
3220	8		Invalid instruction
	9		Invalid tag
	10		Invalid character
	11		Undefined intermediate code
	12		Intermediate code shortage
	13		Syntax stack overflow
	14		Syntax stack underflow
	15		Array type tag incomplete Tag [ARRAY]
	16		Element type tag incomplete Tag [ELEMENT]
	17		Macro JOB unregistered
	18		Input format error
	19		Date size over
	20		MIN value over
	21		MAX value over
	22		Operation expression error
	23		JOB call argument setting error
	24		Macro JOB call argument setting error
	25		Position vector setting error
	26		System error
	27		Soft key designate error
	28		Numerical input buffer overflow
	29		Real type data precision error
	30		Element format error
	35		[BOOL TYPE] data error
	36		[CHAR] data error
	37		[BYTETYPE] [BINARY] / HEXA-DECIMAL BYTE TYPE] data error
	38		[INTEGER TYPE] [DECIMAL EORD TYPE] data error

Error No.	Data	Message	Contents
3220	39		[BINARY/HEXADECIMAL WORD TYPE] data error
	40		[DOUBLE PRECISION TYPE] [DECIMAL DWORD TYPE] data error
	41		[BINARY/HEXADECIMAL WORD TYPE] data error
	42		[REAL TYPE] data error
	43		[LADDER SPECIAL TYPE] data error
	44		JCL text
	45		Invalid text
	46		[LABEL NAME] data error
	47		[JOB NAME] data error
	48		[STRING] data error
	49		[COMMENT] data error
	58		Invalid instruction/tag detection
3230	-	Syntax not matched	
3240	-	Undefined application	
3250	-	Cannot load this file	
3260	-	Excess input data	
3270	-	Cannot verify this file	
3280	-	Wrong welding condition (STANDARD/ ENHANCED)	
3290	-	Serial port not defined	
3300	-	Serial port being used	
3310	-	Protocol being used	
3320	-	Wrong GUN type	
3330	-	Undefined multilayer data	
3340	-	Illegal number of multilayer data	
3350	-	Not enough memory	
3360	-	Invalid directory	
3370	-	Incorrect directory name	

Error No.	Data	Message	Contents
3380	-	Drive not ready	
3390	-	File not found	
3400	-	File already exists on the media	
3410	-	Out of memory on the media	
3420	-	Max number of files has been reached	
3430	-	I/O error on the drive	
3440	-	Wrong media type	

11.1.5 Concurrent I/O

Error No.	Data	Message	Contents
4010	*	Illegal relay No.	
	XXX		Line No.
4020	*	Illegal block No.	
	XXX		Line No.
4030	*	Illegal instruction	
	XXX		Line No.
4040	*	Relay/register No. duplicated in OUT/ GOUT or arithmetic instruction	Plural output are instructed to the relay or register
	XXX		Line No.
4050	*	The relay is not used	
	XXX		Line No.
4060	*	Excess STR-[-NOT] instructions	
	XXX		Line No.
4070	*	Excess AND [OR] STR instructions	
	XXX		Line No.
4080	*	Syntax error in CNT instructions	
	XXX		Line No.
4090	*	Enter STR [-NOT] at head of block	Need STR [-NOT]
	XXX		Line No.
4100	*	Relay No. duplicated in TMR and CNT	Timer and counter are used twice
	XXX		Line No.
4110	-	Excessive ladder scan-time	Ladder scan time is too long
4120	-	Concurrent I/O memory is full	Exceeds memory capacity
4130	-	END instruction not found	END instruction not found
4140	-	Wrong ladder program	Position and number of PART instruction are wrong
4150	*	Wrong use of GSTR, GOUT commands	GSTR and GOUT is not used together
	XXX		Line No.
4160	-	Cannot edit system section	

Error No.	Data	Message	Contents
4170	-	Cannot modify/delete	
4180	-	Press INSERT/MODIFY/DELETE keys	
4190	-	Ladder program not found	
4200	-	Cannot specify system variables ($)	
4210	-	Cannot edit line	
4220	-	Excess TMR/CNT or arithmetic instructions	More than 100 TMR, CNT or arithmetic instruction used

11.1.6 Maintenance Mode

Error No.	Data	Message	Contents
8010	-	Too many axes	
8020	-	Too many I/O points	

YASNAC XRC
INSTRUCTIONS

TOKYO OFFICE
New Pier Takeshiba South Tower, 1-16-1, Kaigan, Minatoku, Tokyo 105-6891, Japan
Phone 81-3-5402-4511 Fax 81-3-5402-4580

MOTOMAN INC. HEADQUARTERS
805 Liberty Lane West Carrollton, OH 45449, U.S.A.
Phone 1-937-847-6200 Fax 1-937-847-6277

MOTOMAN INC. TROY FACILITY
1050 S. Dorset, Troy, OH 45373, U.S.A.
Phone 1-937-440-2600 Fax 1-937-440-2626

YASKAWA MOTOMAN CANADA LTD.
2280 Argentia Road, Mississauga, Ontario, L5N 6H8, Canada
Phone 1-905-813-5901 Fax 1-905-813-5911

YASKAWA ELECTRIC EUROPE GmbH
Am Kronberger Hang 2, 65824 Schwalbach,Germany
Phone 49-6196-569-300 Fax 49-6196-888-301

Motoman Robotics Europe AB
Box 504 S38525 Torsås, Sweden
Phone 46-486-48800 Fax 46-486-41410

Motoman Robotec GmbH
Kammerfeldstraβe1,85391 Allershausen, Germany
Phone 49-8166-900 Fax 49-8166-9039

YASKAWA ELECTRIC KOREA CORPORATION
Kfpa Bldg #1201, 35-4 Youido-dong, Yeongdungpo-Ku, Seoul 150-010, Korea
Phone 82-2-784-7844 Fax 82-2-784-8495

YASKAWA ELECTRIC (SINGAPORE) PTE. LTD.
151 Lorong Chuan, #04-01, New Tech Park Singapore 556741, Singapore
Phone 65-282-3003 Fax 65-289-3003

YATEC ENGINEERING CORPORATION
Shen Hsiang Tang Sung Chiang Building 10F 146 Sung Chiang Road, Taipei, Taiwan
Phone 886-2-2563-0010 Fax 886-2-2567-4677

BEIJING OFFIC
Room No. 301 Office Building of Beijing International Club, 21 Jianguomenwai Avenue, Beijing 100020, China
Phone 86-10-6532-1850 Fax 86-10-6532-1851

SHANGHAI OFFICE
27 Hui He Road Shanghai 200437 China
Phone 86-21-6553-6600 Fax 86-21-6531-4242

YASKAWA JASON (HK) COMPANY LIMITED
Rm. 2909-10, Hong Kong Plaza, 186-191 Connaught Road West, Hong Kong
Phone 852-2803-2385 Fax 852-2547-5773

TAIPEI OFFICE
Shen Hsiang Tang Sung Chiang Building 10F 146 Sung Chiang Road,Taipei, Taiwan
Phone 886-2-2563-0010 Fax 886-2-2567-4677

BEIJING YASKAWA BEIKE AUTOMATION ENGINEERING CO.,LTD.
30 Xue Yuan Road, Haidian, Beijing 100083, China
Phone 86-10-6233-2782 Fax 86-10-6232-1536

SHOUGANG MOTOMAN ROBOT CO., LTD.
7,Yongchang-North Street, Beijing Economic Technological Investment & Development Area,
Beijing 100076, P.R. China
Phone 86-10-6788-0551 Fax 86-10-6788-2878

YASKAWA ELECTRIC CORPORATION

YASKAWA

Specifications are subject to change without notice
for ongoing product modifications and improvements.

MANUAL NO. RE-CTO-A203 ②

© Printed in Japan December 1999 98-12

CUSTOMER :

MACHINE : (PAGE2)

ELEMENTARY DIAGRAM OF YASNAC XRC FOR NORTH AMERICA SPEC.(NAS)

PAGE	NOTE	NAME	REVISION
1 /		CONTENTS	
2 /		LIST OF REFERENCE	
3 /		SYSTEM CONNECTION DIAGRAM	
4 /		MAIN POWER : QS1,T1,QF1	
5 /		MAIN POWER : JZRCR-XPU09,QF2	
6 /		BRAKE RELEASE: JARCR-XFL02	
7 /		JZNC-XIU01(1/8) : JANCD-XTU01(1/4)	
8 /		JZNC-XIU01(2/8) : JANCD-XTU01(2/4)	
9 /		JZNC-XIU01(3/8) : JANCD-XTU01(3/4)	
10 /		1SV(1/8):1CV(CONVERTER),1GS(DC POWER SUPPLY)	
11 /		1SV(2/8) : S-AXIS 1AMP	
12 /		1SV(3/8): L-AXIS 2AMP	
13 /		1SV(4/8): U-AXIS 3AMP	
14 /		1SV(5/8): R-AXIS 4AMP	
15 /		1SV(6/8): B-AXIS 5AMP	
16 /		1SV(7/8): T-AXIS 6AMP	
17 /		1SV(8/8): JASP-WRCA01	
18 /		JZNC-XRK01B-1(1/2): JANCD-XBB01(1/2),XCP01-1(1/2),2GS	
19 /		JZNC-XRK01B-1(2/2): JANCD-XBB01(2/2),XCP01-1(2/2)	
20 /		JZNC-XIU01(4/8) : JANCD-XI001,XTU01(4/4),XI002(1/5)	
21 /		JZNC-XIU01(5/8) : JANCD-XI002(2/5)	
22 /		JZNC-XIU01(6/8) : JANCD-XI002(3/5)	
23 /		JZNC-XIU01(7/8) : JANCD-XI002(4/5)	
24 /		JZNC-XIU01(8/8) : JANCD-XI002(5/5)	
25 /		PLAYBACK PANEL (ZY1C-SS3152)	
26 /		PROGRAMMING PENDANT (JZNC-XPP02)	
27 /		JANCD-XEW01-1(OPTION)	
28 /			
29 /			
30 /			

LIST OF ADDED PAGE

PAGE	NOTE	NAME	REVISION
/			
/			
/			
/			
/			
/			
/			
/			
/			

Revisions:

YASKAWA

Draw.
Check.
Appr.

YASNAC XRC ELEMENTARY DIAGRAM

CONTENTS

HE9303468 1/27

Dwg.No. HE9303468-1/27

TABLE OF REFERENCE DIAGRAMS

No.	DRAW No.	NAME	REVISION
1	HB9280	MAIN CONTROL BOX DIMENSION DIAGRAM	
2			
3			
4			
5			
6			
7			
8			
9			
10			

OPTION LIST

No.	NAME	PAGE
1		
2		
3		
4		
5		
6		
7		
8		
9		
10		

TYPE LIST

No.	XRC TYPE	ROBOT TYPE	AC POWER	QS1	FU1~3	QF1	QF2	1KM	SERVO PACK	NOTE
1	ERCR-SV3-RB00	SV3X	1kVA	194R-NC030P3	5A	CP33FS-10D	CP33FS-5D	SC-5-1 Z845 SZ-A11	CACR-SV3AAA	
2										
3										
4										
5										
6										

Revisions:

YASKAWA

Draw.	Check.	Appr.

YASNAC XRC ELEMENTARY DIAGRAM

LIST OF REFERENCE

HE9303468 2/27

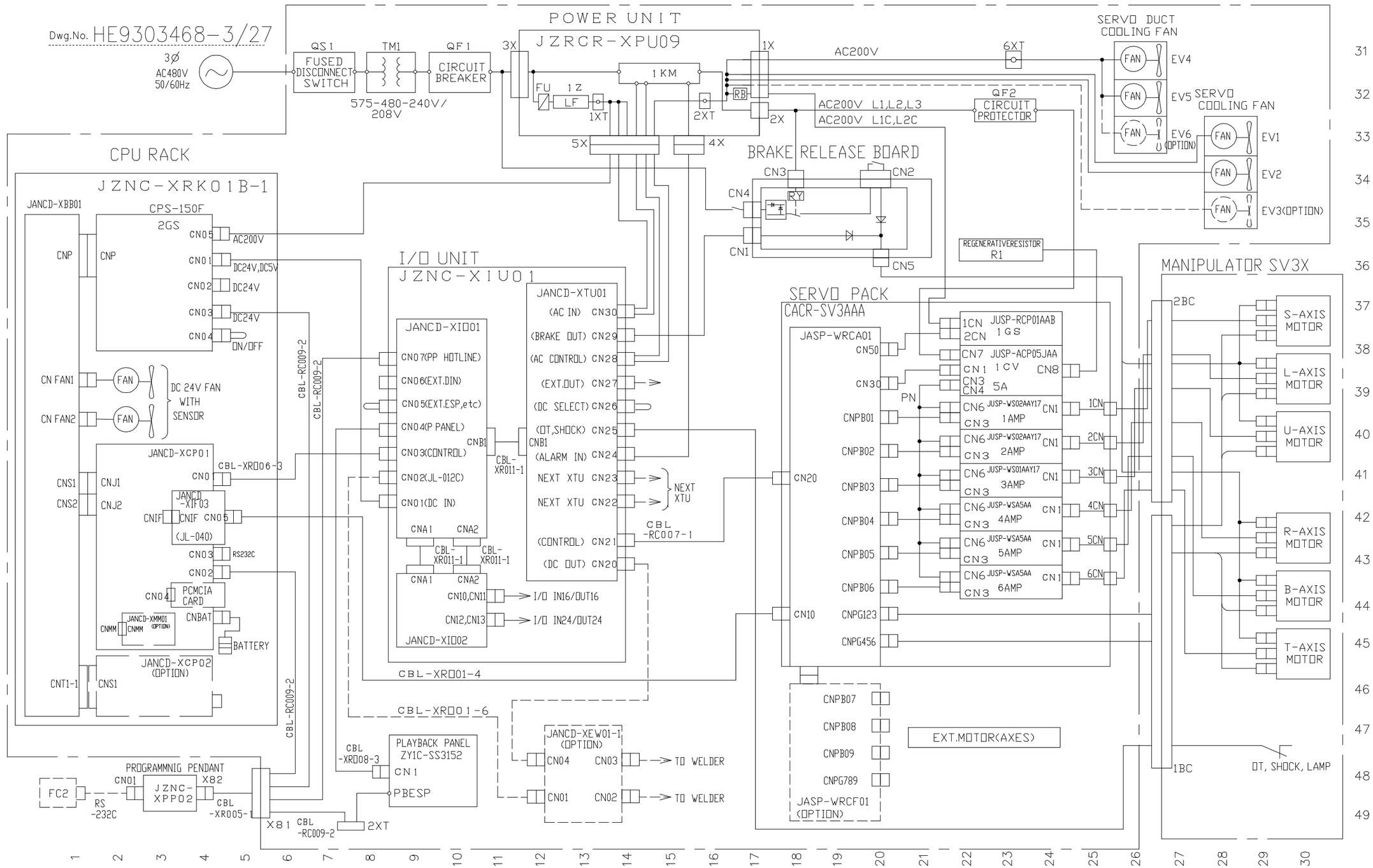

Revisions:	YASKAWA	Draw. / Check. / Appr.	YASNAC XRC ELEMENTARY DIAGRAM SYSTEM CONNECTION DIAGRAM	HE9303468 3/27

Dwg.No. HE9303468-4/27

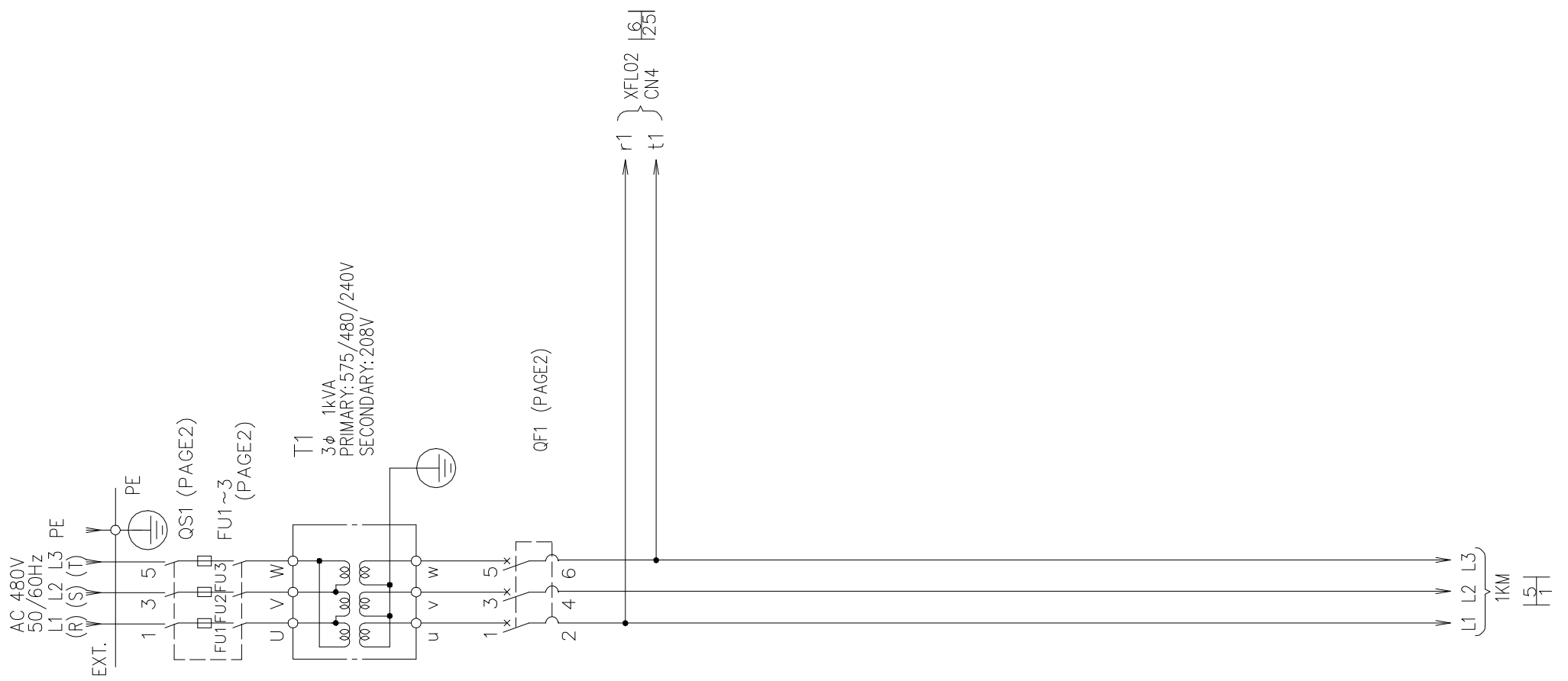

Revisions:	YASKAWA	Draw. / Check. / Appr.	YASNAC XRC ELEMENTARY DIAGRAM MAIN POWER : QS1,T1,QF1	HE9303468 4/27

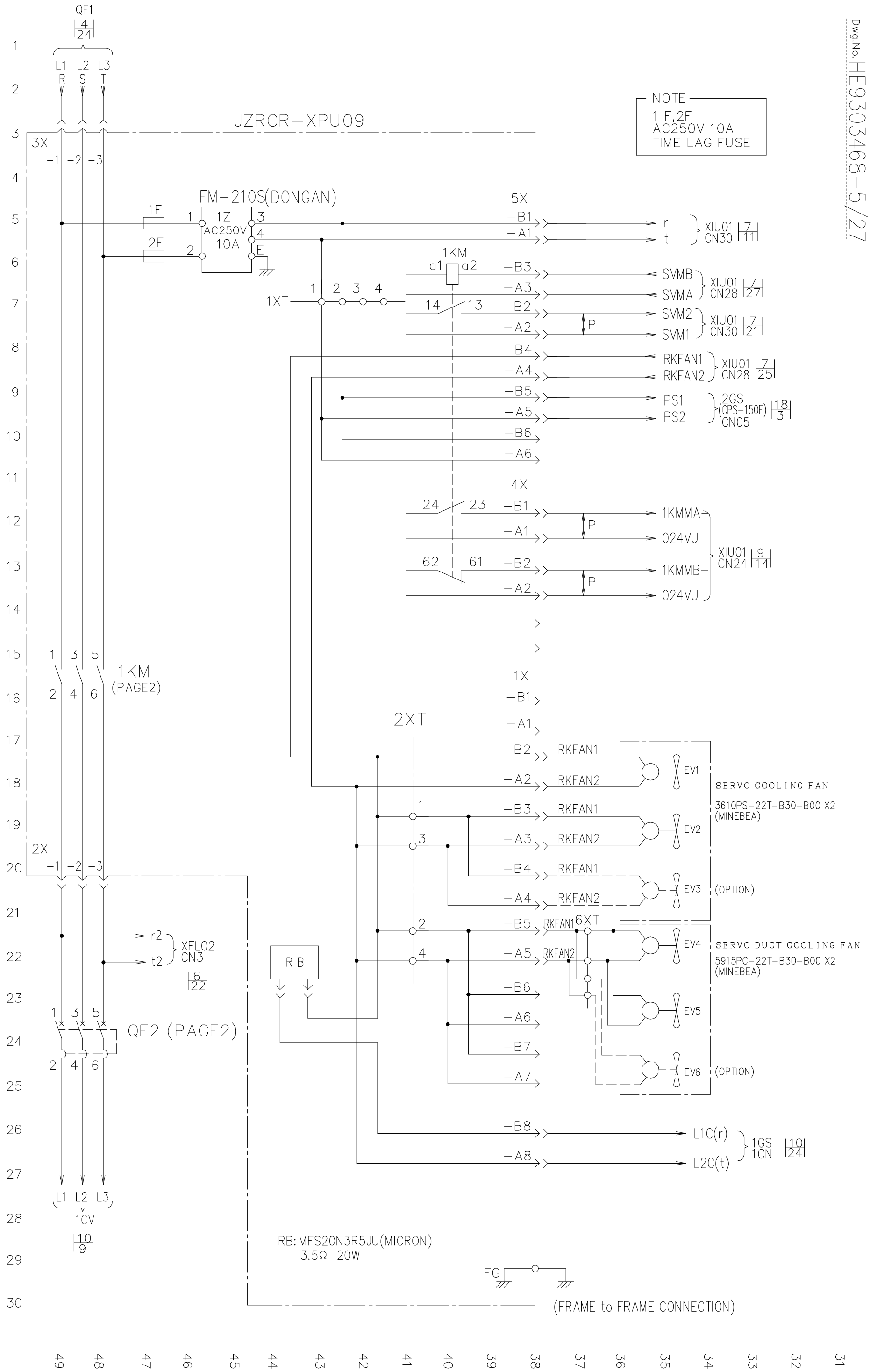

NOTE
1 F,2F
AC250V 10A
TIME LAG FUSE

Dwg.No. HE9303468-5/27

Revisions:

YASKAWA

Draw.
Check.
Appr.

YASNAC XRC
ELEMENTARY DIAGRAM
MAIN POWER : JZRCR-XPU09,QF2

HE9303468 5/27

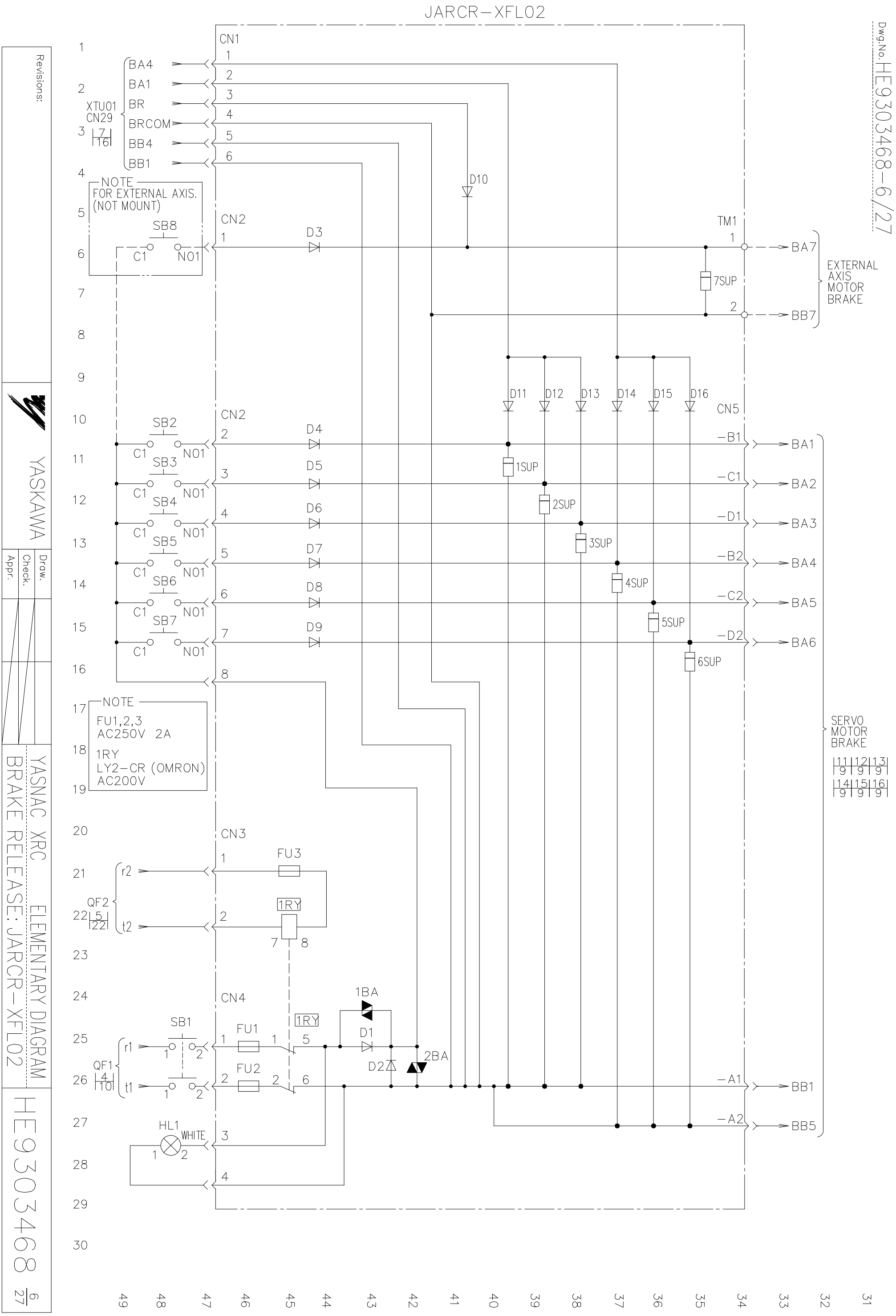
JARCR-XFL02
Dwg.No. HE9303468-6/27
Revisions:
YASKAWA
Draw.
Check.
Appr.
YASNAC XRC
ELEMENTARY DIAGRAM
BRAKE RELEASE: JARCR-XFL02
HE9303468 6/27
CN1
XTU01
CN29
BA4
BA1
BR
BRCOM
BB4
BB1
NOTE
FOR EXTERNAL AXIS.
(NOT MOUNT)
SB8
C1
NO1
CN2
D3
D10
TM1
7SUP
BA7
BB7
EXTERNAL
AXIS
MOTOR
BRAKE
D11
D12
D13
D14
D15
D16
CN5
SB2
SB3
SB4
SB5
SB6
SB7
D4
D5
D6
D7
D8
D9
1SUP
2SUP
3SUP
4SUP
5SUP
6SUP
-B1
-C1
-D1
-B2
-C2
-D2
BA1
BA2
BA3
BA4
BA5
BA6
SERVO
MOTOR
BRAKE
NOTE
FU1,2,3
AC250V 2A
1RY
LY2-CR (OMRON)
AC200V
CN3
FU3
QF2
r2
t2
1RY
CN4
SB1
FU1
FU2
QF1
r1
t1
1BA
D1
D2
2BA
-A1
-A2
BB1
BB5
HL1
WHITE

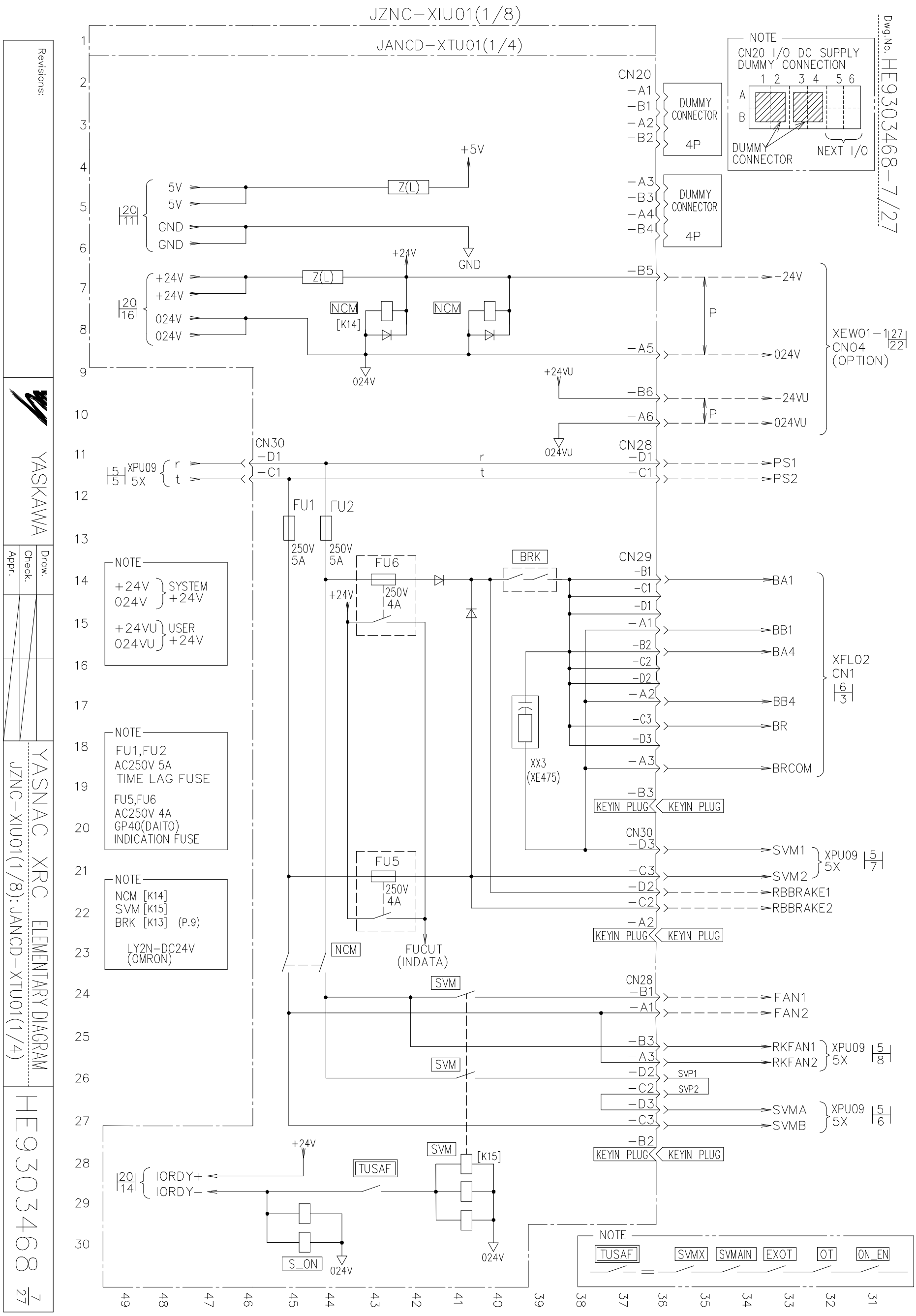
JZNC-XIU01(1/8)
JANCD-XTU01(1/4)
Dwg.No. HE9303468-7/27
NOTE
CN20 I/O DC SUPPLY
DUMMY CONNECTION
DUMMY CONNECTOR
NEXT I/O
CN20
DUMMY CONNECTOR 4P
DUMMY CONNECTOR 4P
XEW01-1 27/22
CN04
(OPTION)
XPU09 5X
CN30
CN28
PS1
PS2
FU1
FU2
250V 5A
FU6
250V 4A
FU5
BRK
CN29
BA1
BB1
BA4
BB4
BR
BRCOM
XFL02
CN1
XX3
(XE475)
KEYIN PLUG
SVM1
SVM2
RBBRAKE1
RBBRAKE2
NCM
[K14]
[K15]
FUCUT
(INDATA)
SVM
FAN1
FAN2
RKFAN1
RKFAN2
SVP1
SVP2
SVMA
SVMB
IORDY+
IORDY-
TUSAF
S_ON
NOTE
FU1,FU2
AC250V 5A
TIME LAG FUSE
FU5,FU6
AC250V 4A
GP40(DAITO)
INDICATION FUSE
NOTE
NCM [K14]
SVM [K15]
BRK [K13] (P.9)
LY2N-DC24V
(OMRON)
NOTE
+24V 024V SYSTEM +24V
+24VU 024VU USER +24V
NOTE
TUSAF SVMX SVMAIN EXOT OT ON_EN
Revisions:
YASKAWA
Draw.
Check.
Appr.
YASNAC XRC ELEMENTARY DIAGRAM
JZNC-XIU01(1/8): JANCD-XTU01(1/4)
HE9303468 7/27

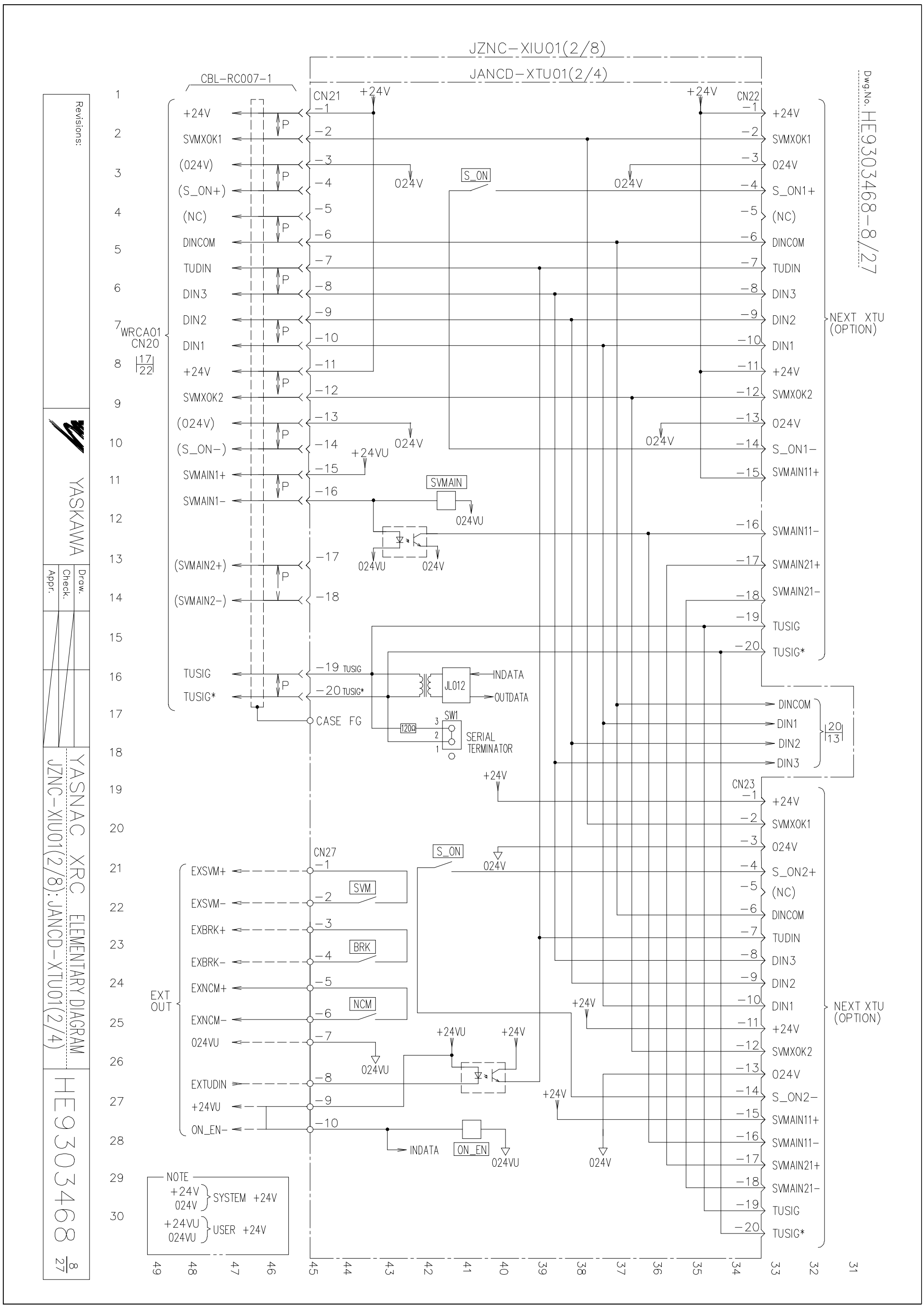
JZNC-XIU01(2/8)
JANCD-XTU01(2/4)
CBL-RC007-1
CN21
CN22
CN23
CN27
WRCA01
CN20
NEXT XTU
(OPTION)
EXT
OUT
S_ON
SVMAIN
SVM
BRK
NCM
ON_EN
JL012
SW1
SERIAL
TERMINATOR
120Ω
INDATA
OUTDATA
CASE FG
NOTE
+24V
024V
SYSTEM +24V
+24VU
024VU
USER +24V
YASKAWA
YASNAC XRC ELEMENTARY DIAGRAM
JZNC-XIU01(2/8); JANCD-XTU01(2/4)
HE9303468 8/27
Dwg.No. HE9303468-8/27
Revisions:
Draw.
Check.
Appr.

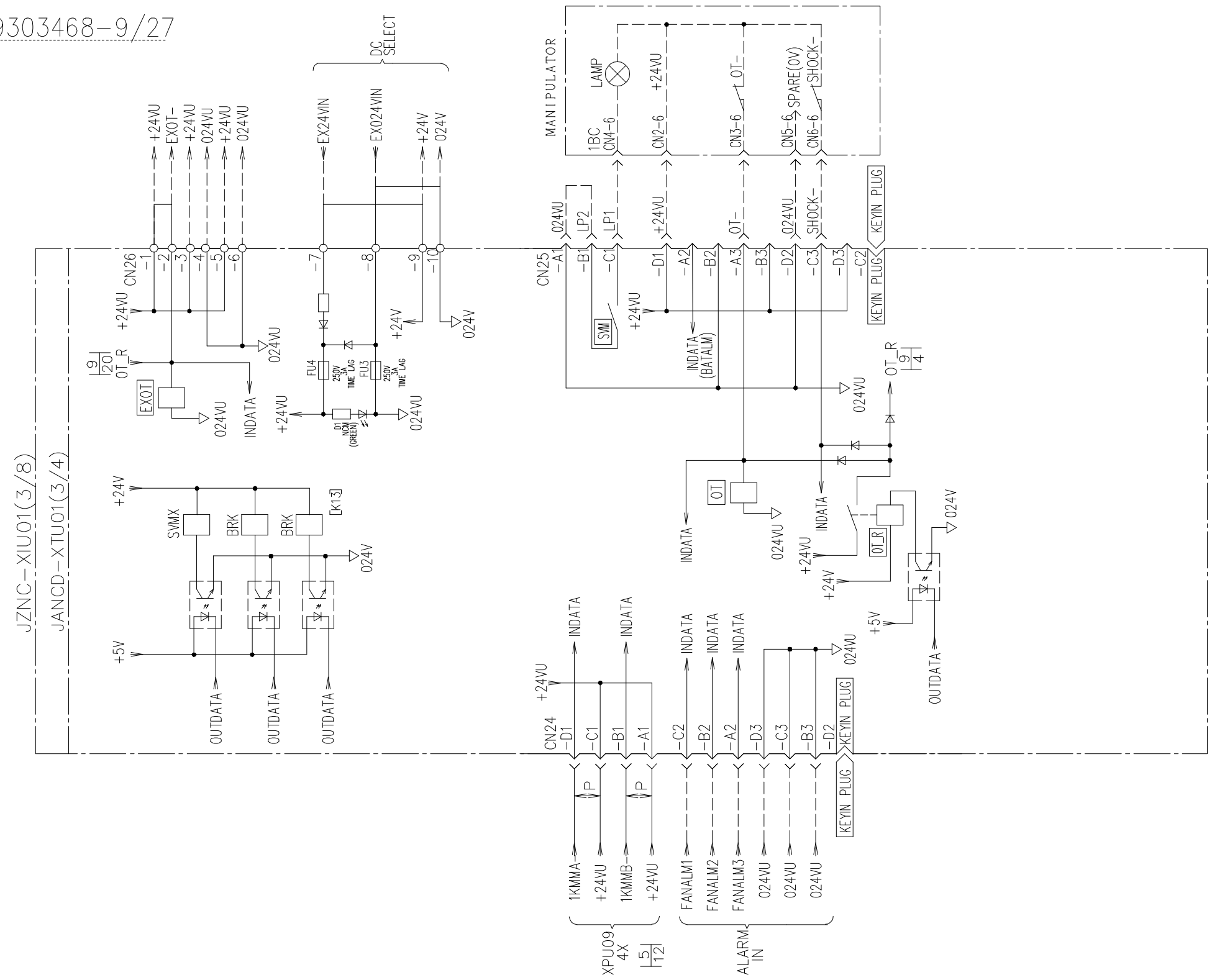

Revisions:	YASKAWA	Draw. / Check. / Appr.	YASNAC XRC ELEMENTARY DIAGRAM JZNC-XIU01(3/8): JANCD-XTU01(3/4)	HE9303468 9/27

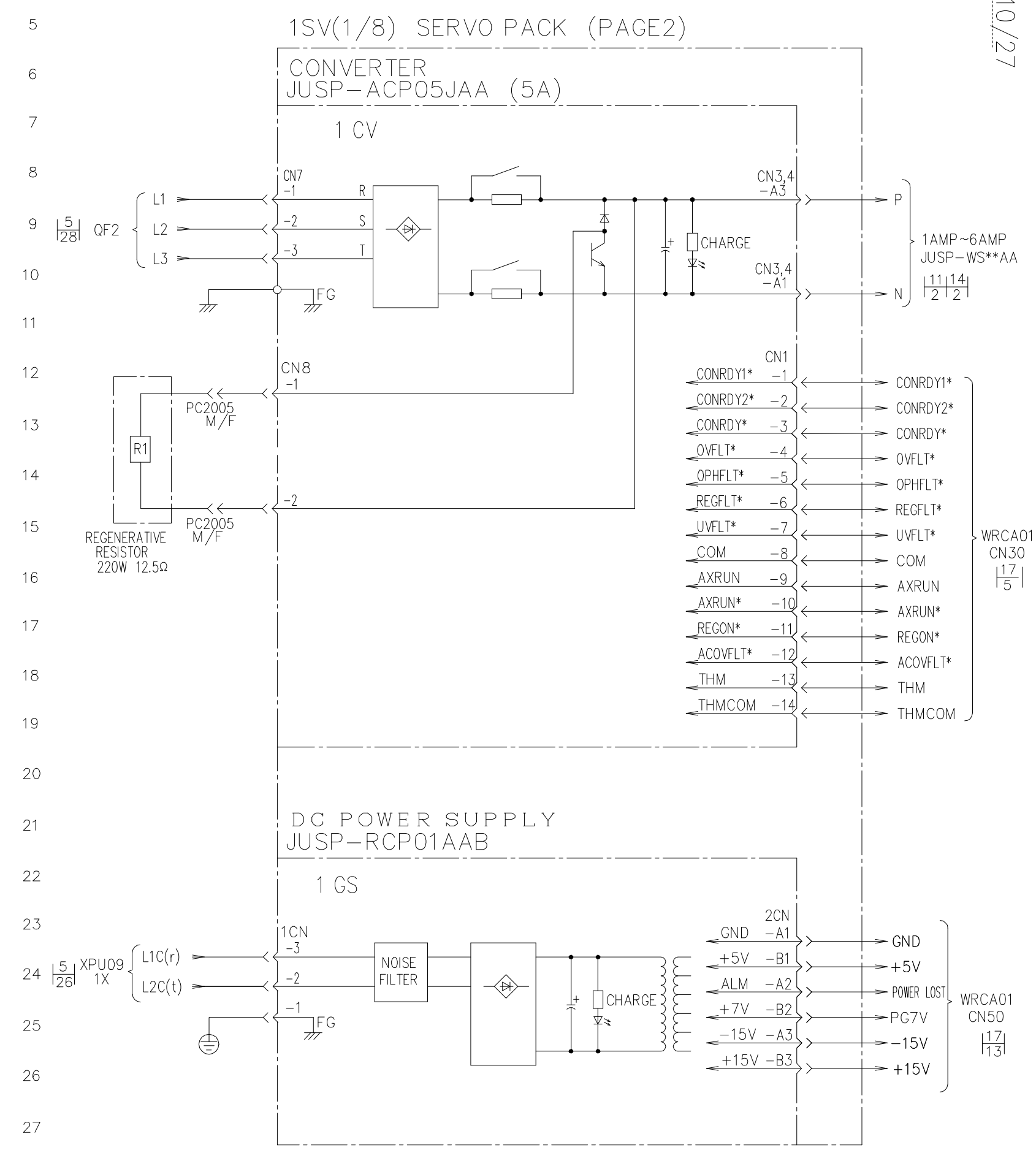

Dwg.No. HE9303468-10/27

Revisions:

YASKAWA

Draw.
Check.
Appr.

YASNAC XRC ELEMENTARY DIAGRAM

1SV(1/8):1CV(CONVERTER),1GS

HE9303468 10/27

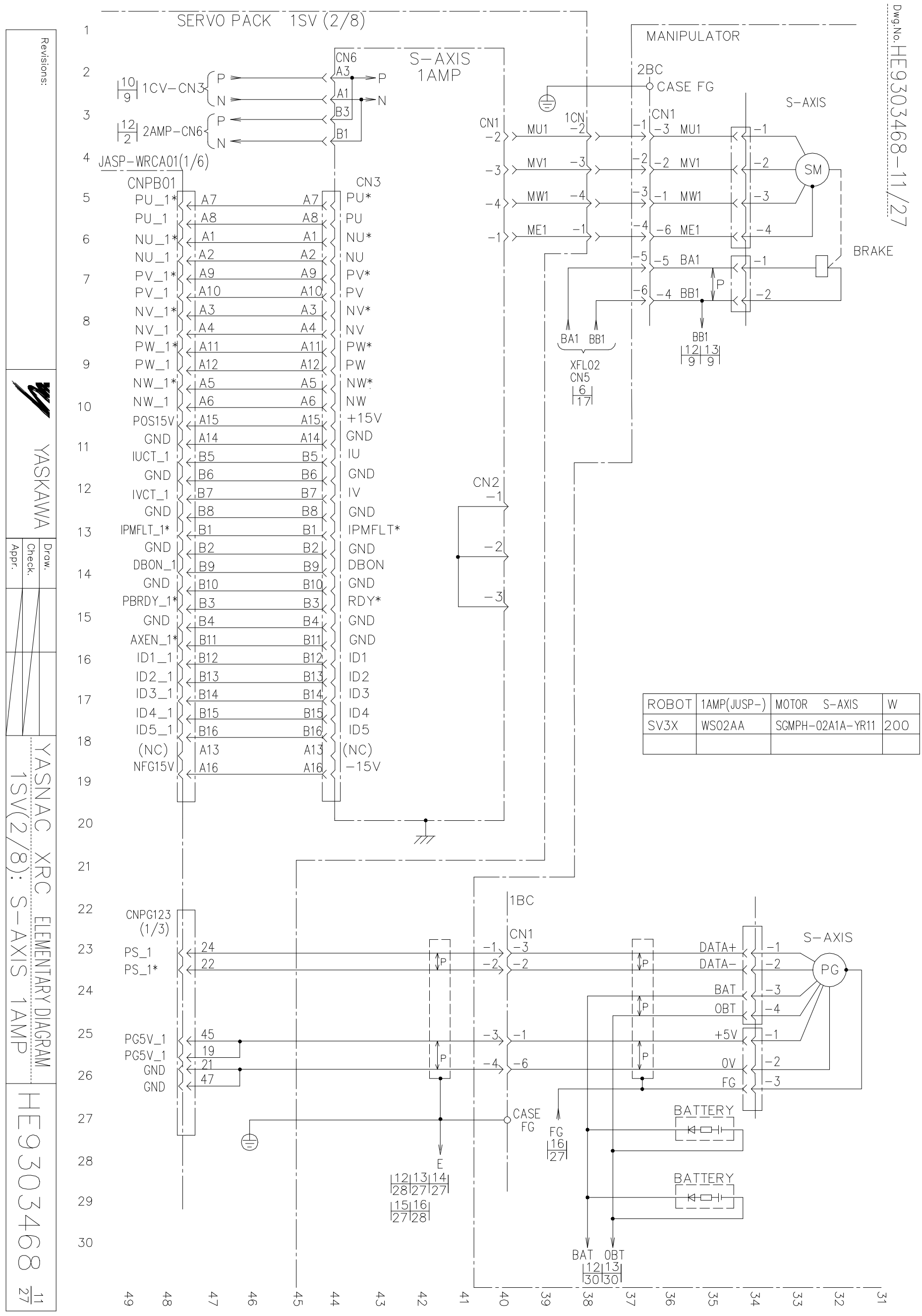

ROBOT	1AMP(JUSP-)	MOTOR S-AXIS	W
SV3X	WS02AA	SGMPH-02A1A-YR11	200

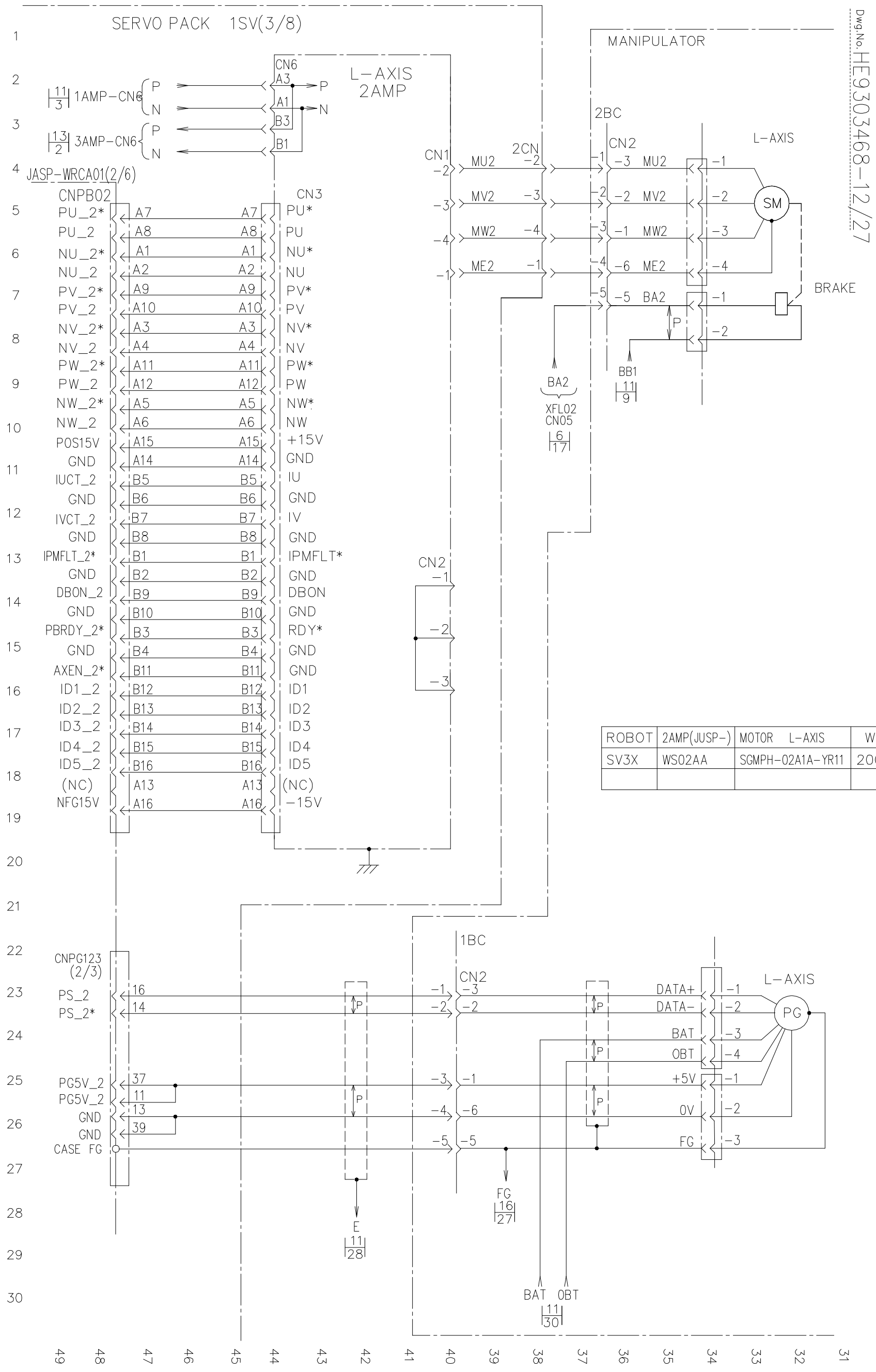

ROBOT	2AMP(JUSP-)	MOTOR L-AXIS	W
SV3X	WS02AA	SGMPH-02A1A-YR11	200

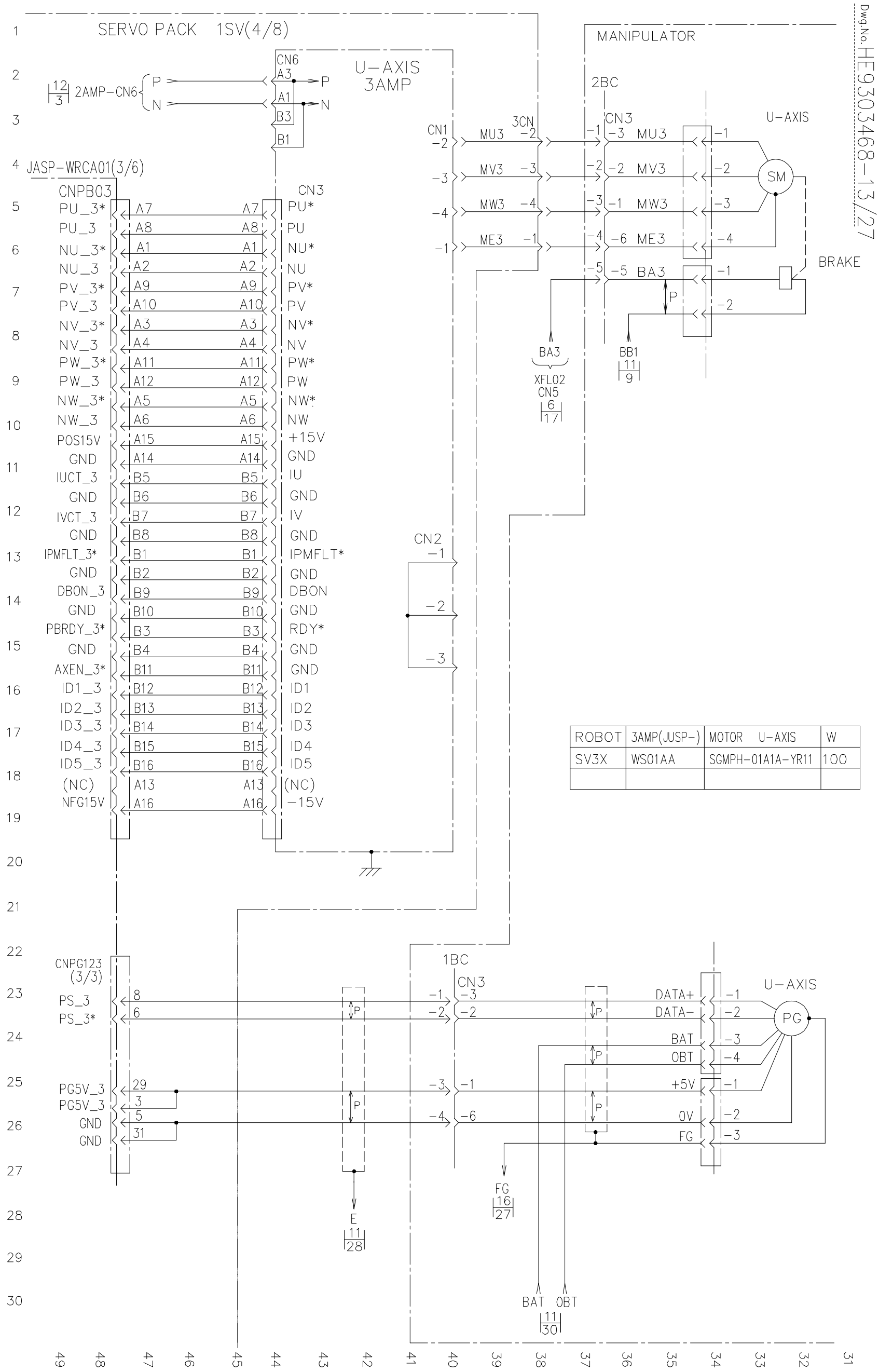

ROBOT	3AMP(JUSP-)	MOTOR U-AXIS	W
SV3X	WS01AA	SGMPH-01A1A-YR11	100

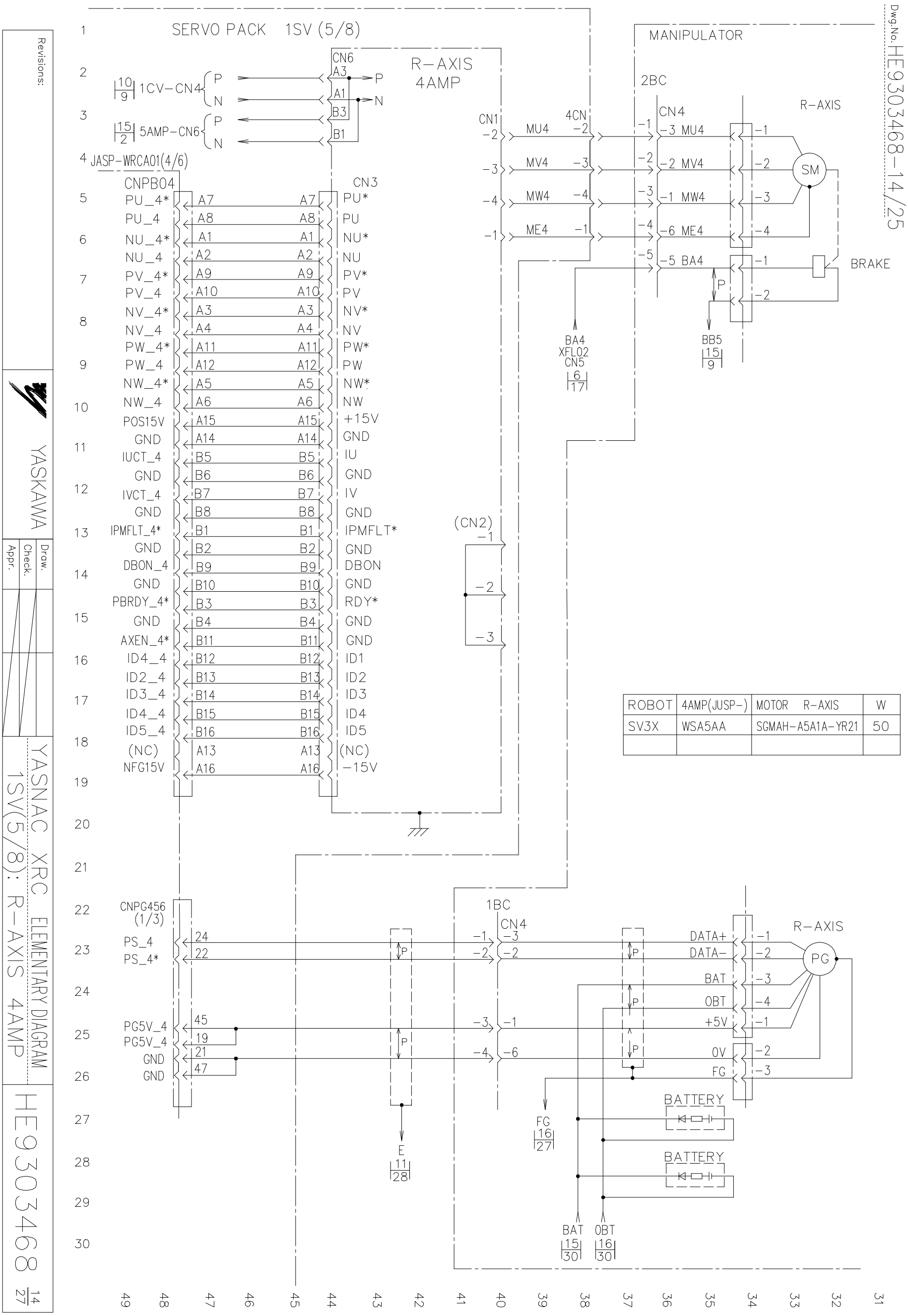

ROBOT	4AMP(JUSP-)	MOTOR R-AXIS	W
SV3X	WSA5AA	SGMAH-A5A1A-YR21	50

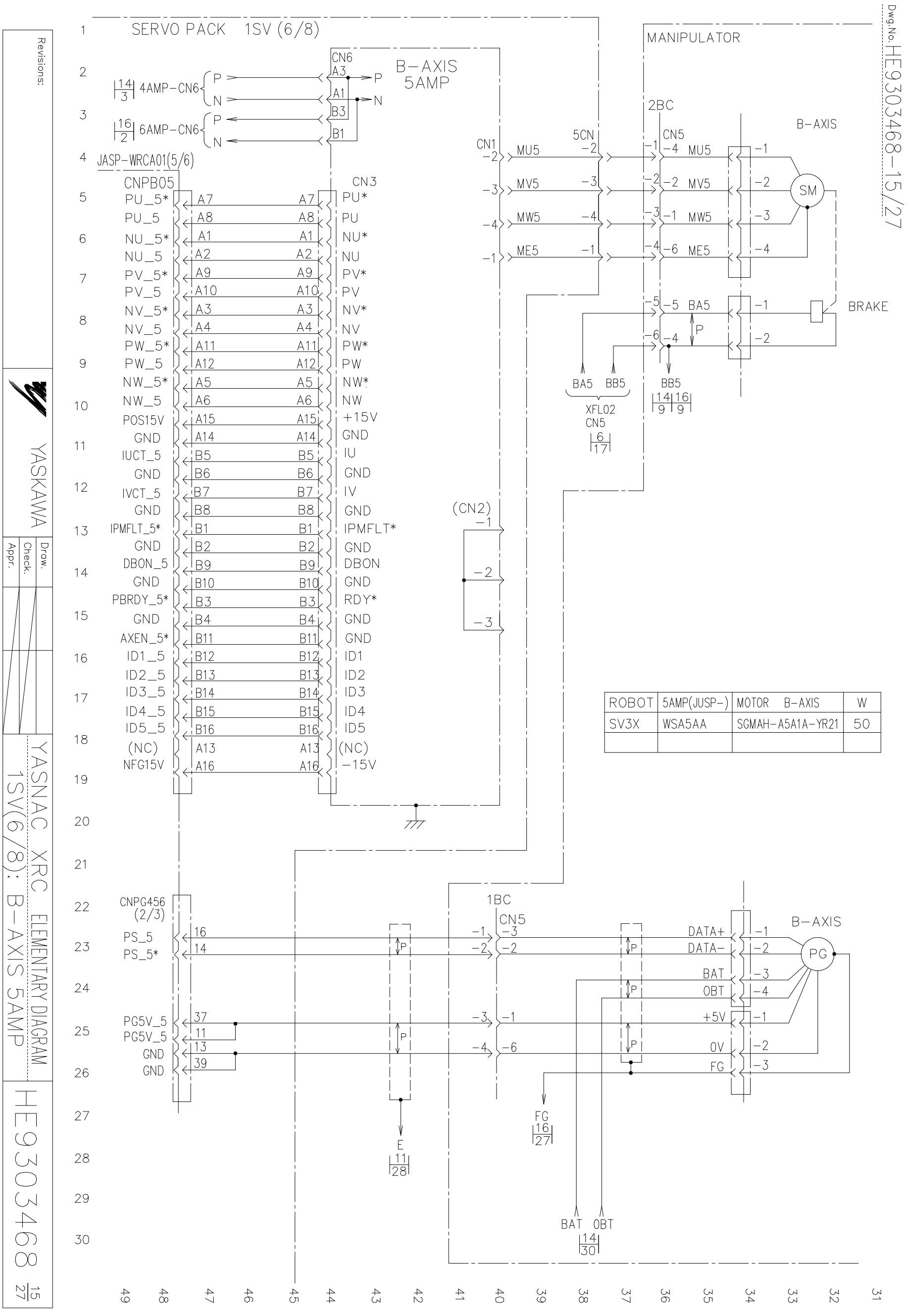

ROBOT	5AMP(JUSP-)	MOTOR B-AXIS	W
SV3X	WSA5AA	SGMAH-A5A1A-YR21	50

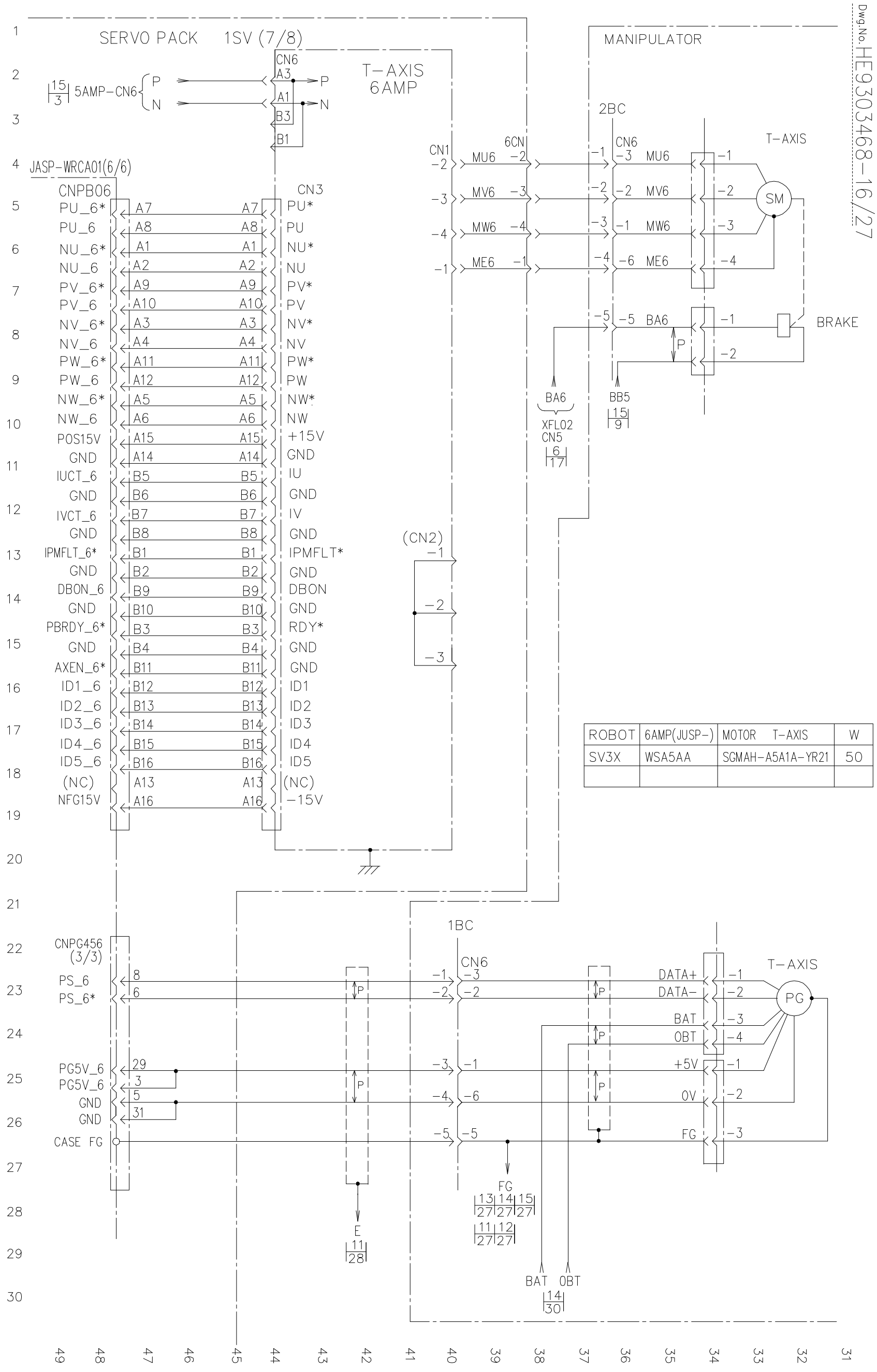

ROBOT	6AMP(JUSP-)	MOTOR T-AXIS	W
SV3X	WSA5AA	SGMAH-A5A1A-YR21	50

Revisions:

YASKAWA

Draw. Check. Appr.

YASNAC XRC ELEMENTARY DIAGRAM
1SV(7/8): T-AXIS 6AMP

HE9303468 16/27

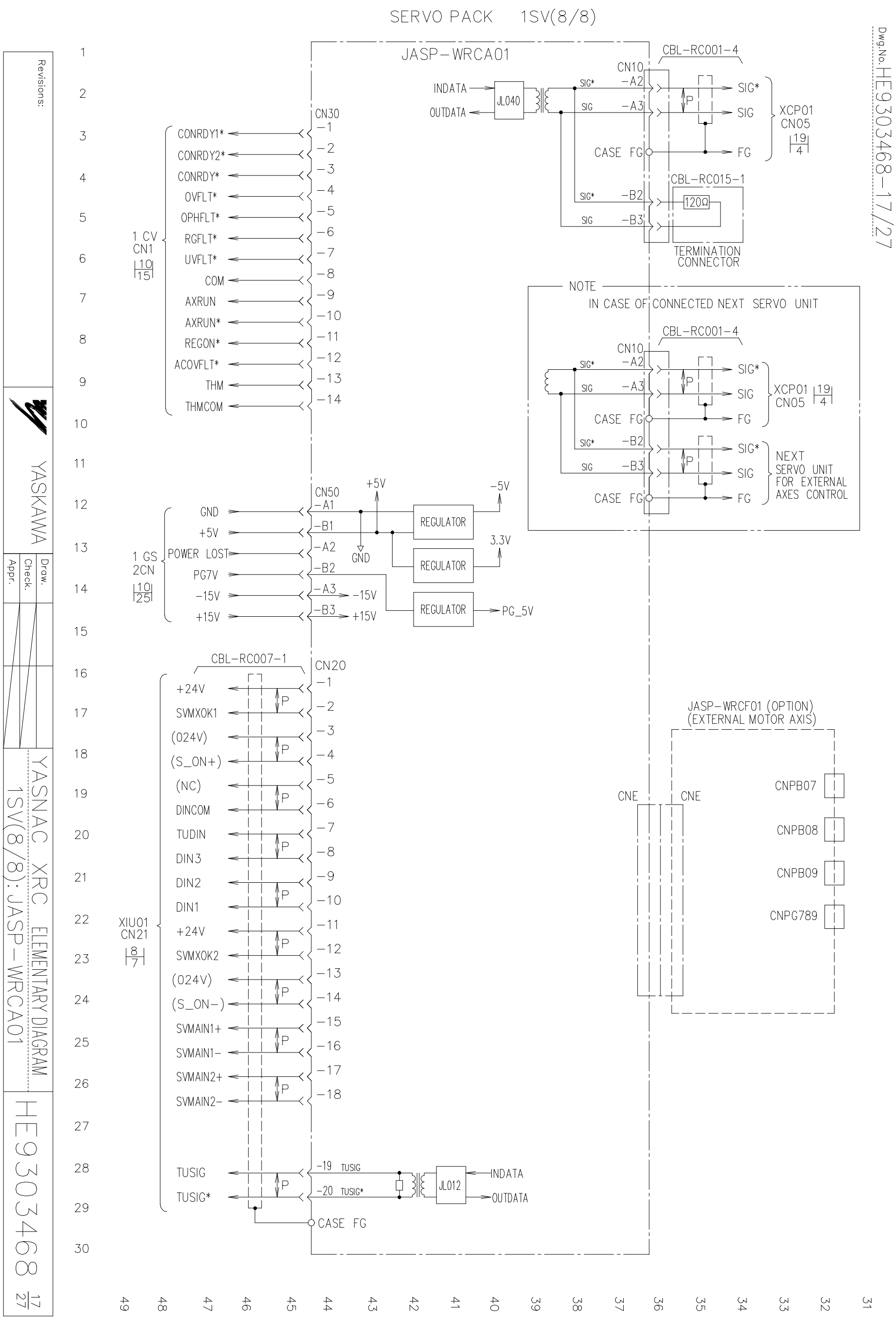

Dwg.No. HE9303468-17/27

Revisions:

YASKAWA

Draw.
Check.
Appr.

YASNAC XRC ELEMENTARY DIAGRAM
1SV(8/8): JASP-WRCA01

HE9303468 17/27

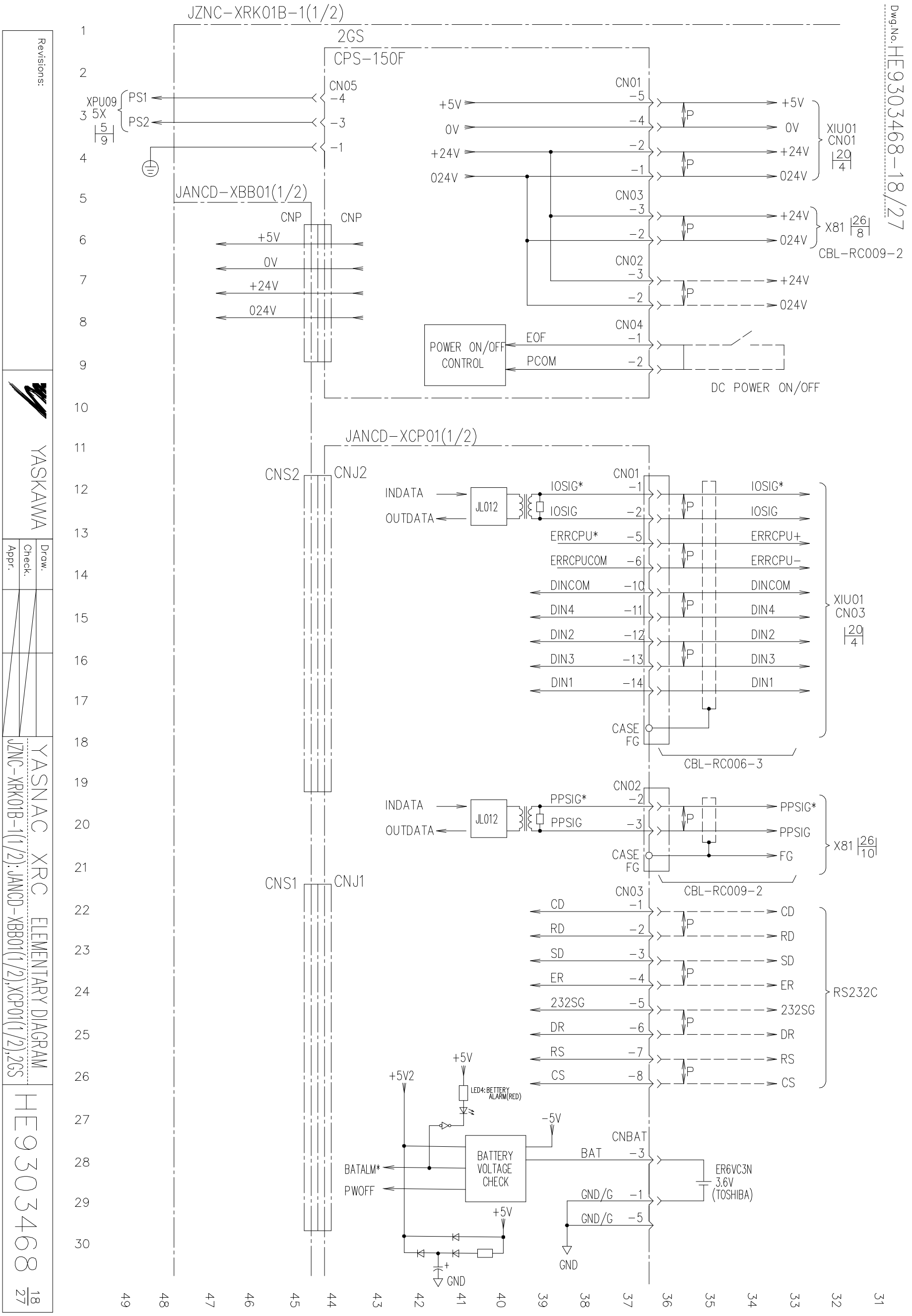

Revisions:

YASKAWA

Draw.
Check.
Appr.

YASNAC XRC ELEMENTARY DIAGRAM

JZNC-XRK01B-1(1/2); JANCD-XBB01(1/2),XCP01(1/2),2GS

HE9303468 18/27

Dwg.No. HE9303468-18/27

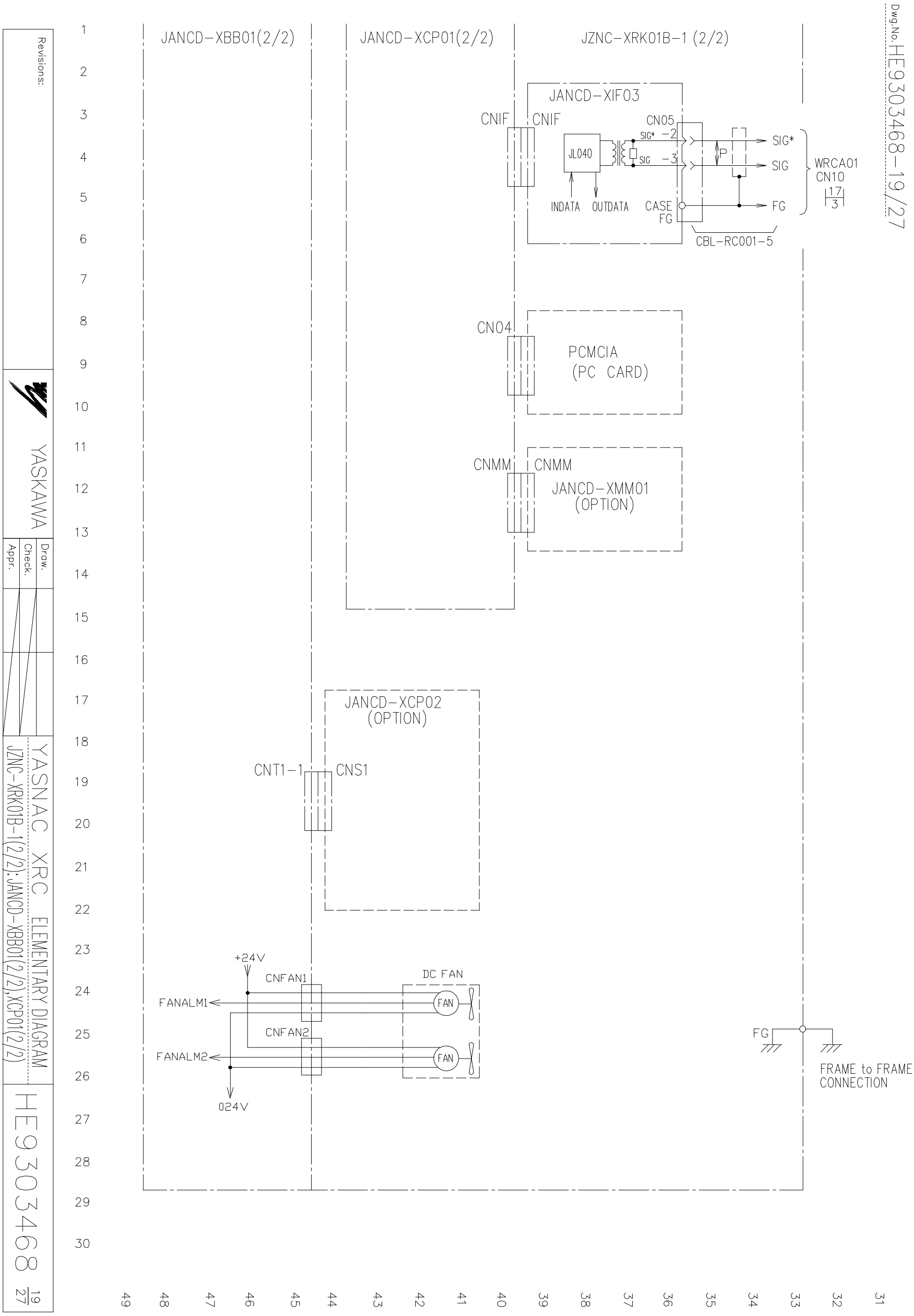

Dwg.No. HE9303468-19/27

Revisions:

YASKAWA

Draw.
Check.
Appr.

YASNAC XRC ELEMENTARY DIAGRAM

JZNC-XRK01B-1(2/2);JANCD-XBB01(2/2),XCP01(2/2)

HE9303468 19/27

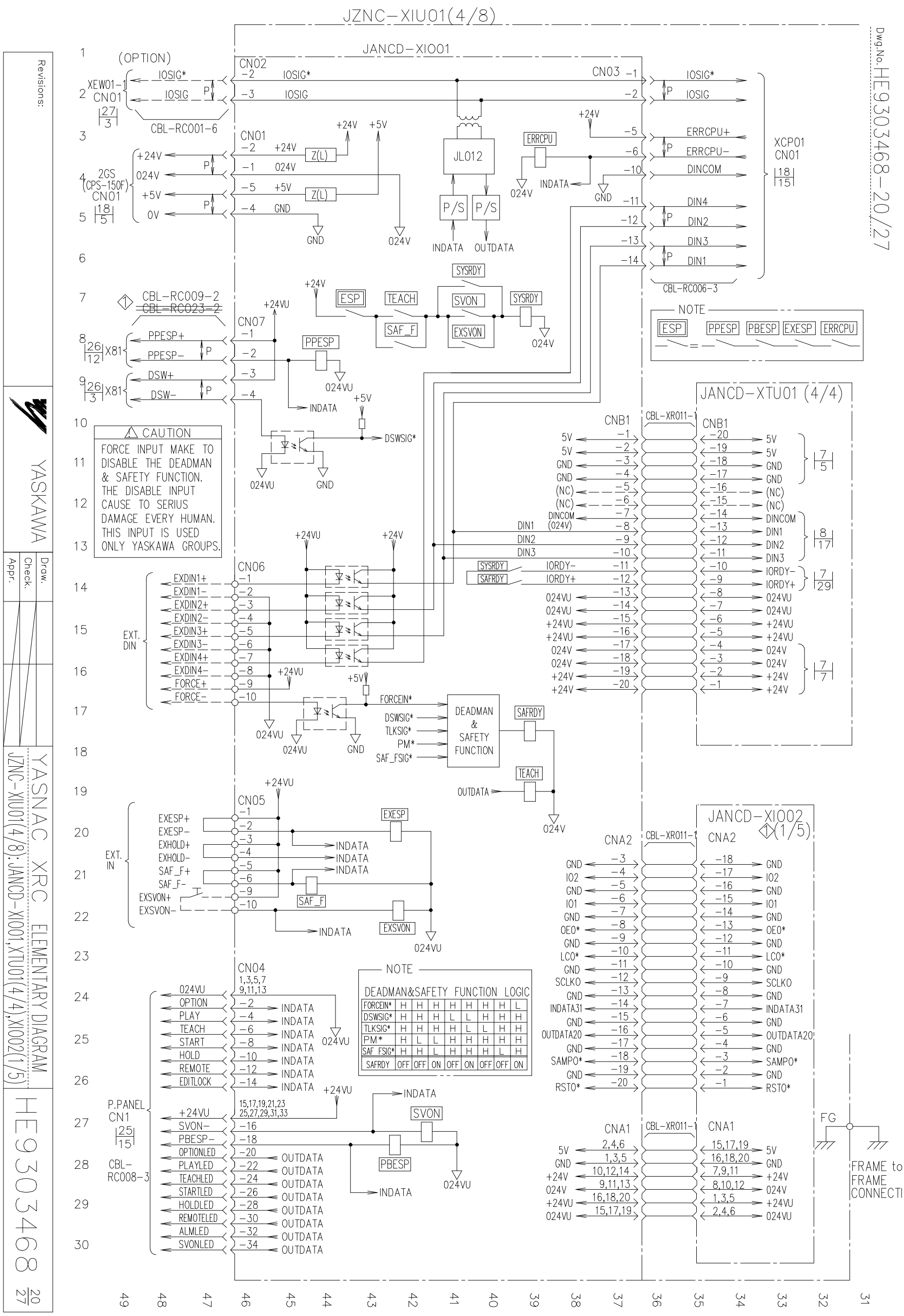

Revisions:

YASKAWA

Draw.
Check.
Appr.

YASNAC XRC ELEMENTARY DIAGRAM

JZNC-XIU01(4/8);JANCD-XIO01,XTU01(4/4),XIO02(1/5)

HE9303468 20/27

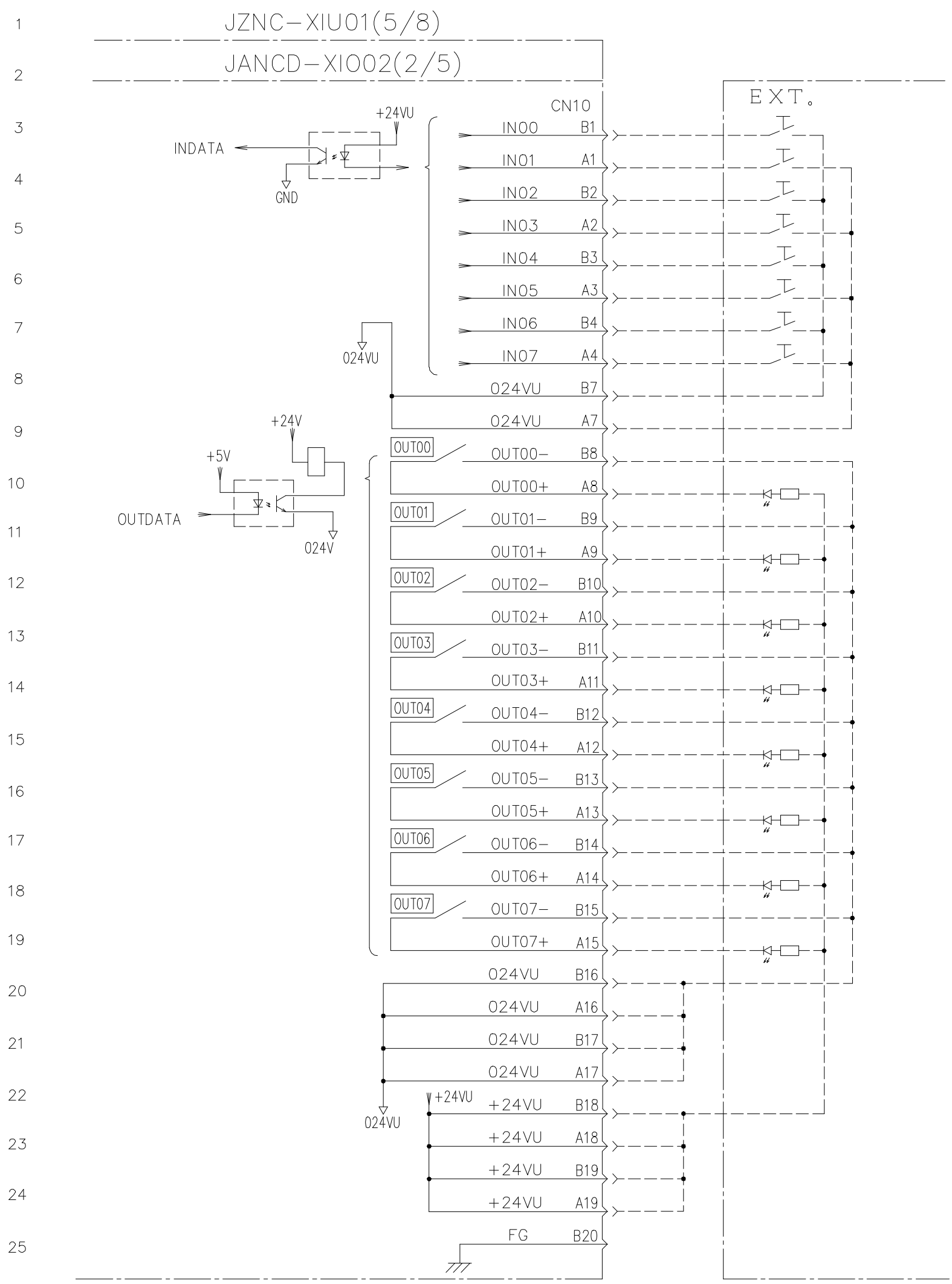

Dwg.No. HE9303468-21/27

Revisions:

YASKAWA

Draw.
Check.
Appr.

YASNAC XRC ELEMENTARY DIAGRAM
JZNC-XIU01(5/8); JANCD-XIO02(2/5)

HE9303468 21/27

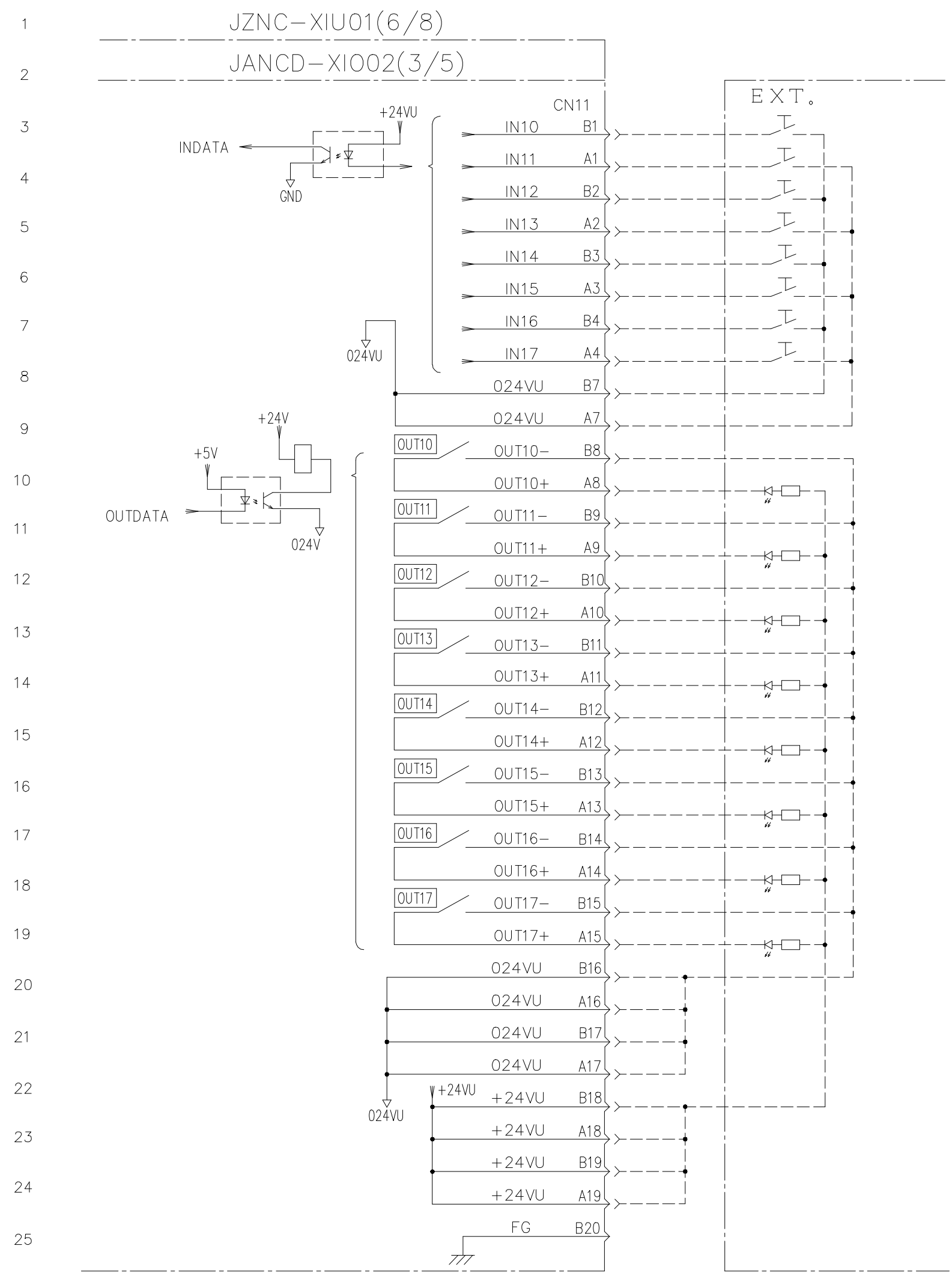

Dwg.No. HE9303468-22/27

Revisions:

YASKAWA

Draw.
Check.
Appr.

YASNAC XRC ELEMENTARY DIAGRAM
JZNC-XIU01(6/8); JANCD-XIO02(3/5)

HE9303468 22/27

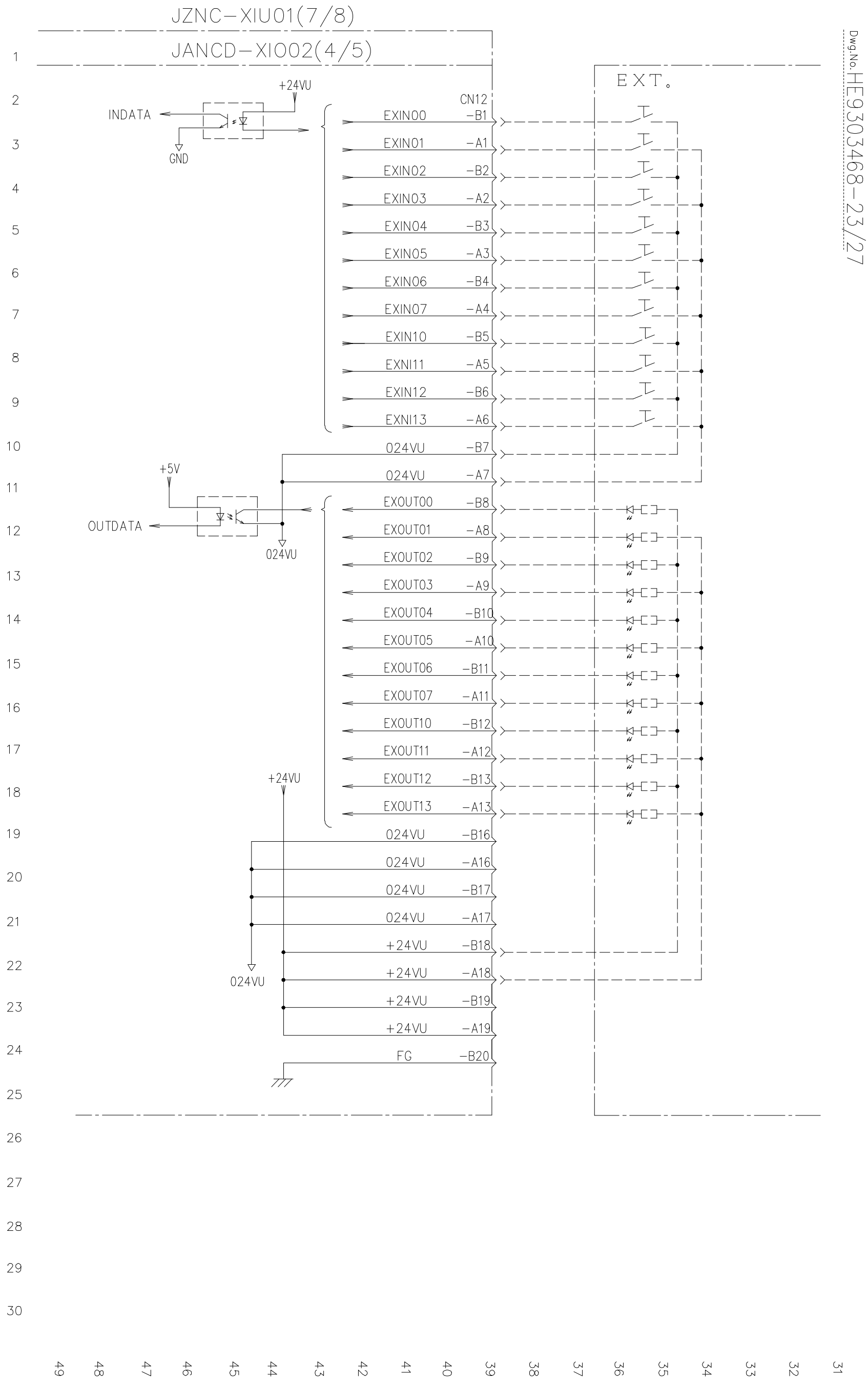

Dwg.No. HE9303468-23/27

Revisions:

YASKAWA

Draw.
Check.
Appr.

YASNAC XRC ELEMENTARY DIAGRAM

JZNC-XIU01(7/8);JANCD-XIO02(4/5)

HE9303468 23/27

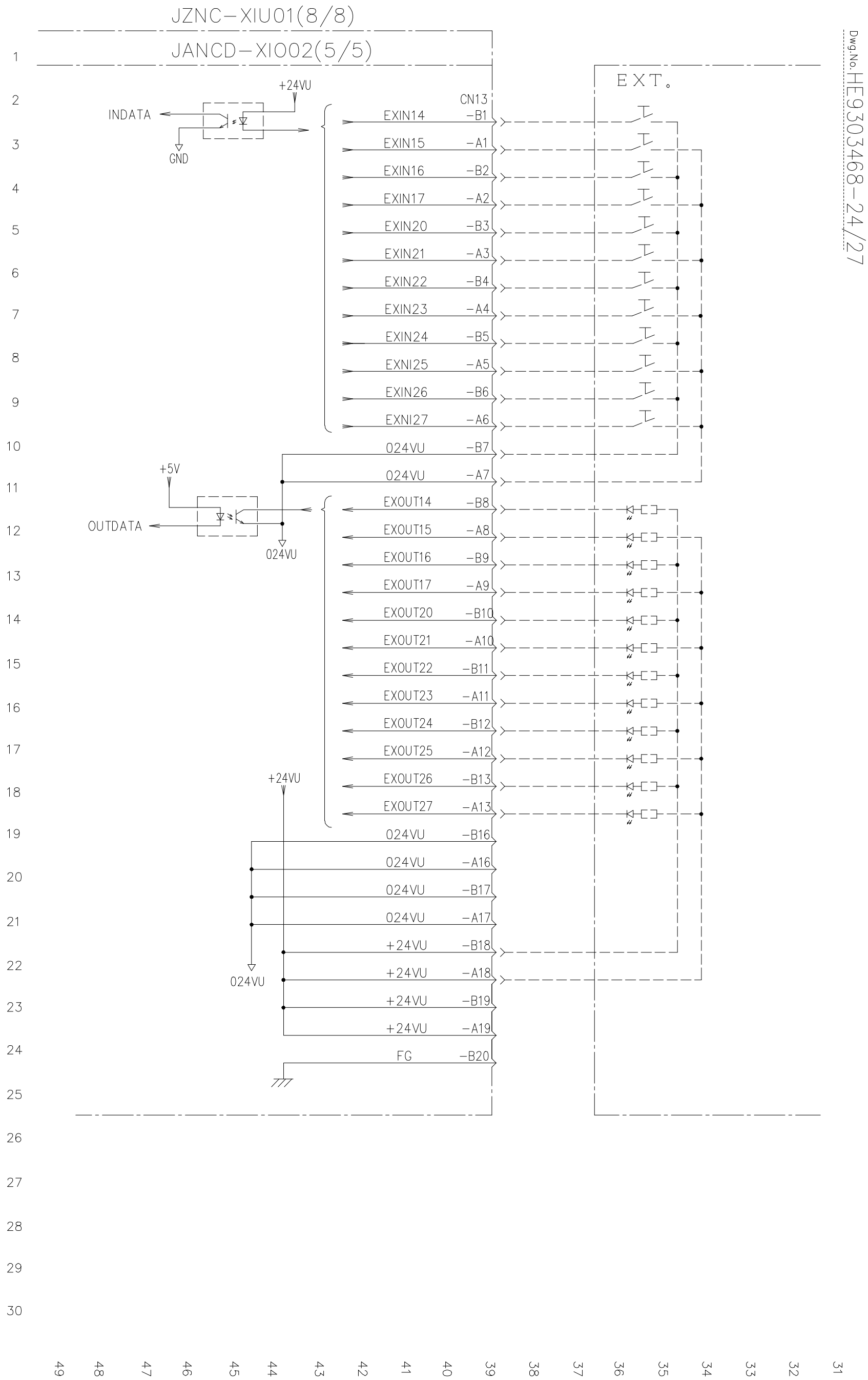

Dwg.No. HE9303468-24/27

Revisions:

YASKAWA

Draw.
Check.
Appr.

YASNAC XRC ELEMENTARY DIAGRAM

JZNC-XIU01(8/8);JANCD-XIO02(5/5)

HE9303468 24/27

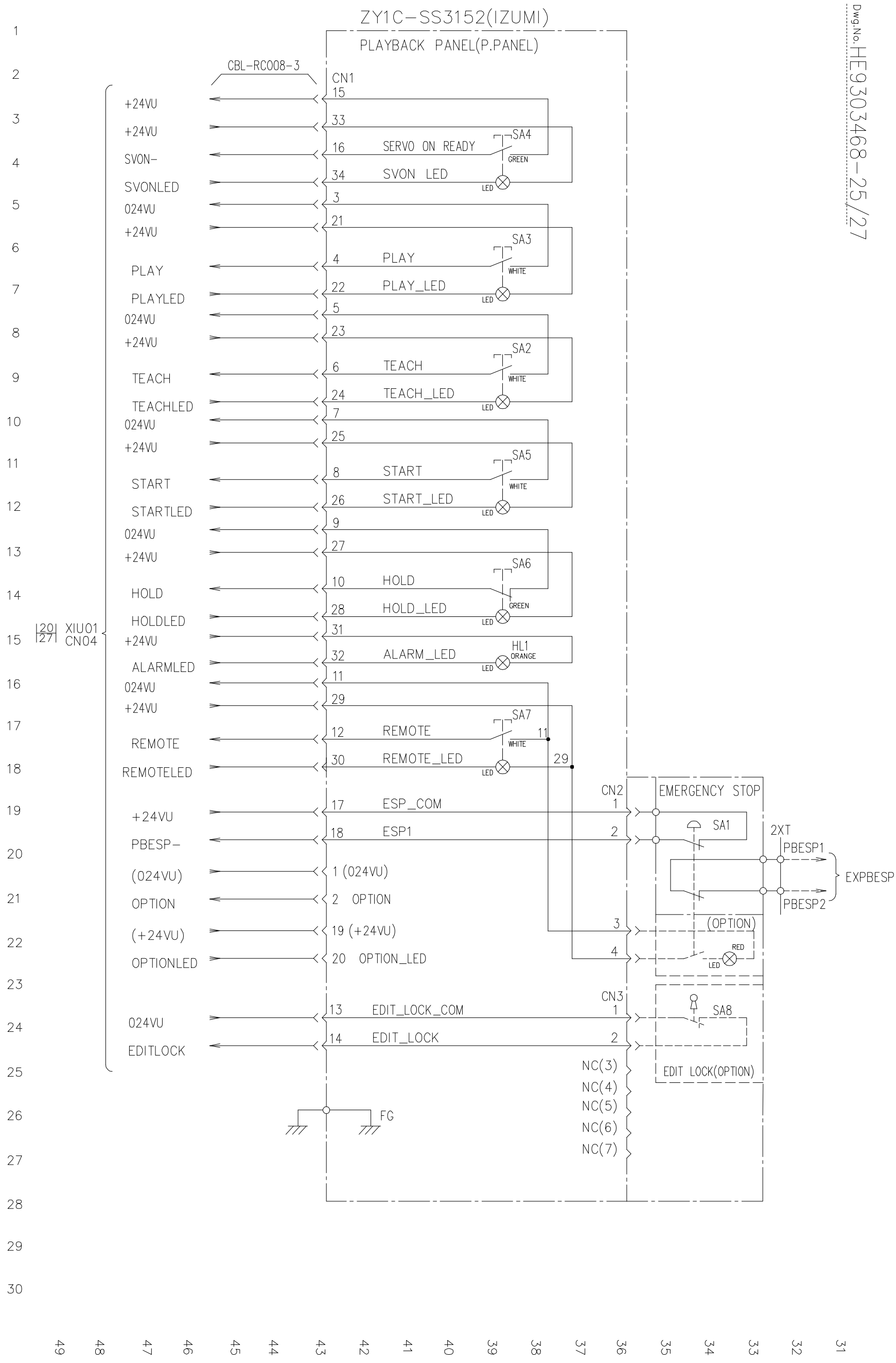

Revisions:

YASKAWA

Draw.
Check.
Appr.

YASNAC XRC ELEMENTARY DIAGRAM
PLAYBACK PANEL(ZY1C-SS3152)

HE9303468 25/27

Dwg.No. HE9303468-25/27

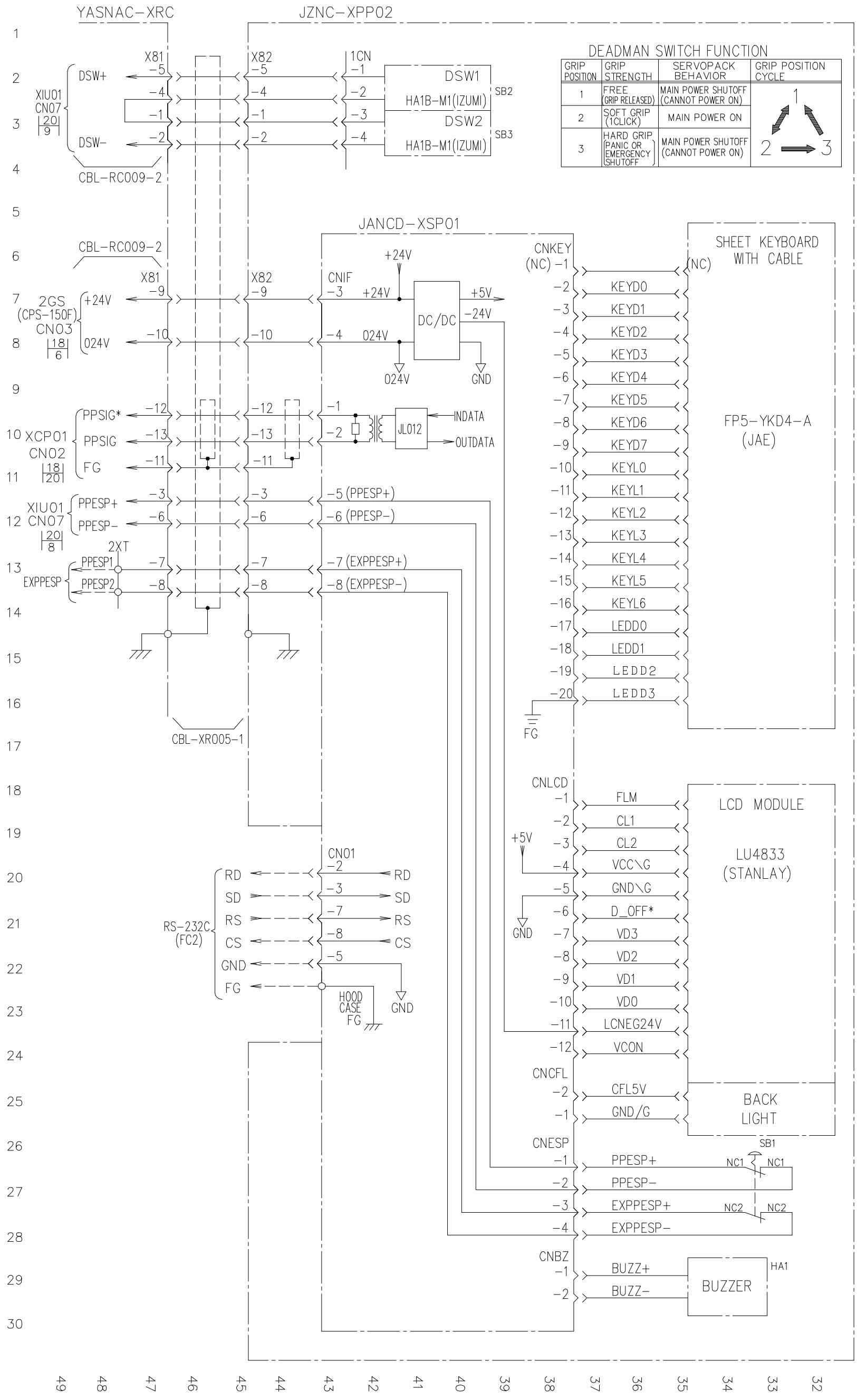

Revisions:

YASKAWA

Draw.
Check.
Appr.

YASNAC XRC ELEMENTARY DIAGRAM
PROGRAMMING PENDANT : JZNC-XPP02

HE9303468 26/27

Dwg.No. HE9303468-26/27

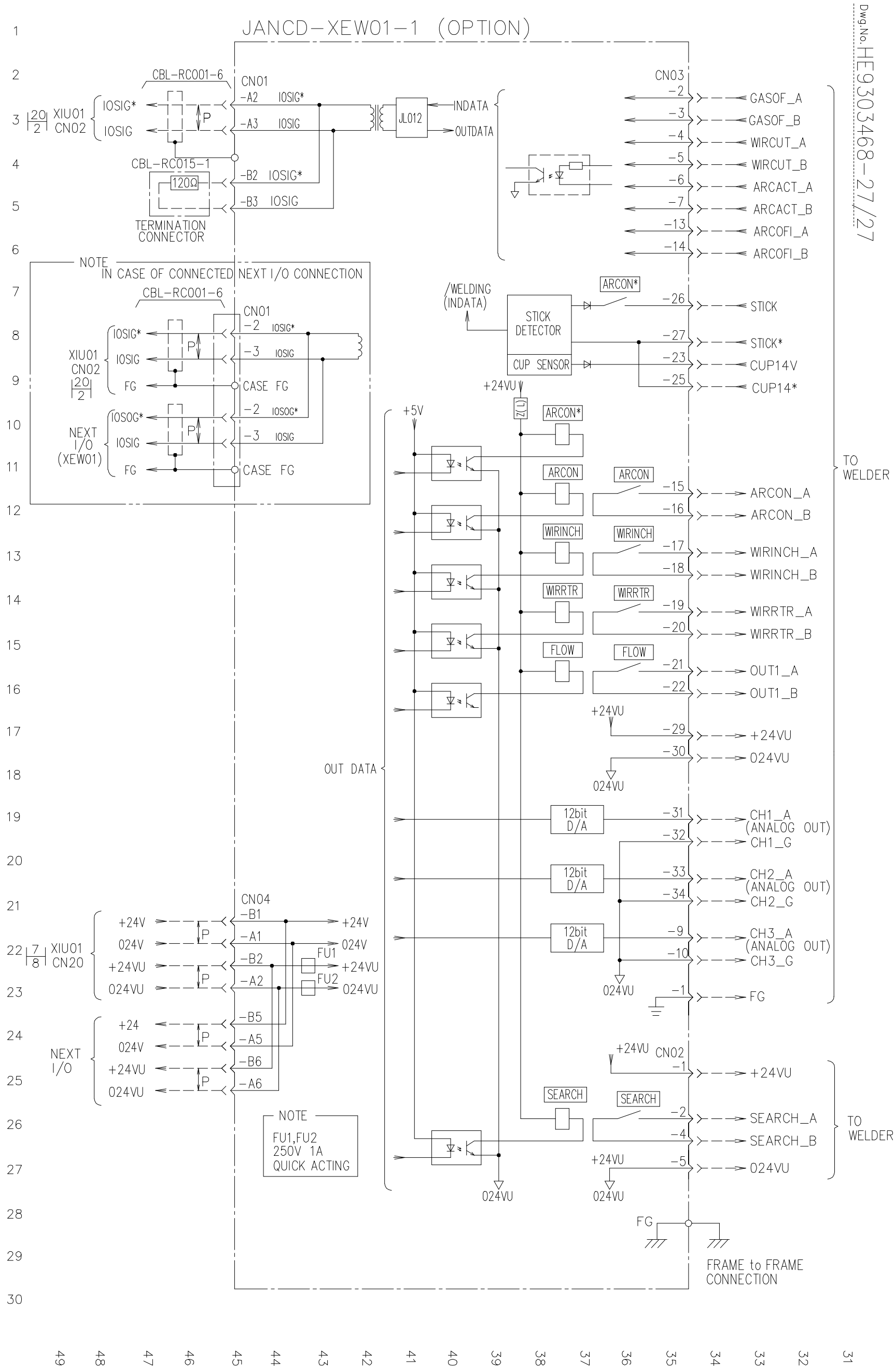

Revisions:

YASKAWA

Draw.
Check.
Appr.

YASNAC XRC ELEMENTARY DIAGRAM

JANCD-XEW01-1 (OPTION)

HE9303468 27/27

Dwg.No. HE9303468-27/27