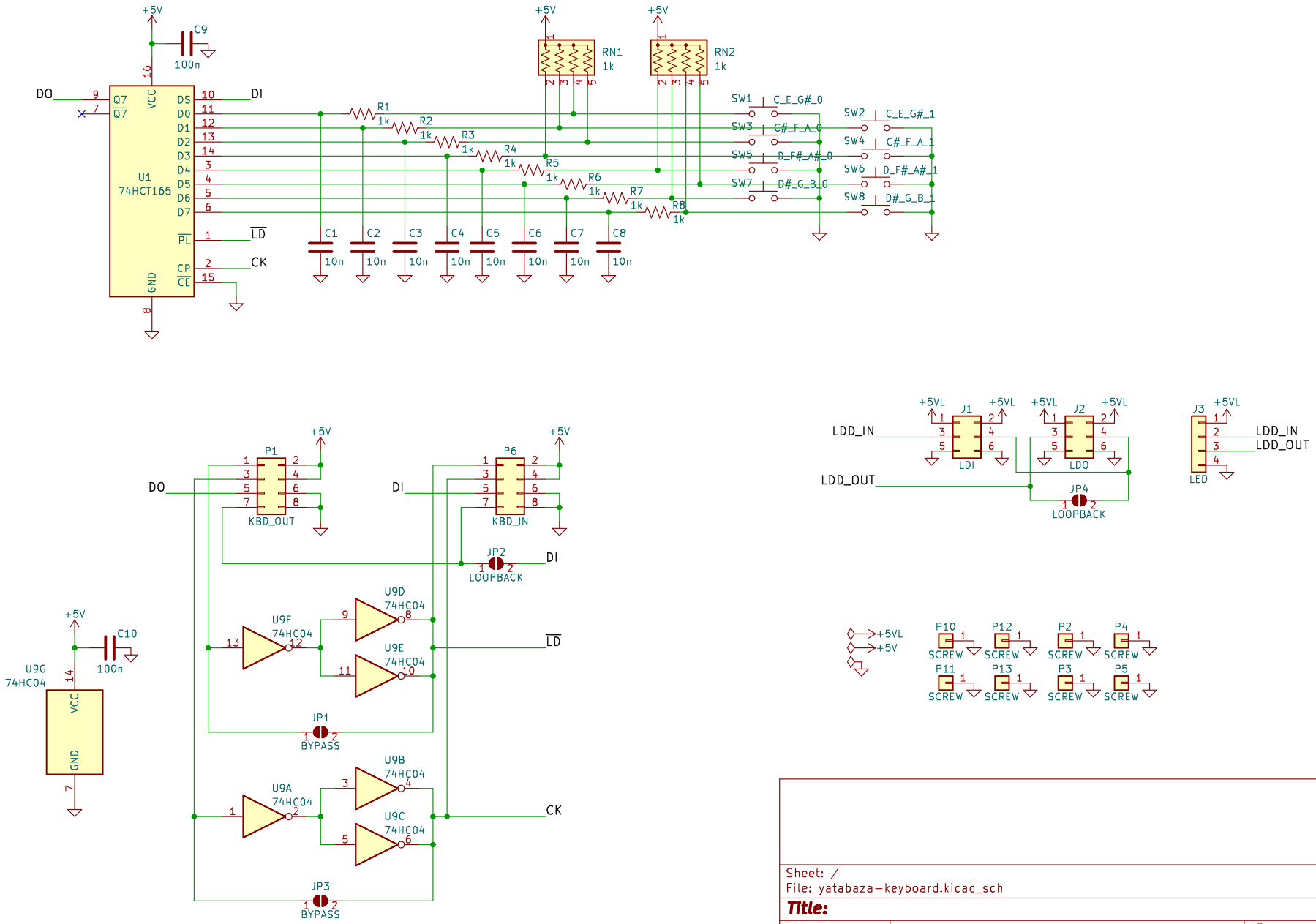

Sheet: /
File: yatabaza-keyboard.kicad_sch

Title:

Size: A4	Date:	Rev:
KiCad E.D.A. kicad 6.0.4+dfsg-1+b1		Id: 1/1