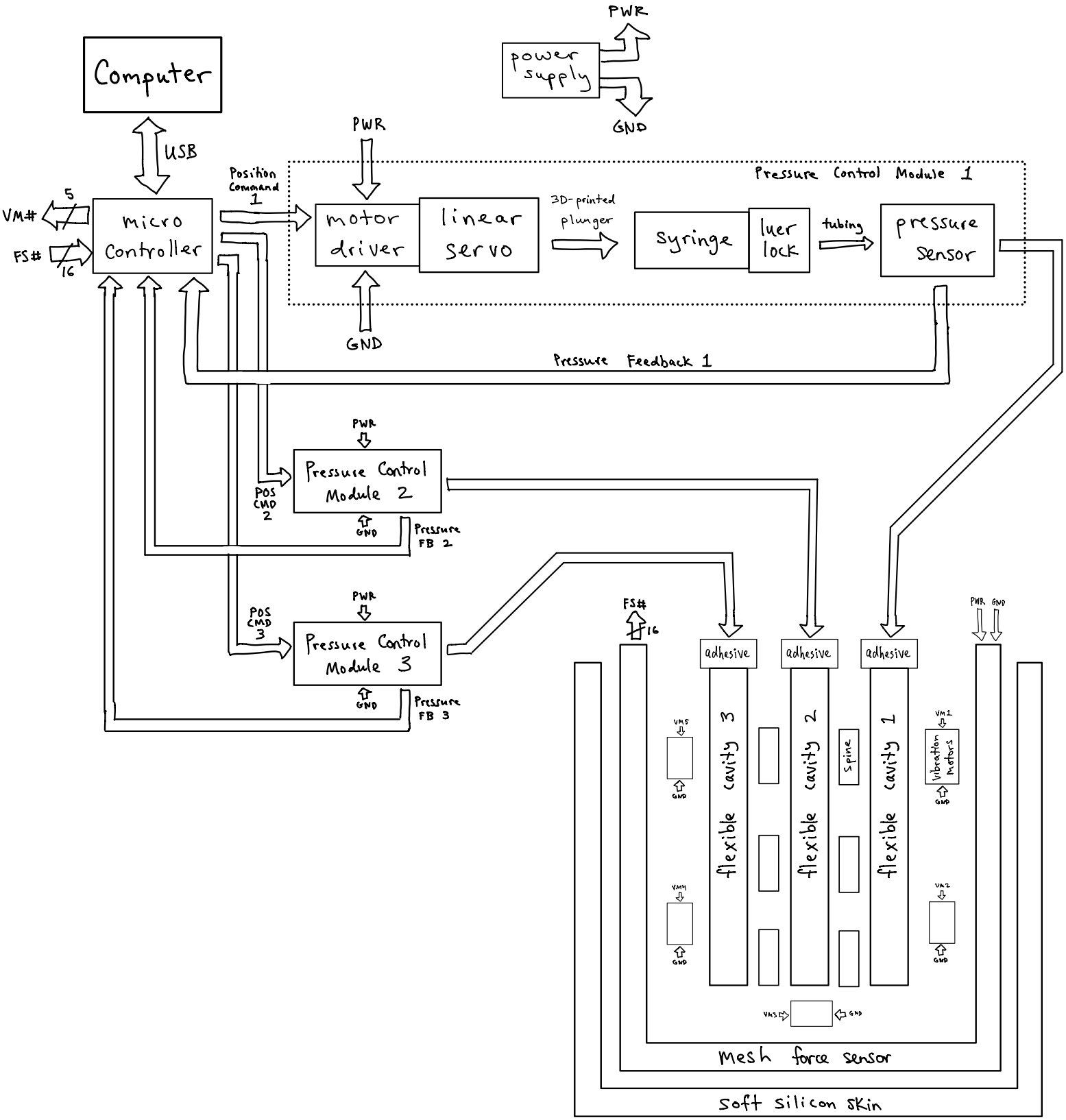
Computer
USB
micro Controller
VM#
5
FS#
16
Position Command 1
PWR
motor driver
linear servo
GND
3D-printed plunger
Syringe
luer lock
tubing
pressure sensor
Pressure Control Module 1
power supply
PWR
GND
Pressure Feedback 1
PWR
Pressure Control Module 2
POS CMD 2
GND
Pressure FB 2
PWR
Pressure Control Module 3
POS CMD 3
GND
Pressure FB 3
FS#
16
adhesive
adhesive
adhesive
PWR
GND
VM5
GND
flexible cavity 3
flexible cavity 2
Spine
flexible cavity 1
VM1
Vibration motors
GND
VM4
GND
VM2
GND
VM3
GND
mesh force sensor
soft silicon skin

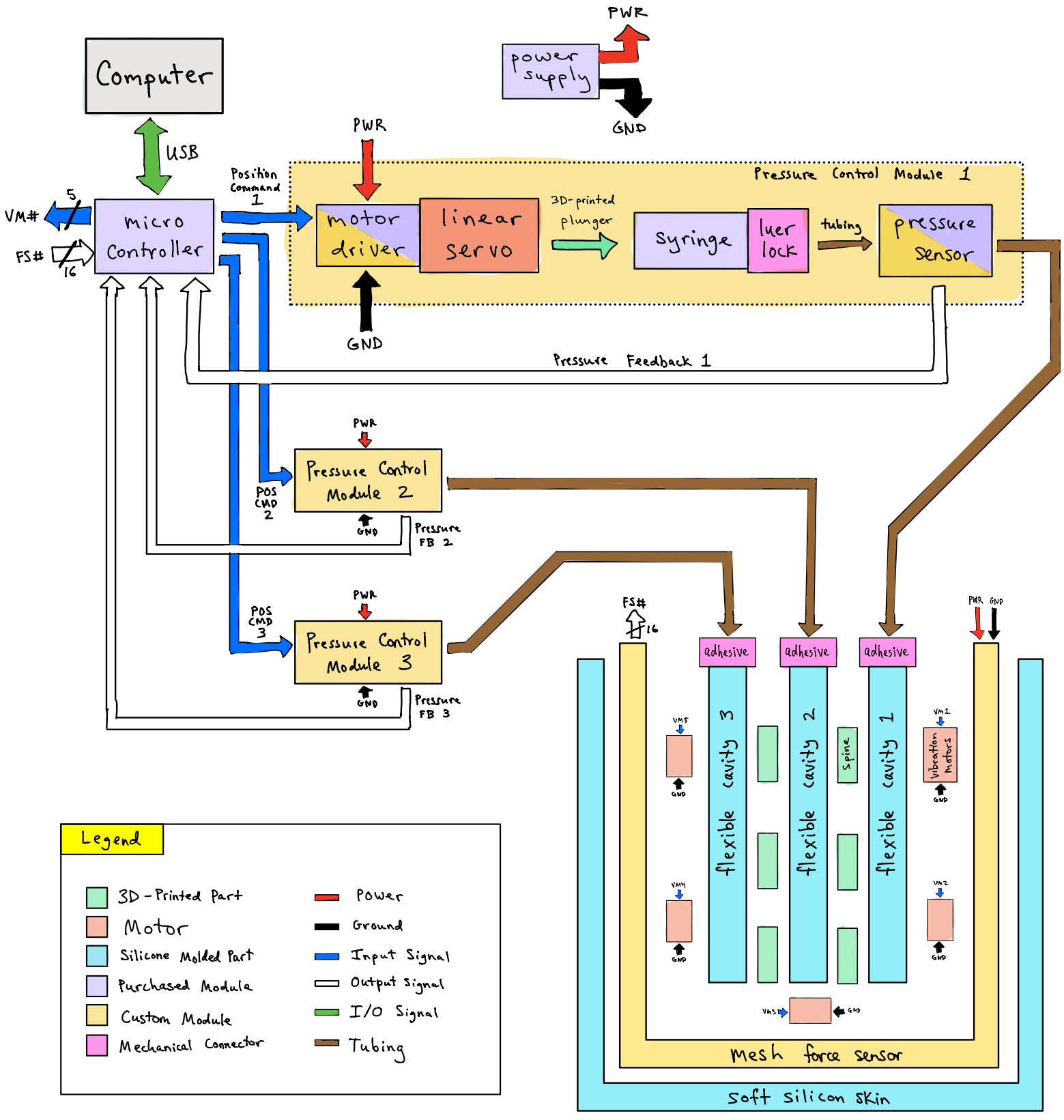
Computer
USB
micro Controller
VM#
5
FS#
16
Position Command 1
PWR
motor driver
linear servo
GND
3D-printed plunger
Syringe
luer lock
tubing
pressure sensor
Pressure Control Module 1
power supply
PWR
GND
Pressure Feedback 1
PWR
Pressure Control Module 2
POS CMD 2
GND
Pressure FB 2
PWR
Pressure Control Module 3
POS CMD 3
GND
Pressure FB 3
FS#
16
adhesive
adhesive
adhesive
PWR GND
VM5
GND
flexible cavity 3
flexible cavity 2
Spine
flexible cavity 1
VM1
Vibration motors
GND
VM4
GND
VM2
GND
VM3
GND
mesh force sensor
Soft silicon skin
Legend
3D-Printed Part
Motor
Silicone Molded Part
Purchased Module
Custom Module
Mechanical Connector
Power
Ground
Input Signal
Output Signal
I/O Signal
Tubing

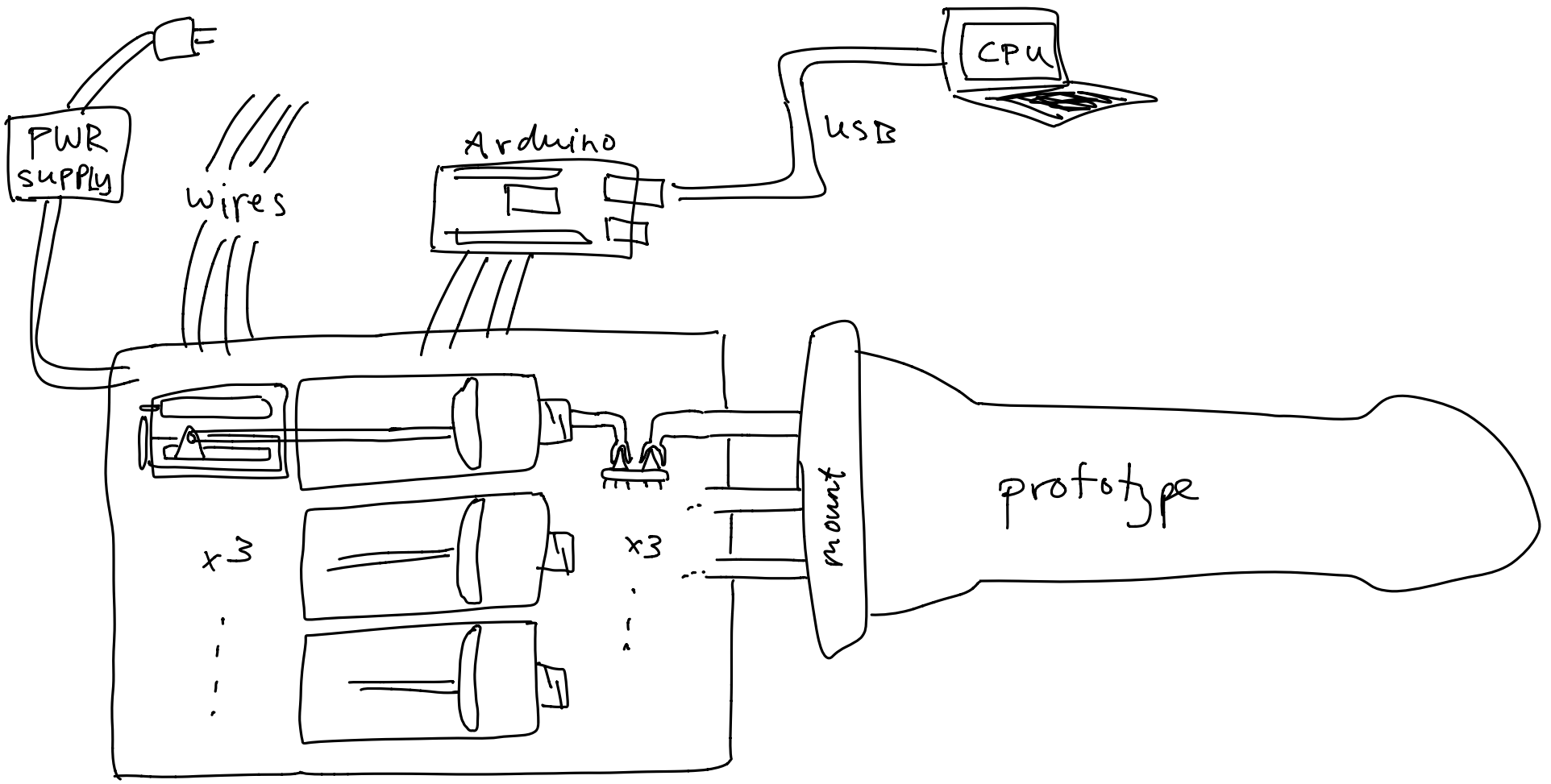
PWR supply
wires
Arduino
USB
CPU
x3
x3
mount
prototype

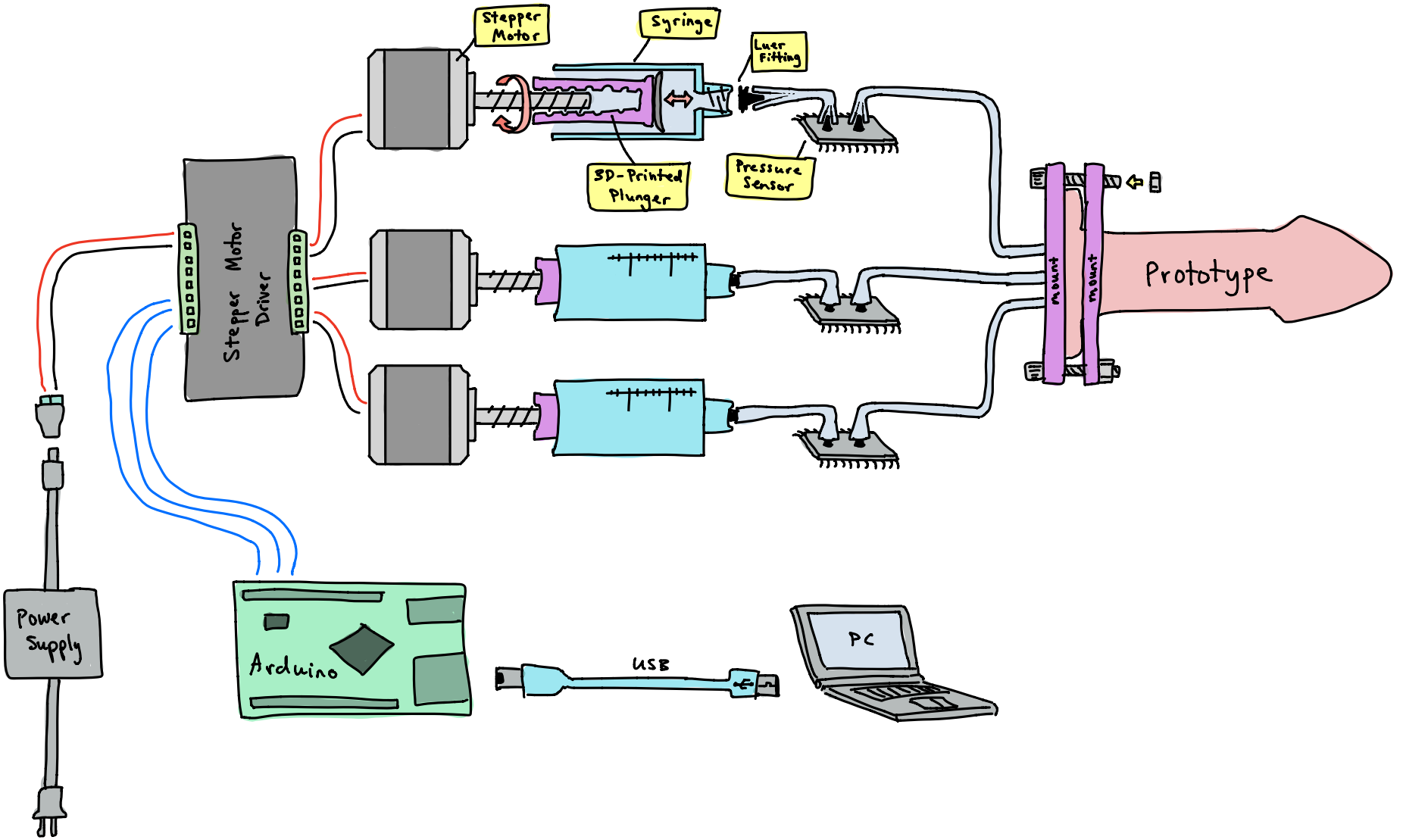
Stepper Motor
Syringe
Luer Fitting
3D-Printed Plunger
Pressure Sensor
Stepper Motor Driver
Mount
Mount
Prototype
Power Supply
Arduino
USB
PC

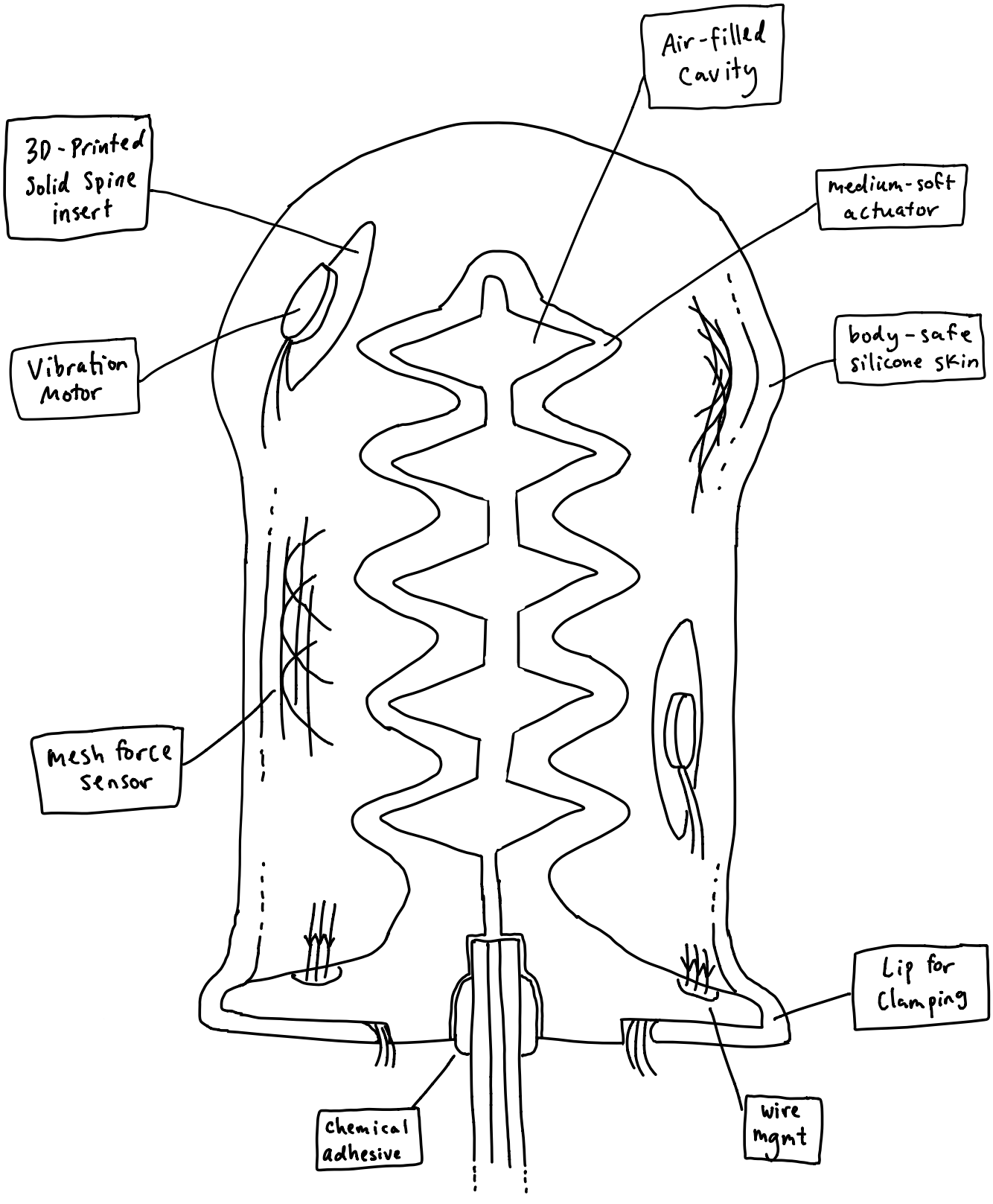
Air-filled Cavity
3D-Printed Solid Spine insert
medium-soft actuator
Vibration Motor
body-safe silicone skin
mesh force sensor
Lip for Clamping
chemical adhesive
wire mgmt

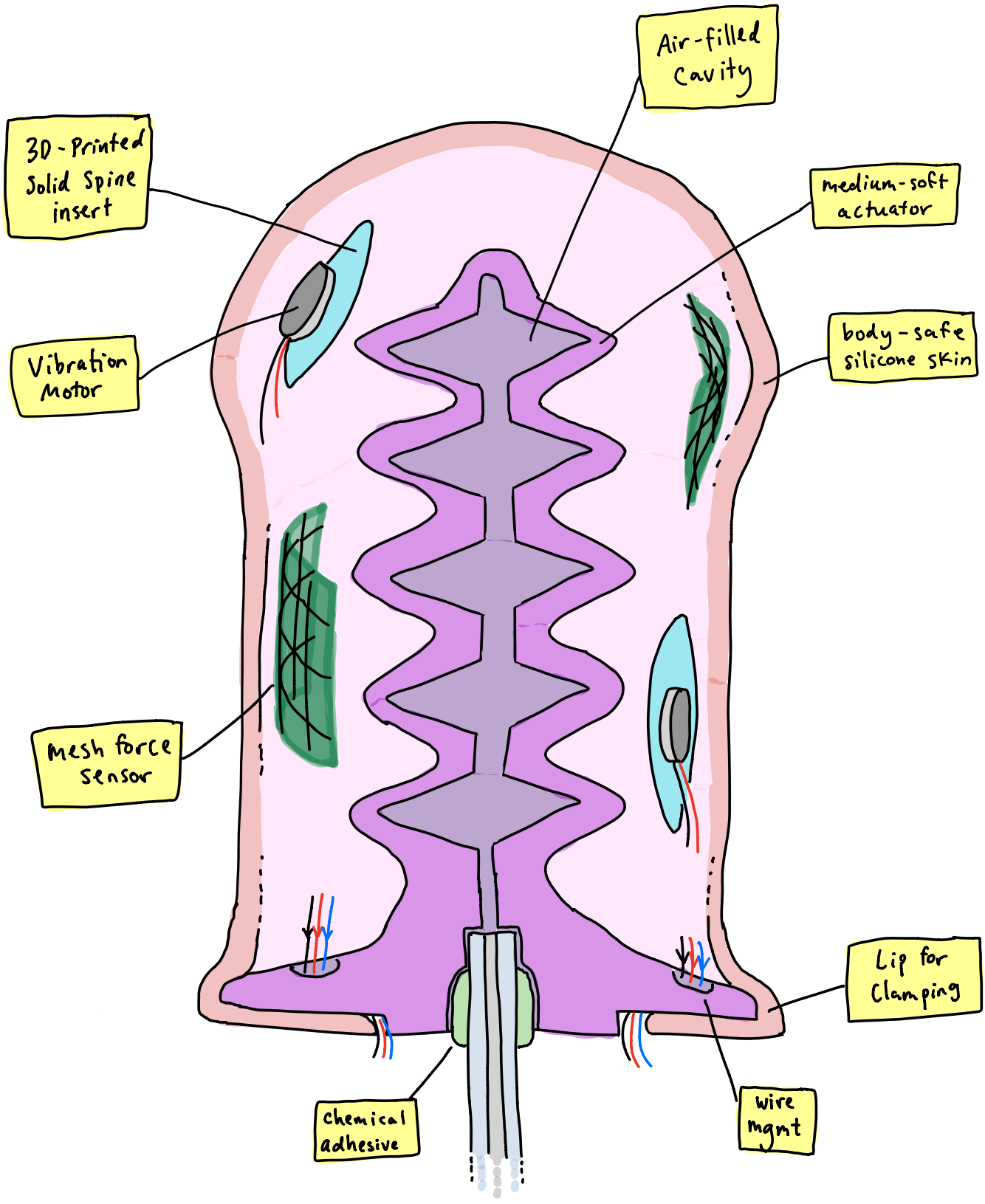
Air-filled Cavity
3D-Printed Solid Spine insert
medium-soft actuator
Vibration Motor
body-safe silicone skin
Mesh force sensor
Lip for Clamping
chemical adhesive
wire mgmt