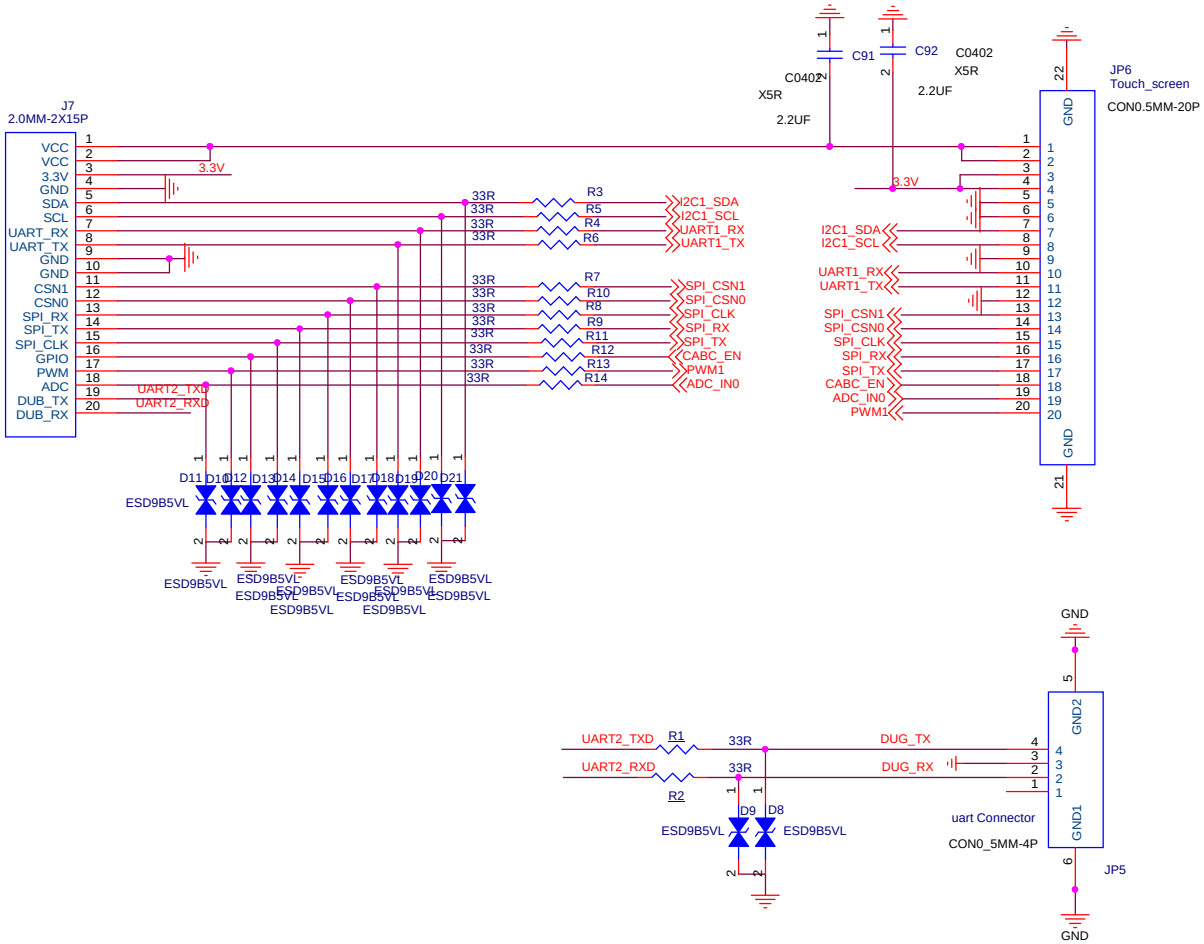

Title	<Title>		
Size B	Document Number <Doc>	<RevCode>	Rev
Date: Saturday, March 23, 2019	Sheet 1 of 1		