Hard Tri-fold Low-profile Installation Manual

1 Accessories Inventory

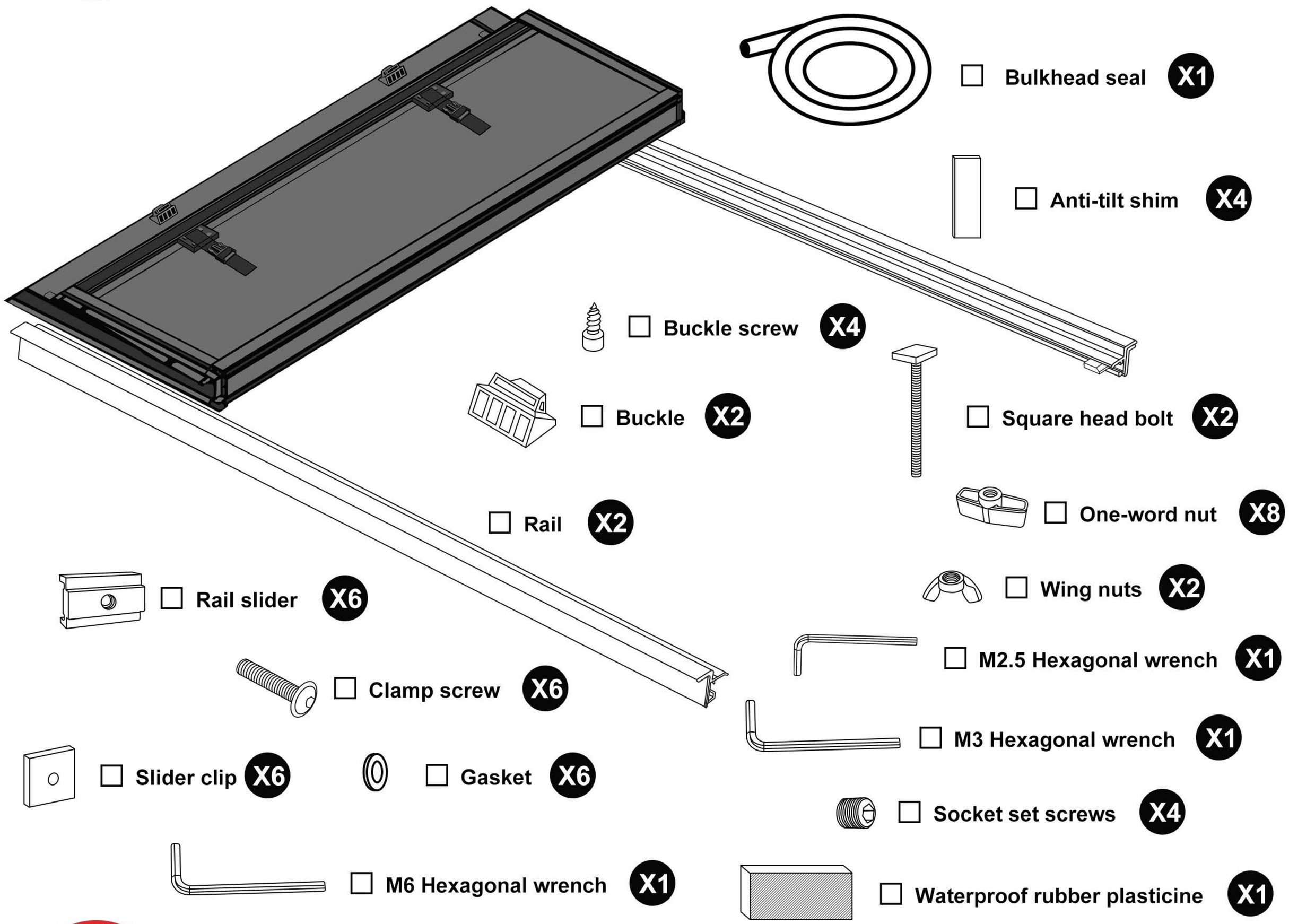

2 Product Advantages

Our Tonneau Cover Is Made of Several Durable Materials,
Such as FRP Panels Aircraft-grade alloy aluminum and High Performance Structural Sealant Etc.

We Offer Matched Tonneau Cover For Dozens Of Car Models, Fit For The Truck Bed Perfectly.

3 Installation

CAUTION

- CLEAN THE BULKHEAD WITH SOAP AND WATER TO REMOVE IMPURITIES AND GREASE, ALLOWING THE MOISTURE TO EVAPORATE TO ENSURE A DRY SURFACE.

Peel off the backing and stick|the seal from one edge to the other edge. Use scissors or a utility knife to remove any excess. Apply even pressure along the entire seal to ensure good adhesion. If the truck has a Plastic bed liner the seal is not necessary

Pay attention to the distinction between left and right

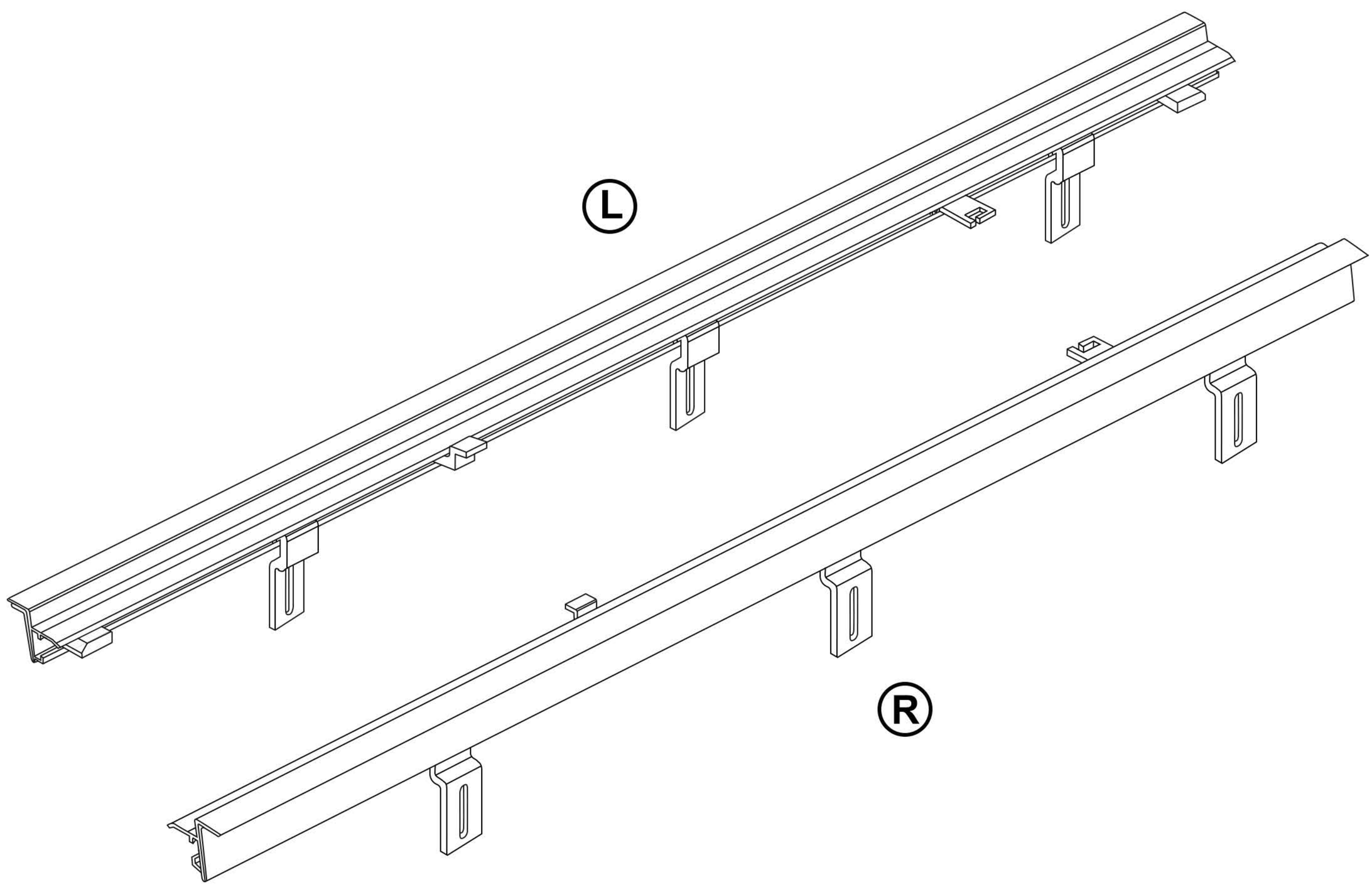

Rail sliders into the factory accessory rails, three on each side.Install only the center alignment clamp to secure guide rail positioning.This prevents slider path interference.

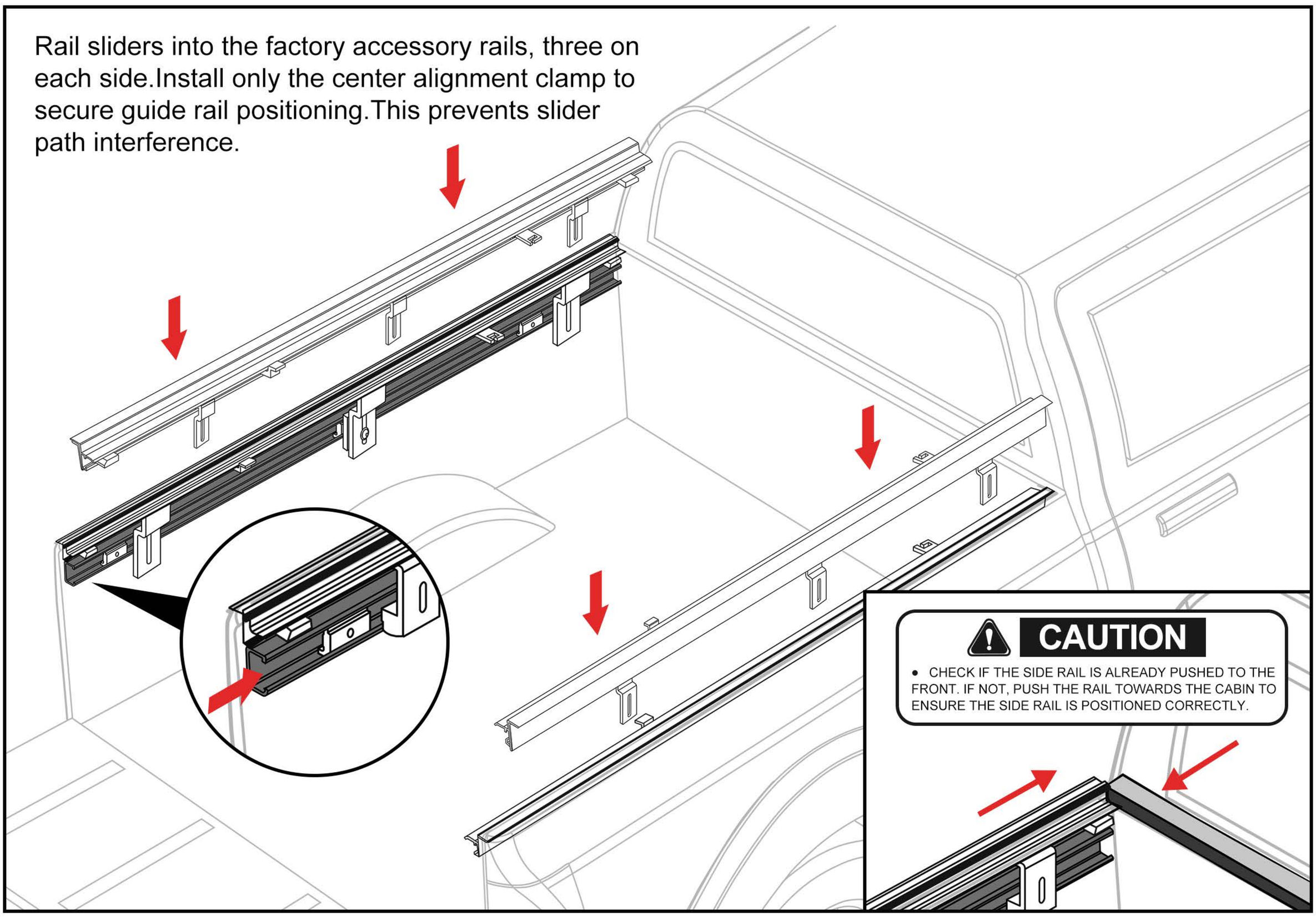

Rail slider in the middle of the factory accessory rails and align the corresponding slider on the moving rail.

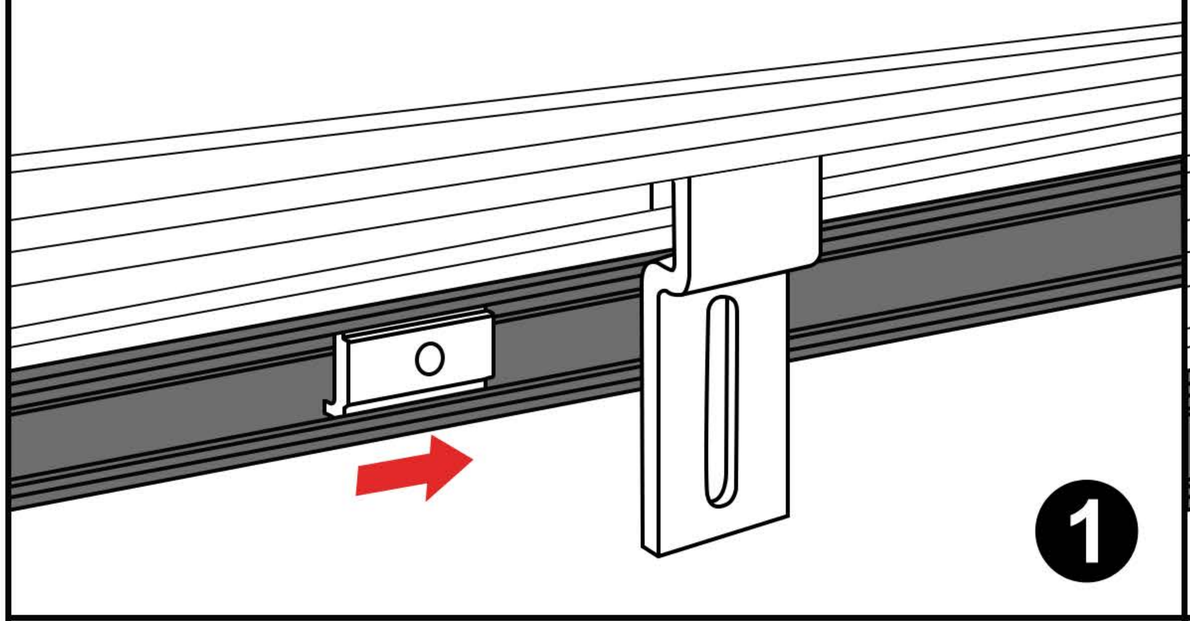

Slider clip inserted between two parts.

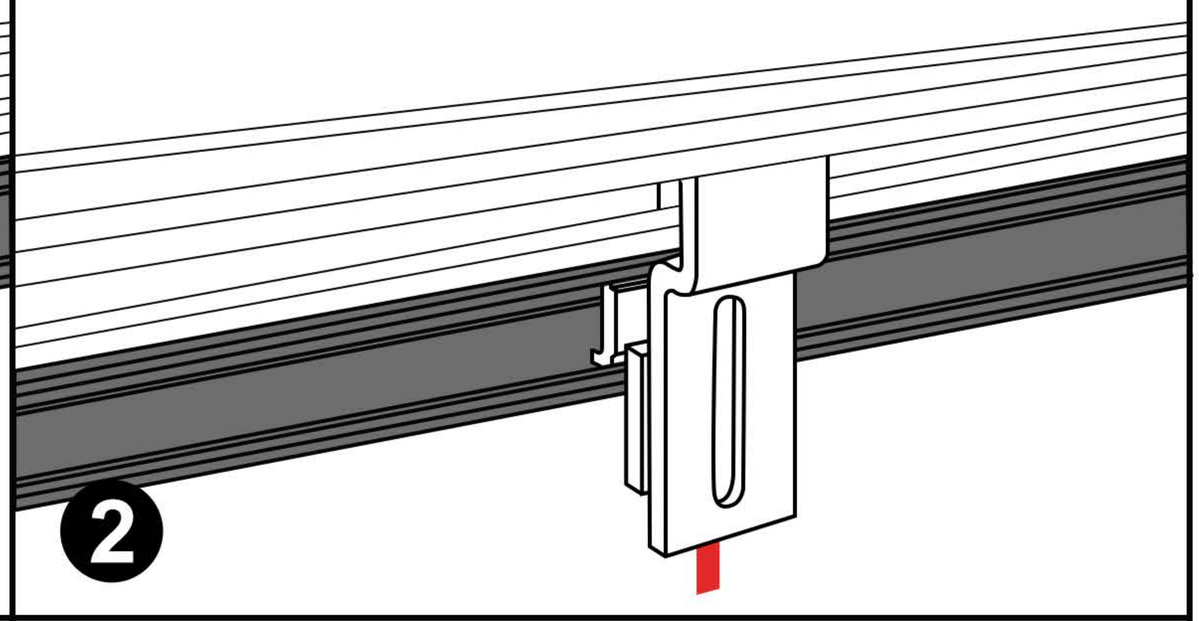

Pass the clamp screw through the gasket and connect the three parts through the middle threaded hole.

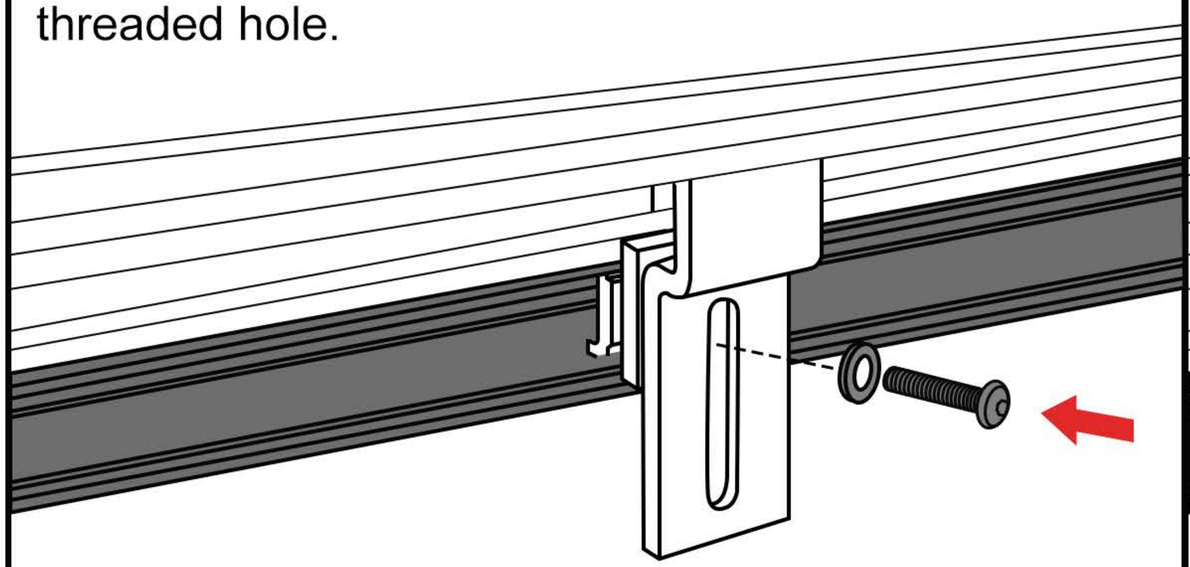

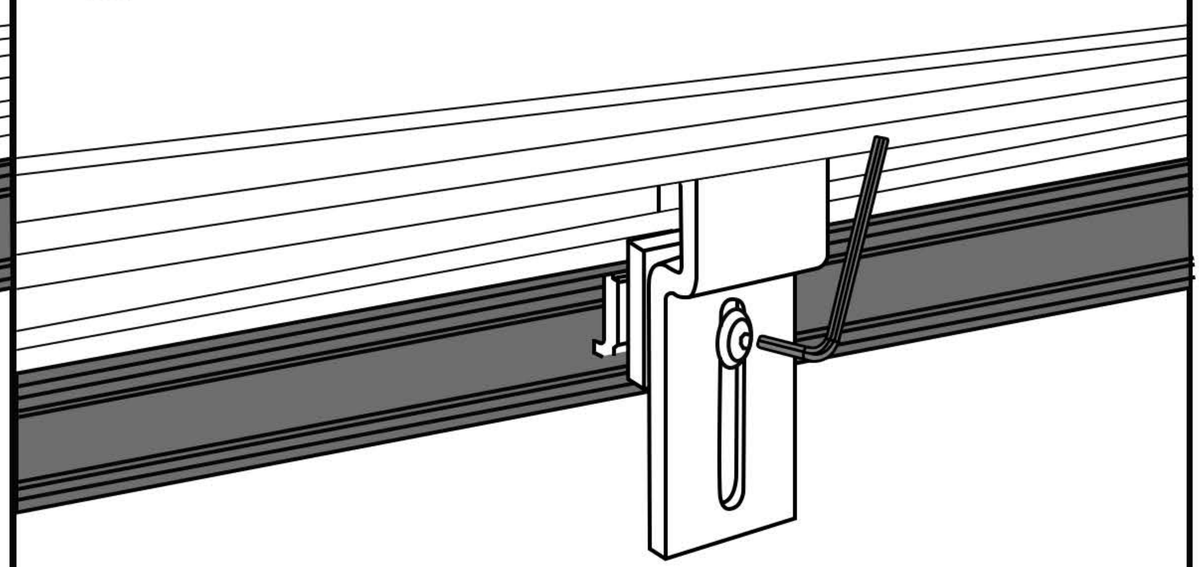

Complete installation after tightening.

Place the truck bed cover onto the rails. Slightly move the cover backwards to ensure locking tongues fit snugly against the fixed blocks. As shown in the diagram

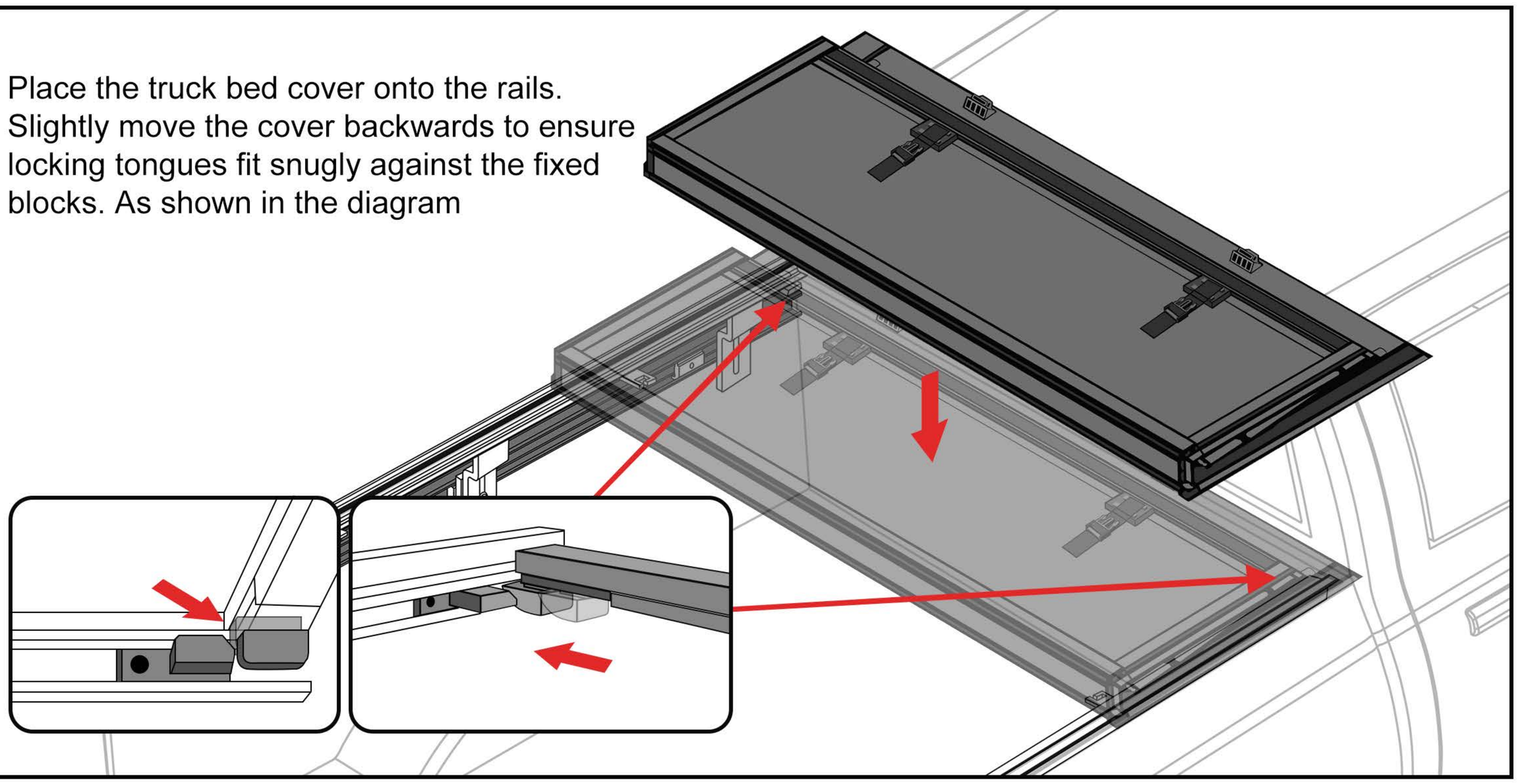

Position the buckle ends withthe open side facing the bed coverpanel.Use a Hexagon wrench install the two buckles into thepre-drilled holes on the front headerpanel with the provided screws. DO NOT usea screw gun,securely tighten byhand only.

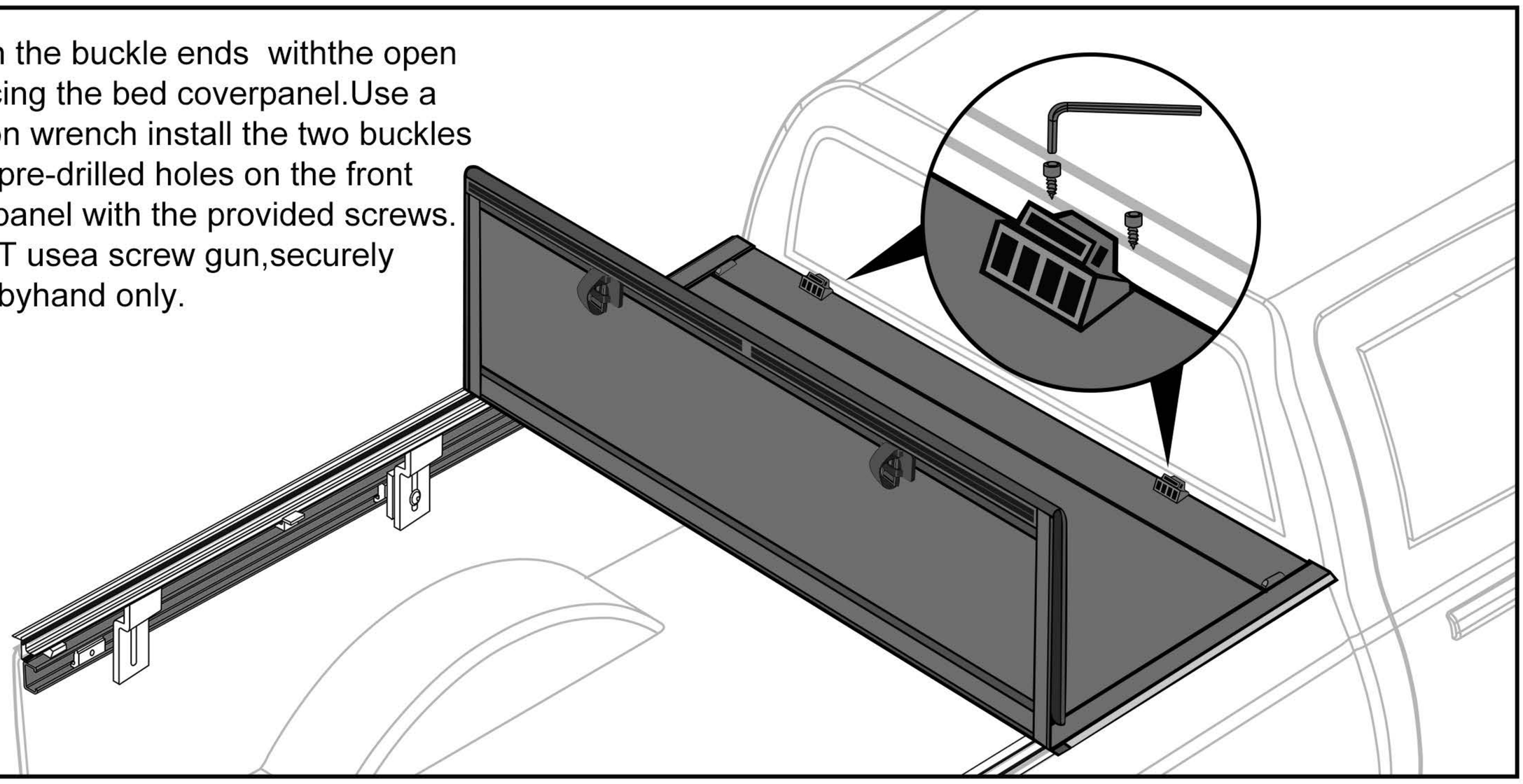

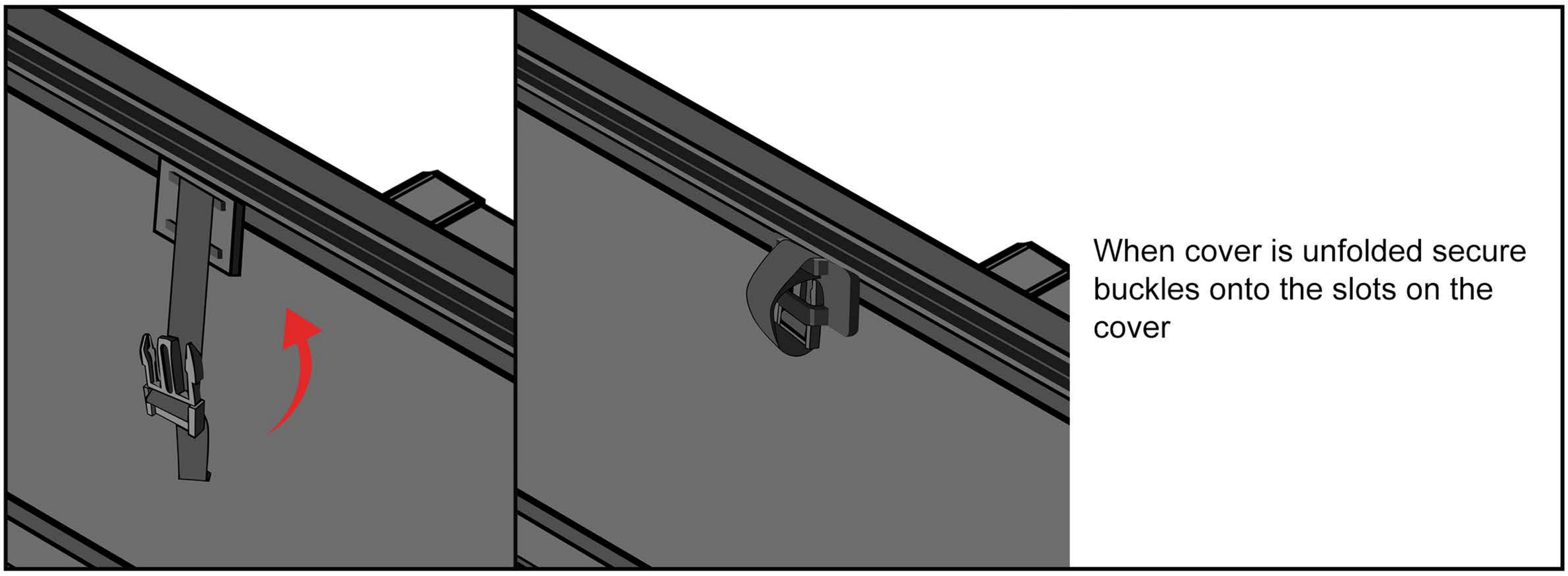

When cover is unfolded secure buckles onto the slots on the cover

Unfold the truck bed cover in sequence.

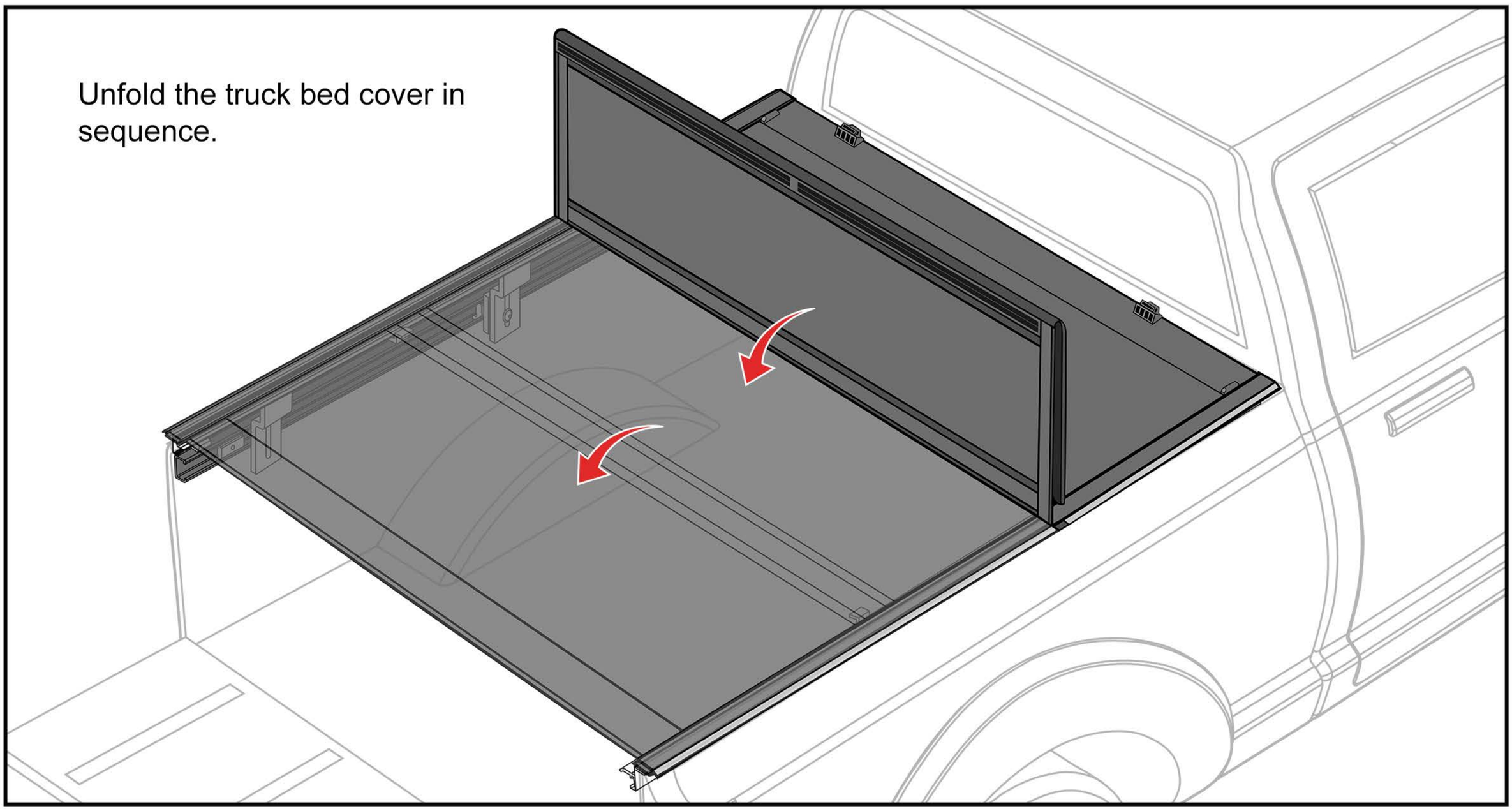

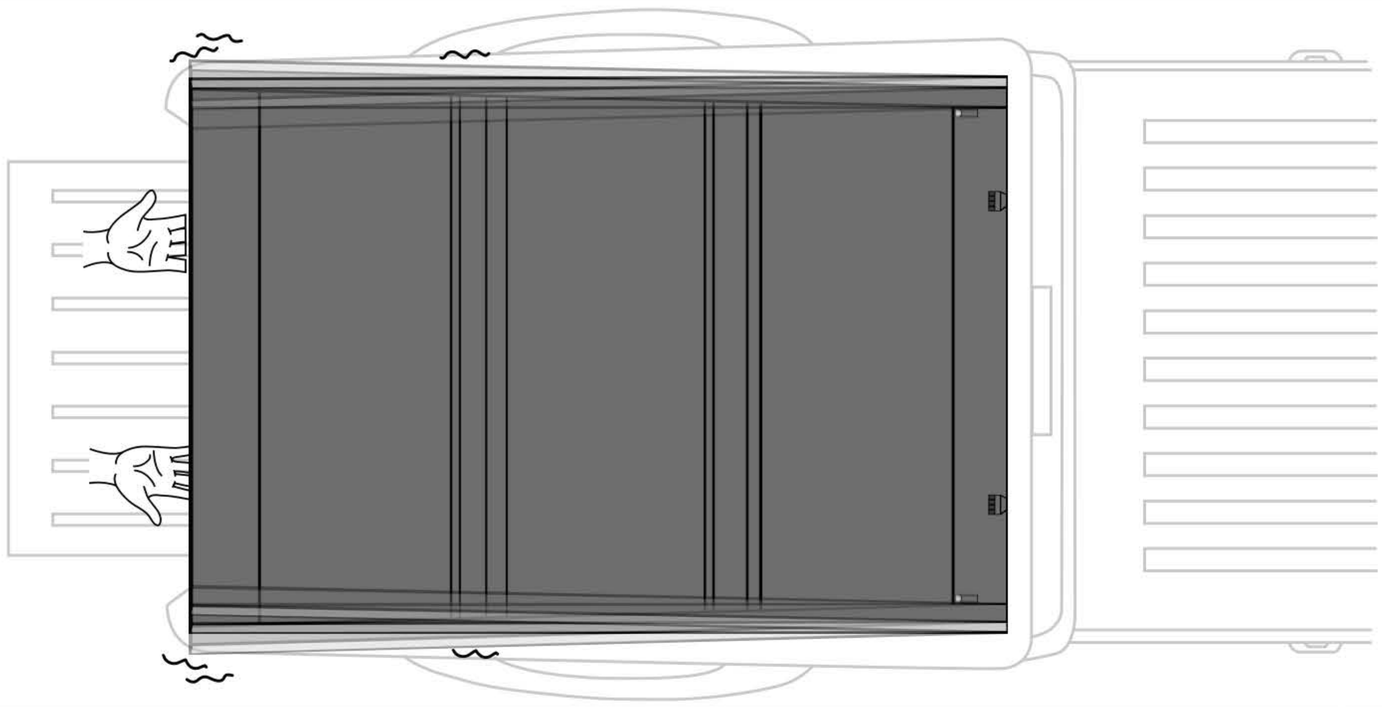

Adjust the bed cover to center it.

Ensure cover is aligned on both sides of the rails.Check the distance between the cover and side rails are even. Shown on red illustration

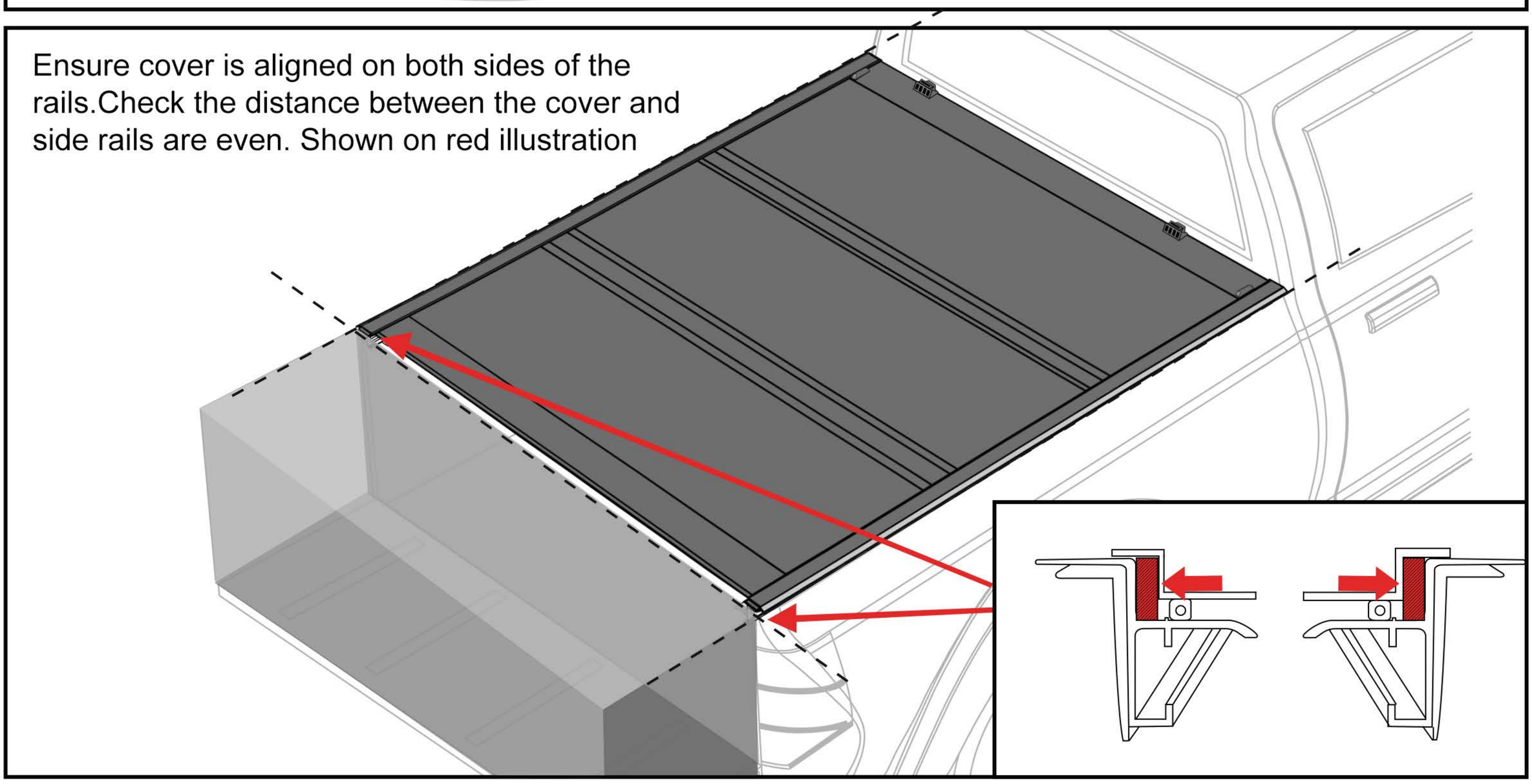

For some vehicle models, the guide rails may tilt downward. You can place the provided washer in the yellow position as shown in the diagram to realign the guide rails.

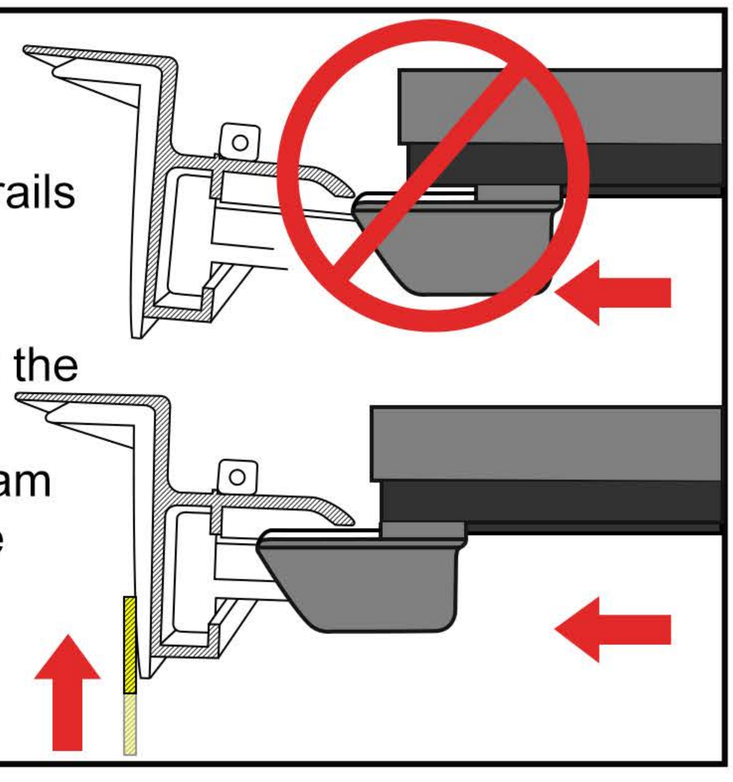

When the cover is fully closed inspect locking tongues properly engages

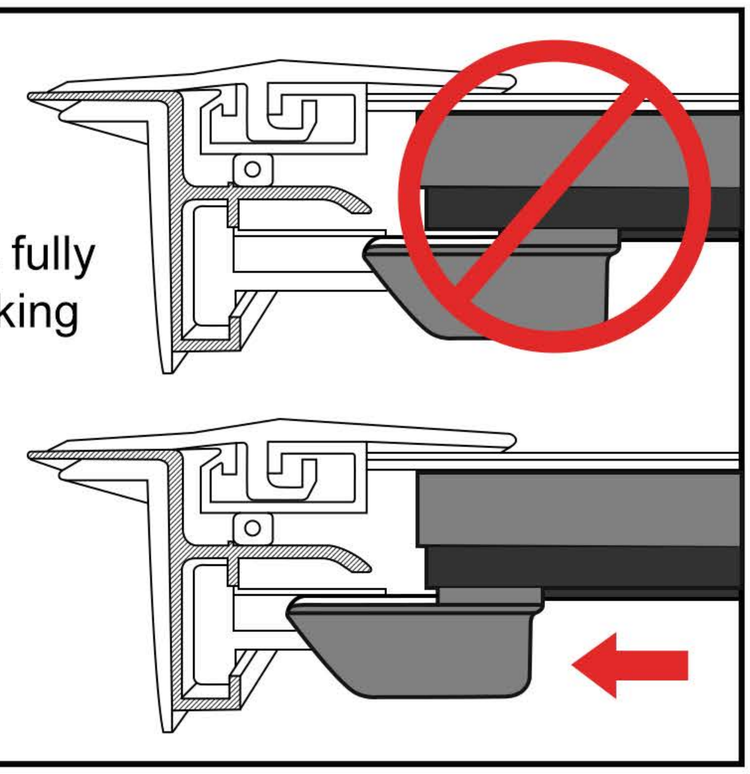

Pull the handle at the bottom to unlock the latch. Flip the cover open

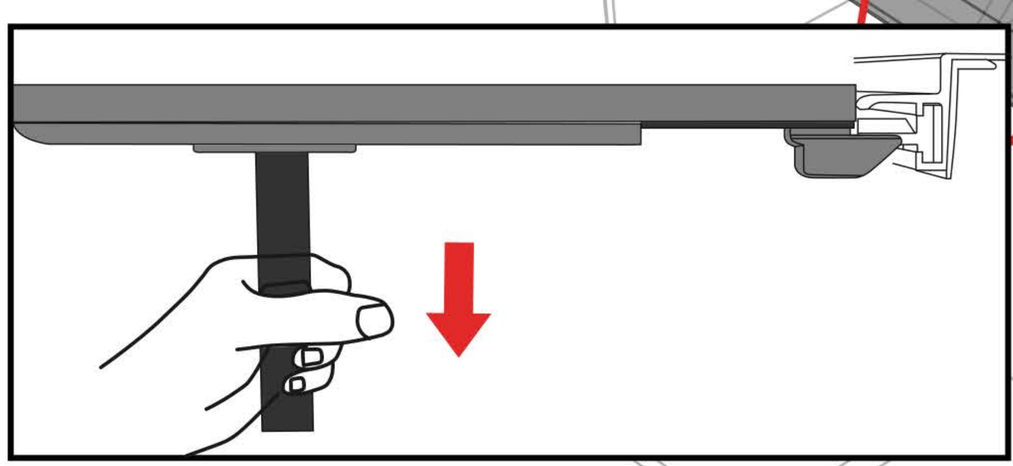

Flip the truck bed cover to the indicated position.

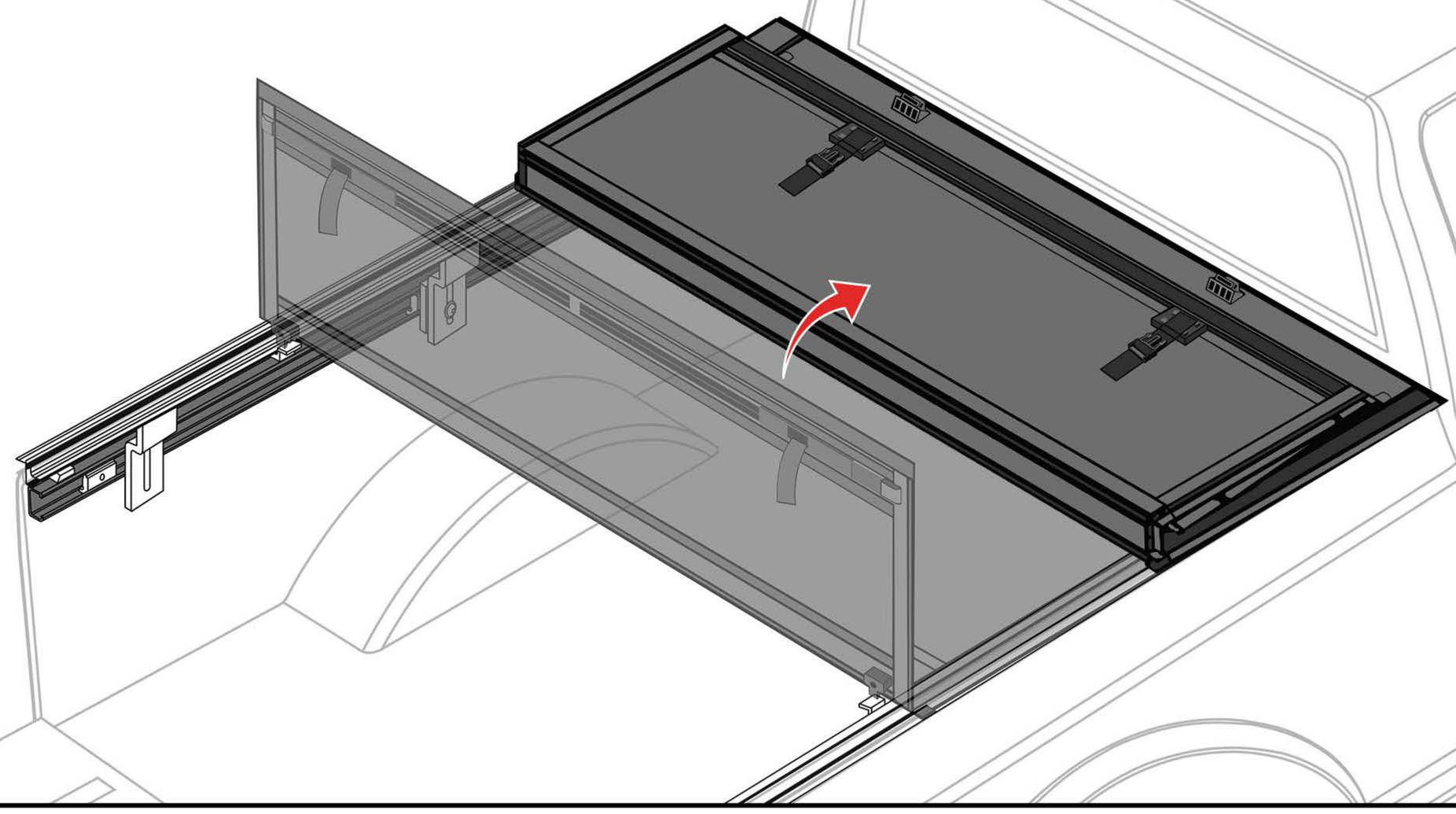

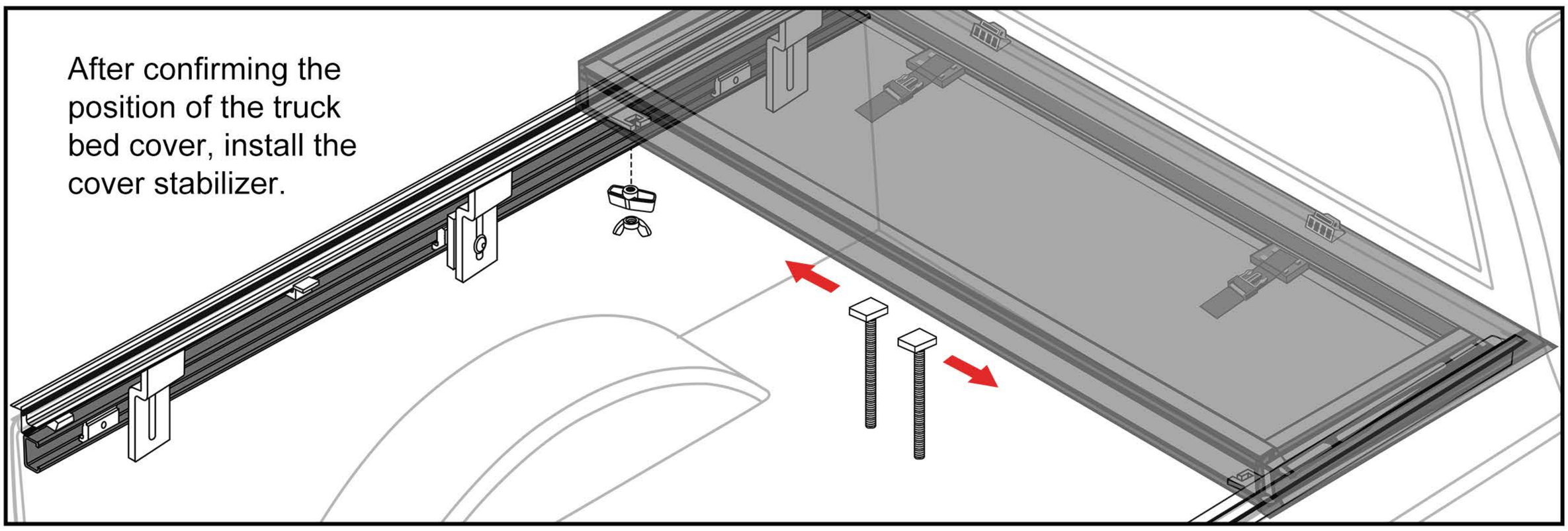

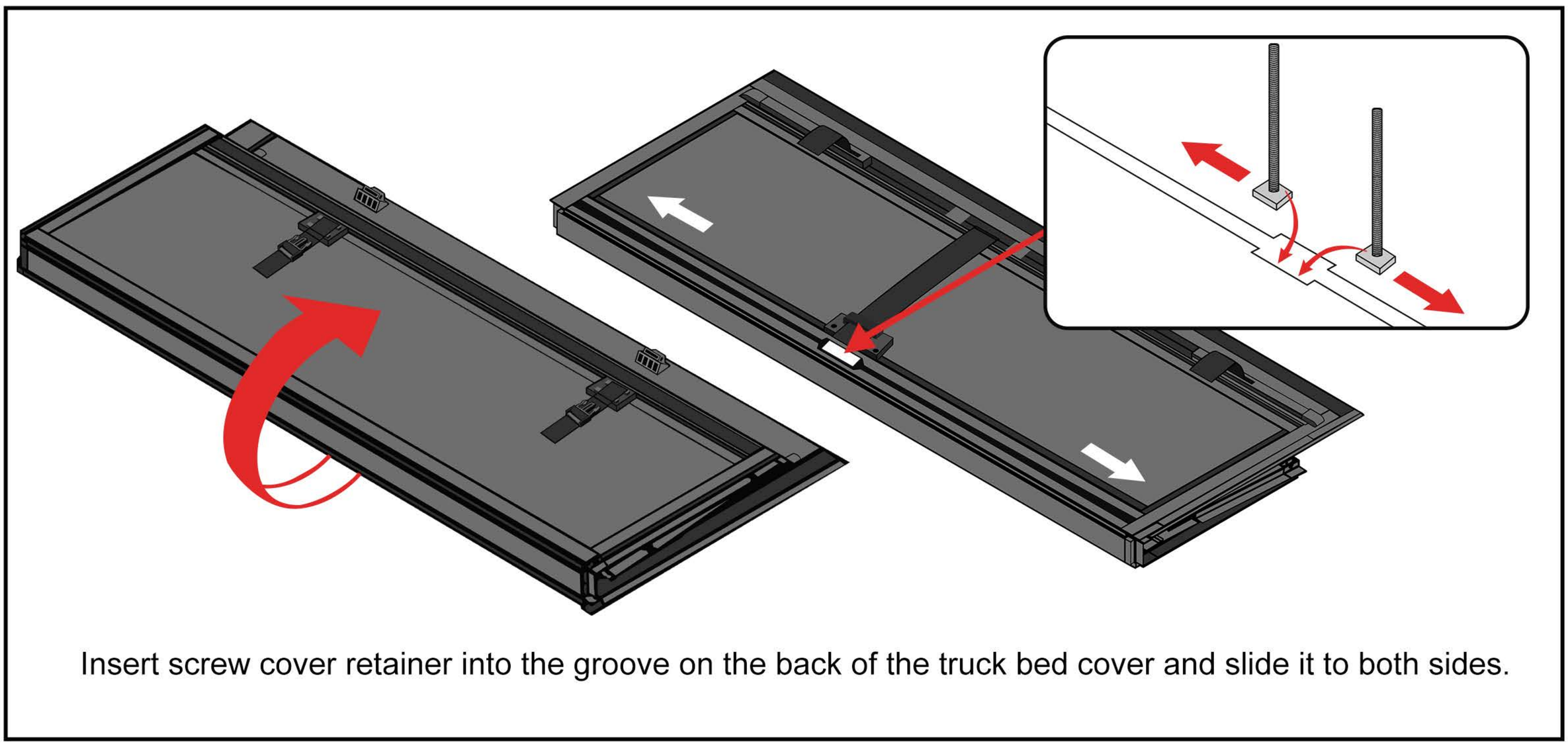

Insert screw cover retainer into the groove on the back of the truck bed cover and slide it to both sides.

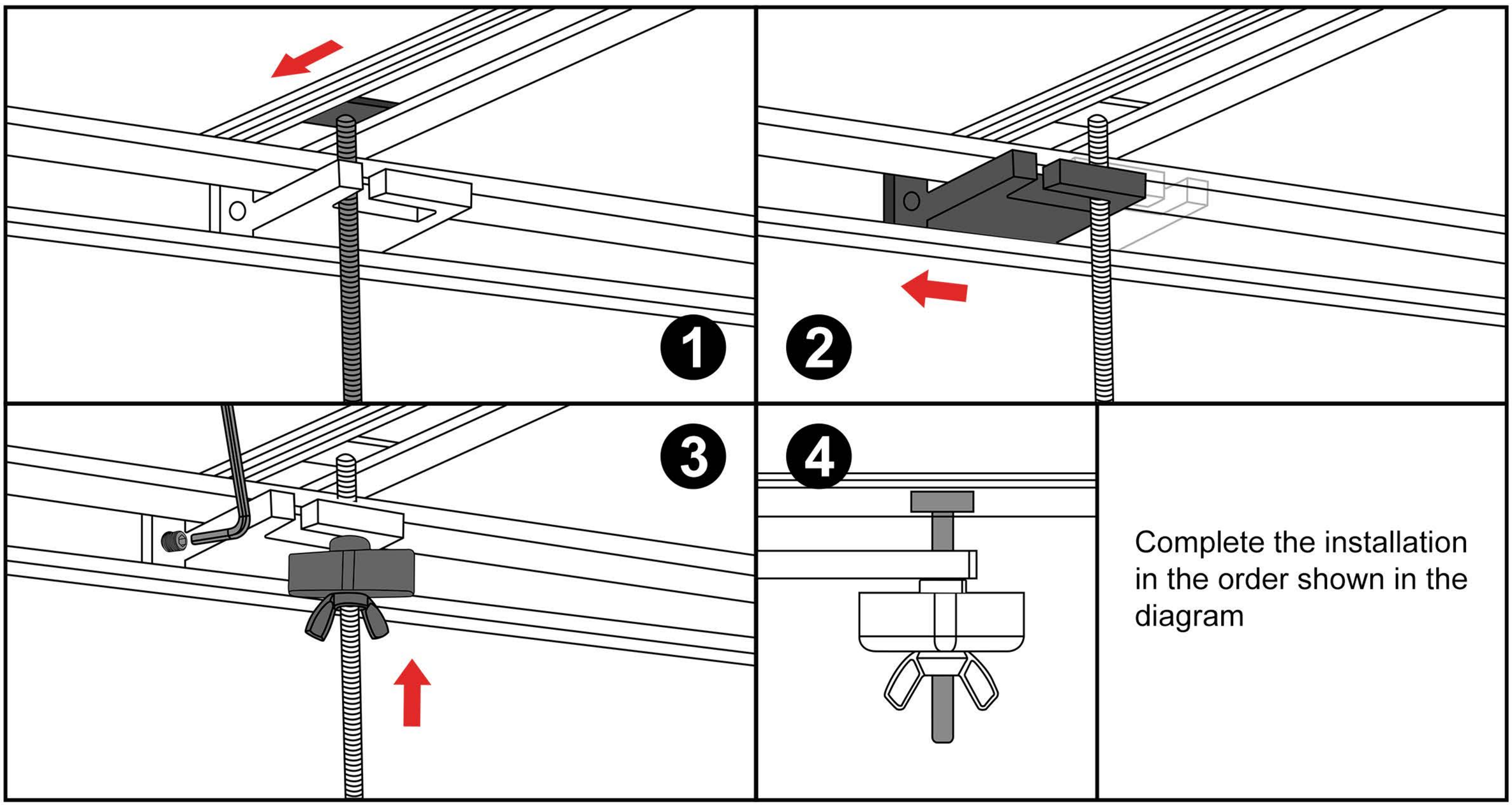

Complete the installation in the order shown in the diagram

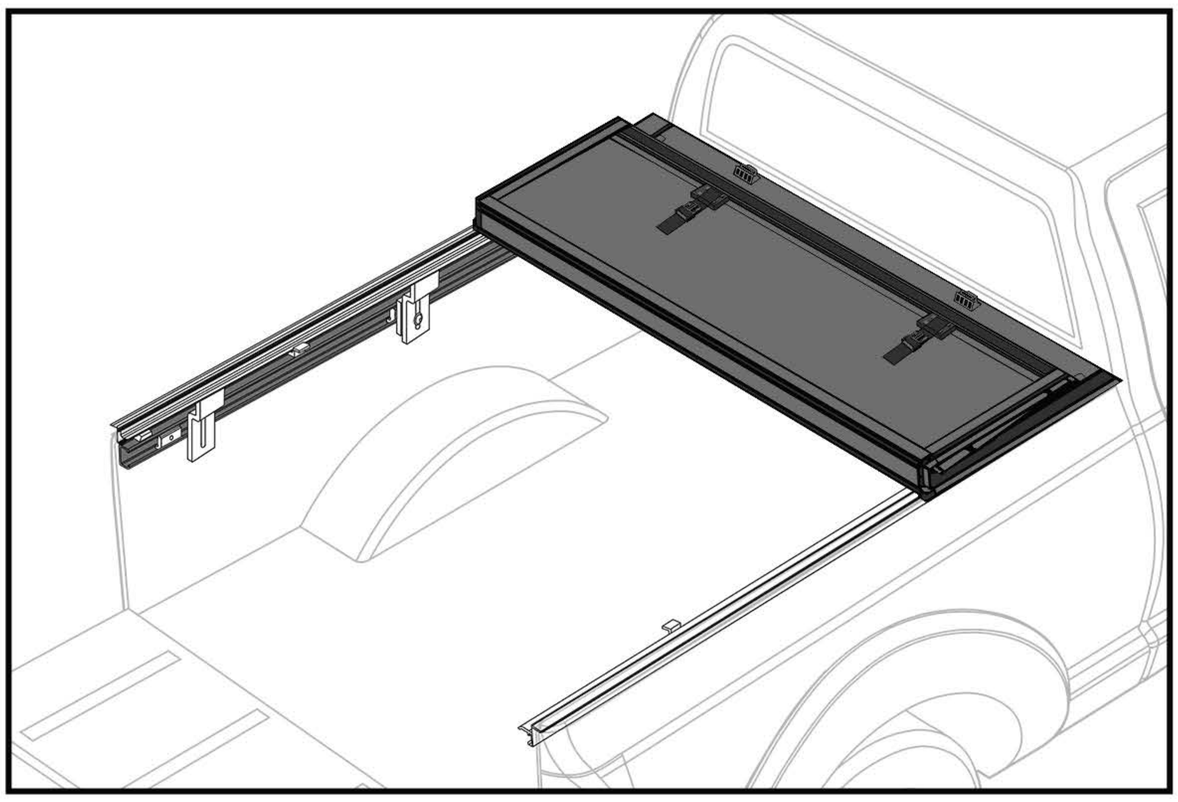

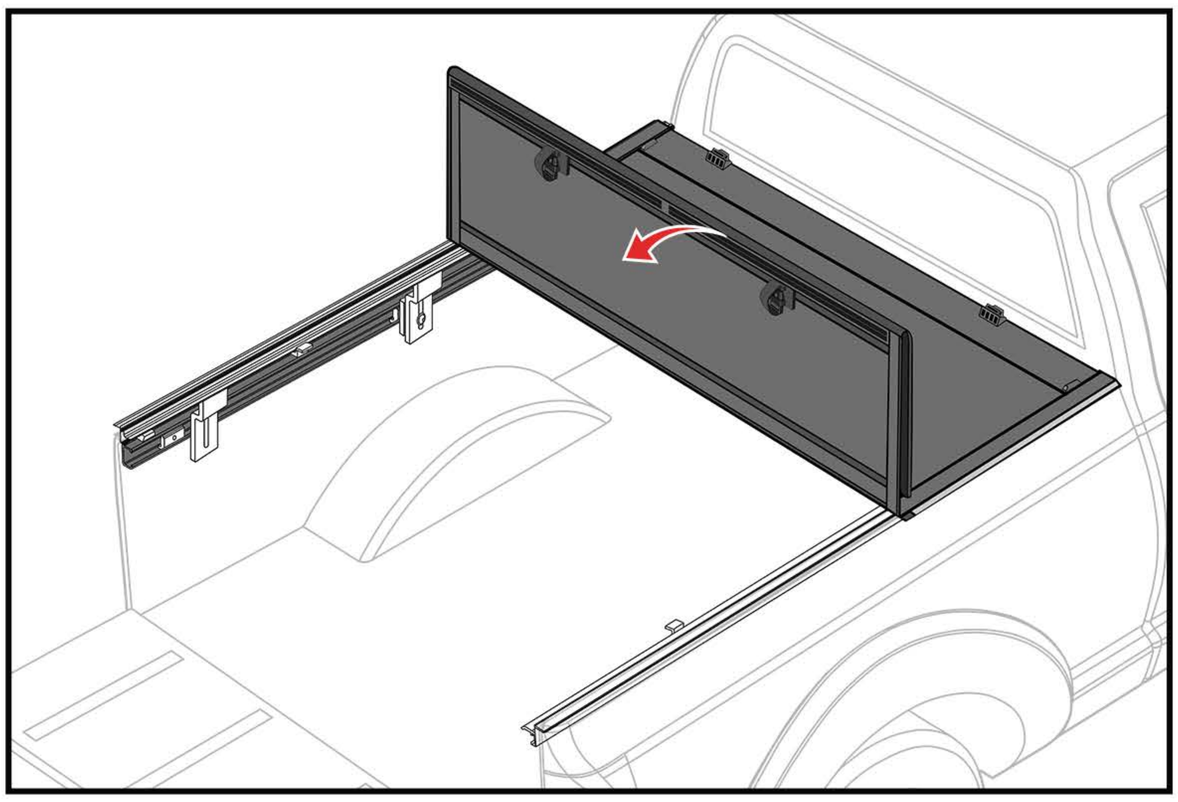

Adjust the anti-tilt Bracket position to ensure the small locking block securely fastens to it when lowering the last panel. Fold the panel multiple times to confirm it latches properly. Lastly tighten the screw on the anti-tilt Bracket to make it stay in place.

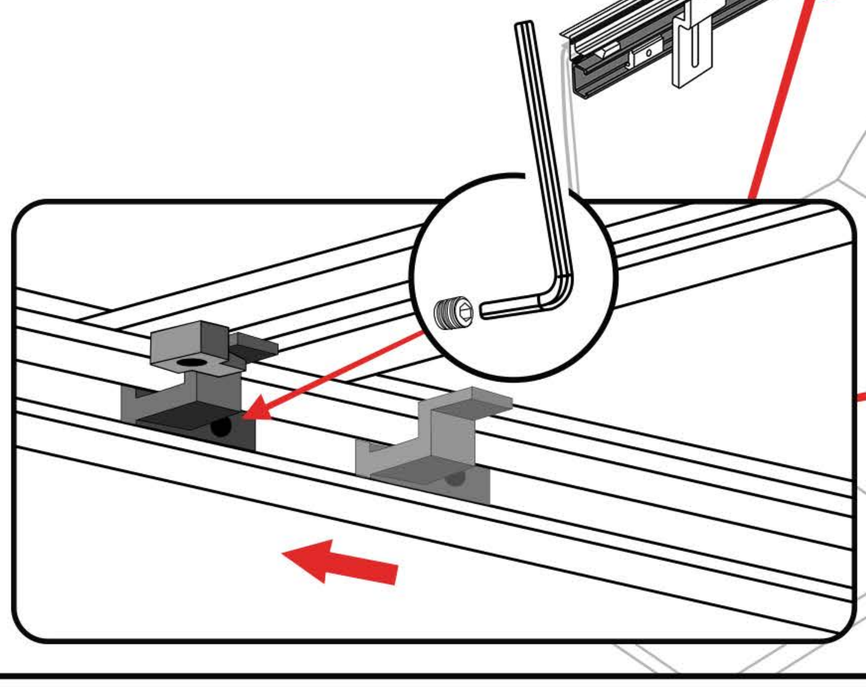

After fixing the other movable sliders on the guide rail, install the remaining four clamps in place

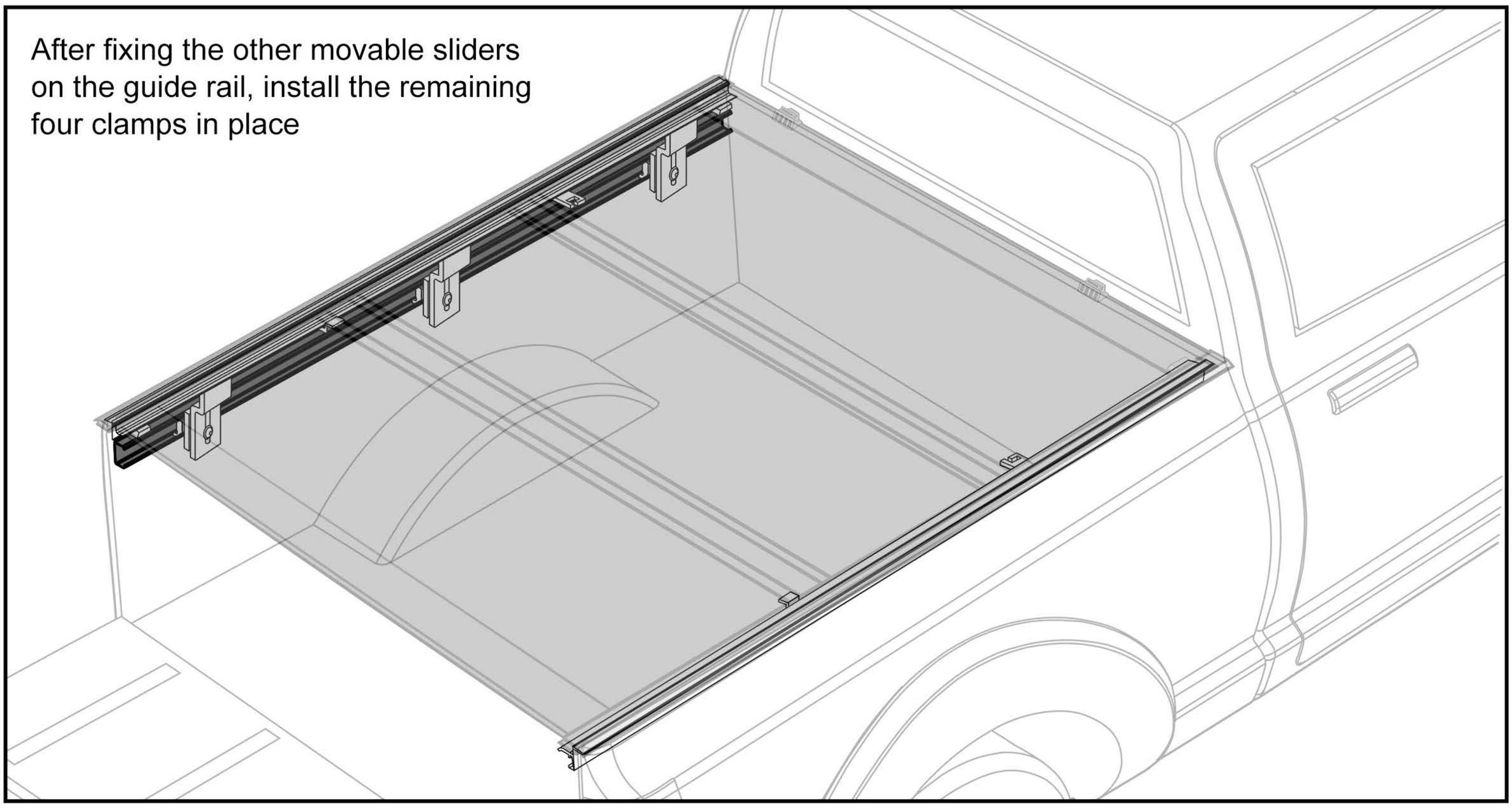

Finally, close the truck cover to complete the installation.

Note: Seals on the side of the cover may appear wrinkled shortly after the installation. They settle down with sufficient amount of sunlight.

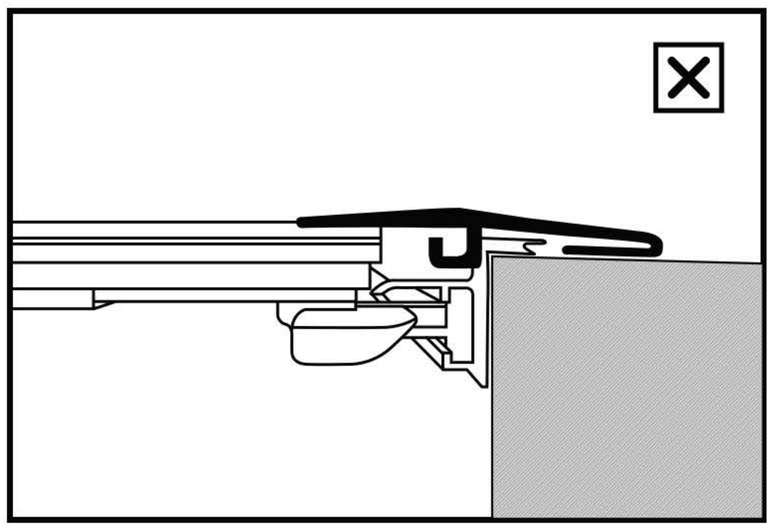

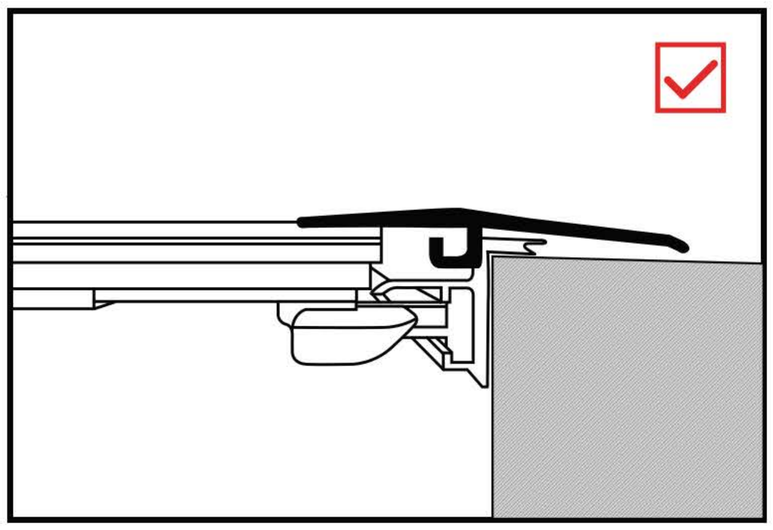

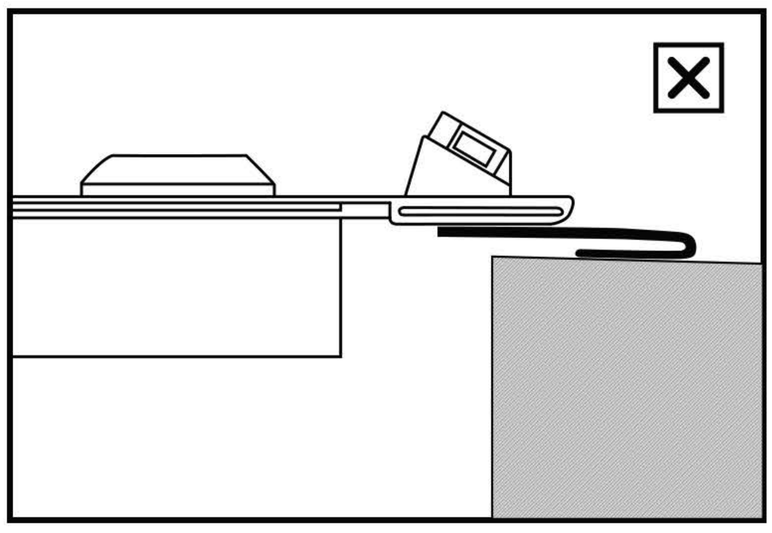

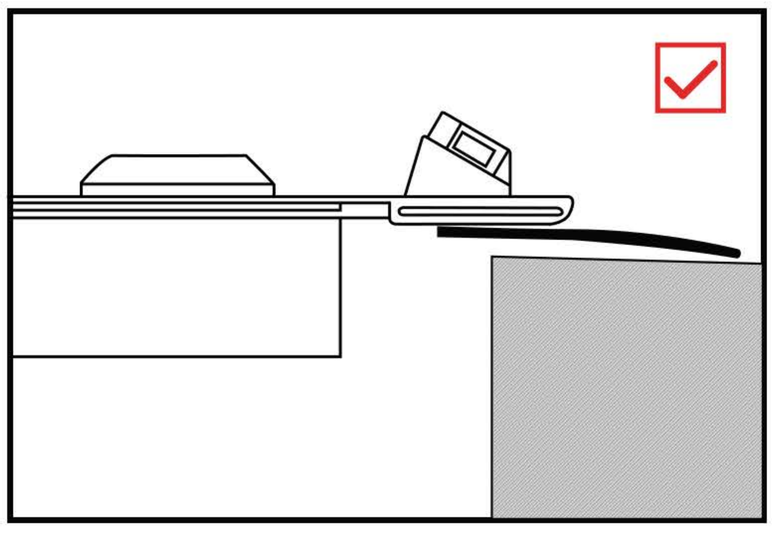

Check Side Gaskets and Bulkhead Gasket are properly placed to limit the water entry

CAUTION Rough road surfaces can cause high-frequency vibrations, leading to the need for adjustments in the position of the truck cover. Regularly check if your truck cover is in the correct position within the truck bed, and inspect all connectors and fastening blocks to ensure they are functioning properly.

4 Maintenance

1. We Recommends The User to Check The Cover Is Securely Attached To The Truck Bed Regularly.Look For Any Loose Bolts Due To Driving Vibration,Cargo Contact,etc. Make Sure All Mount Points of The Cover Are Properly Attached.

2. Use a Sponge or Soft Cloth With Water and Soap to Gently Remove Any Dust Or Dirty Off the surface, Pls washing out the sand before cleaning .

3. Pls don't accelerate rapidly or decelerate sharply when the cover standing,Fully Unfold the cover if the truck bed is empty.

4. Loading less than 100KGS on the surface of cover, sharp goods is forbidden to contact the surface.

5 After-sale Service

Thank you for choosing our product. We take pride in its quality and recommend professional installation with adherence to the user manual. Should you need assistance, paid repair services are available.

Retain your purchase receipt for verification. Please note that damages caused by modifications, accidents, misuse, non-genuine parts, or force majeure are not covered. For optimal safety, we advise regular inspections and use of manufacturer-recommended accessories.

Your satisfaction drives our commitment to delivering lasting reliability.