Real-Time GPS Tracker With Shock-Based Self-Defence For Women

[1]A.V.Veera Sivagami Pandi,[2] A.Harini,[3]A. Irin Amal Felshiya,[4]P.Gayathri,[5]V.Esakkiammal

[1]Assistant professor, [2,3,4,5]UGStudent
Department of Electronics and Communication Engineering
Thamirabharani Engineering College, Tirunelveli - 627358, India.

[1]veerasivagamipandi@gmail.com, [2]hariniaruna25@gmail.com, [3]irinfelshiya07@gmail.com, [4]gayathrip112004@gmail.com, [5]kpvenkat19742@gmail.com

***Abstract*—Women safety remains a critical challenge despite technological advancements in modern society. In emergency situations such as harassment, stalking, or physical assault, rapid response and timely alert generation are essential. This paper presents the design and implementation of a compact women safety device that integrates location-based emergency alert communication with a shock-based self-defence mechanism. The proposed system is developed using an embedded microcontroller platform and is designed for low-power, standalone operation. Upon emergency activation, the device provides immediate self-defence and transmits an alert message to predefined contacts, with location details included when available. Experimental evaluation indicates reliable system response, timely alert transmission, and energy-efficient operation. The proposed device offers a compact, low-cost, and practical solution suitable for real-time women safety applications.**

***Index Terms*—Women Safety, Embedded Systems, Emergency Alert, GPS Tracking, GSM Communication, Self-Defence Device.**

I. INTRODUCTION

Women's safety has emerged as a major social concern worldwide due to the increasing number of incidents related to harassment, assault, and violence. Despite various awareness programs and legal measures, many women continue to face unsafe situations in public and private spaces. In such emergencies, the ability to respond quickly, seek help, or protect oneself plays a crucial role in reducing the severity of an incident. Therefore, there is a strong need for effective technological solutions that can provide timely assistance and improve personal security.

Recent advancements in embedded systems and communication technologies have enabled the development of compact safety devices aimed at assisting women during critical situations. Several existing solutions focus on smart phone-based applications or wearable systems that transmit the user's location to emergency contacts. However, these approaches often depend on continuous device usage, internet connectivity, or manual interaction, which may not always be feasible during emergencies. High power consumption and reliance on external devices further limit their practicality for long-term, portable use.

To overcome these limitations, this paper proposes a standalone women safety device that integrates emergency alert communication with a shock-based self-defence mechanism. The system is designed to operate in a low-power mode under normal conditions and activate only when an emergency occurs. Upon activation, the device provides immediate self-defence while transmitting an emergency alert to predefined contacts. The focus of the proposed system is on simplicity, reliability, fast response, and energy-efficient operation, making it suitable for real-time women safety applications.

II. LITERATURE SURVEY

In [1], the authors present a micro controller-based women safety tracker device aimed at addressing the increasing crimes against women. The system integrates location tracking and emergency alert mechanisms using Global Positioning System (GPS) and Global System for Mobile Communications (GSM) technologies. A dual-alarm approach is proposed, where one alarm is manually triggered through a panic button and the other is automatically activated using motion and physiological sensors when the user is unable to initiate the alert. Upon activation, the device transmits the user's location to predefined emergency contacts. The system further includes sensor-based anomaly detection to identify sudden movements or distress conditions and supports two-way communication through a companion mobile application. Although the proposed solution enhances emergency alert reliability by combining manual and automatic triggering mechanisms, it relies on continuous sensor monitoring and multiple peripheral components, which may increase power consumption and system complexity. Additionally, the absence of an immediate physical self-defence mechanism limits the user's ability to deter the attacker and gain escape time during critical situations.

In [2], the authors present an IoT-based wearable emergency button for women's safety. The system is designed to generate quick emergency alerts using a push-button, making it easy to operate during stressful situations. When activated, the device collects the user's real-time location and sends an Short Message Service (SMS) alert to pre-stored contacts through cellular communication. The system works independently of smartphones and internet connectivity, which improves reliability in Low-network or rural areas, similar to the approach used in this work. Experimental results show reliable alert transmission and acceptable location accuracy. However, the system mainly focuses on alert generation and tracking and does not provide any self-defence mechanism, which limits the user's ability to resist the attacker or gain escape time.

In [3], the authors present a surveillance-based wearable safety device designed for women, integrated into a shock jacket. The system provides emergency alert generation, real-time location sharing, and a non-lethal self-defence mechanism to assist the user during critical situations. Upon activation through a panic button, the device sends alert messages with location details to predefined contacts and enables an electric shock feature to temporarily deter the attacker. The solution is designed to operate independently of mobile phones, improving reliability during emergencies. Performance evaluation shows quick alert transmission and acceptable location accuracy. However, the system is relatively bulky due to jacket-based integration and focuses mainly on continuous surveillance and monitoring. This may limit its practicality for everyday use and increase power consumption, highlighting the need for a more compact, energy-efficient, and event-driven safety device.

In [4], the authors present a self-defence system for women safety that integrates GPS and GSM technology with an electroshock mechanism. The system uses a panic button to trigger emergency actions. When activated, the device obtains the victim's location using the GPS module and sends an SMS alert with location details to predefined contacts and near by authorities through the GSM network. In addition to alerting, the system includes a non-lethal electric shock circuit that can temporarily disable the attacker, allowing the victim to escape. The proposed system improves personal safety by combining alert generation and self-defence features. However, the system mainly focuses on basic communication and protection mechanisms and does not emphasize compact design or power optimization.

In [5], the authors propose an emergency security device for women using GSM and GPS technology. The system is designed to provide quick assistance when a woman is in danger by using a push-button mechanism. When the button is pressed, the device obtains the user's location through the GPS module and sends an SMS alert containing the latitude and longitude coordinates to predefined contacts using the GSM module. The system also includes sensors such as heart rate and temperature sensors to monitor the physical condition of the user during emergencies. Experimental results show that the device can successfully transmit alert messages and location information in real time. However, the system mainly focuses on monitoring and alert mechanisms and does not include a self-defence feature to physically protect the user from an attacker.

III. Proposed System

Block Diagram

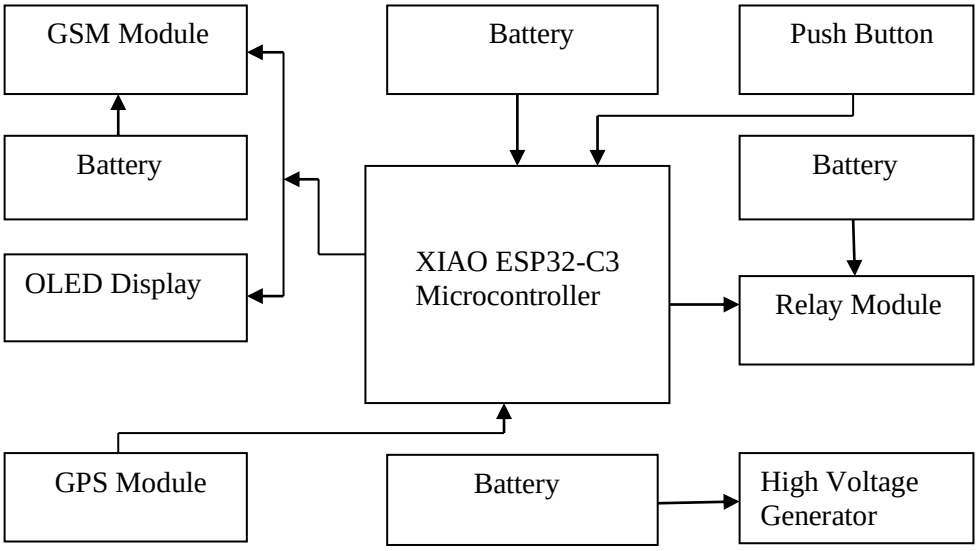

Fig.3.1:Block Diagram Of Proposed System

The proposed system presents a compact and energy-efficient women safety device that integrates real-time location tracking, emergency alert transmission, and a shock-based self-defence mechanism. The system is designed as a standalone embedded solution that operates independently of smart phones and internet connectivity, ensuring reliable performance during emergency situations.

To minimize power consumption and extend battery life, the device operates primarily in a low-power sleep mode. The system is activated only when the user presses an emergency push button. Upon activation, the controller immediately triggers a relay-based high-voltage shock module for a predefined duration to provide temporary self-defence and help the user gain escape time. Simultaneously, the communication process is initiated to request location in formation and prepare emergency alerts.

The system attempts to acquire the user's location within a limited time window. If a valid location fix is obtained, an emergency alert containing the location details is transmitted to predefined contacts via SMS. In case a valid location fix is not available with in the specified duration, an emergency alert is still sent without location information to ensure that help is notified without delay. After completing the alert transmission and self-defence operation, the system safely returns to sleep mode, conserving energy until the next activation.

The proposed design emphasizes simplicity, fast response, low power consumption, and reliability. By combining an event-driven activation mechanism with a self-defence feature, the system provides both immediate protection and timely communication support, making it suitable for real-time personal safety applications.

Components

1. Microcontroller: The XIAO ESP32-C3 is a compact, low-power embedded microcontroller platform used as the core controller of the proposed system. It controls all system operations such as monitoring the emergency push button, activating the relay and high-voltage generator, acquiring GPS data, transmitting alert messages through the GSM module, and managing low-power sleep modes to reduce energy consumption.

2. GSM Module: TheSIM800L GSM module is used to transmit emergency alert messages to predefined contacts through the cellular network. It enables SMS-based communication in dependent of internet connectivity, ensuring reliable alert delivery even in remote or low-network areas.

3. GPS Module: The NEO-6M GPS module is responsible for acquiring real-time location data in the form of latitude and longitude. The module communicates with the microcontroller to provide location details that are included in the emergency alert message when a valid GPS fix is obtained.

4. High Voltage Generator: The high-voltage generator functions as a self-defence unit in the system. Upon activation, it delivers a non-lethal electric shock intended to deter an attacker and provide the victim with sufficient time to escape during emergency situations.

5. Relay Module: The relay module is used to safely interface the low-voltage microcontroller with the high-voltage generator. It electrically isolates the control circuit and allows the ESP32-C3 to switch the high-voltage unit ON and OFF for a predefined duration.

6. Push Button: The push button acts as the emergency trigger for the entire system. When pressed, it initiates the alert sequence by waking the microcontroller from sleep mode, activating the self-defence mechanism, starting GPS tracking, and sending emergency SMS alerts.

7. OLED Display: The 0.96"Organic Light-Emitting Diode (OLED)display visually shows the device’s status, including GPS connection, GSM signal, battery level, and activation alerts. It consumes very low power and provides a clear, bright interface suitable for compact embedded systems.

IV. METHODOLOGY

System Initialization

At power-up, the embedded microcontroller initializes all input and output pins and configures the emergency push button as an interrupt source. To minimize power consumption, the system remains in sleep mode during normal operation while continuously monitoring the button state. The GSM and GPS modules are kept in active until an emergency event occurs.

Electroshock Activation

When the emergency push button is pressed, the microcontroller immediately wakes from sleep mode and activates the relay module connected to the high-voltage generator. The electroshock mechanism is triggered for a predefined short duration to provide instant self-defence. This controlled, non-lethal shock is intended to temporarily deter the attacker and create an opportunity for the user to escape. After the set time interval, the relay is automatically switched OFF, safely disabling the electroshock unit.

Emergency Message Transmission

After the electroshock cycle is completed, the system activates the communication process. The GSM and GPS modules are powered ON, and the system attempts to acquire the user’s location within a predefined time window. If a valid location fix is obtained, an emergency SMS containing the location details is sent to predefined contacts. If location data is unavailable, an emergency alert message is transmitted without location information. Upon completion of message transmission, the system returns to low-power sleep mode.

PCB Design and Implementation

The proposed system is implemented using a Printed Circuit Board (PCB)designed in KiCad. The PCB is a compact two-layer board with top and bottom copper layers used for routing. All components such as the XIAO ESP32-C3, GSM module, GPS module, relay, and passive elements are placed carefully to reduce wiring complexity. Signal traces are kept short and properly spaced to ensure reliable operation. The high-voltage shock circuit is separated from the control circuit to avoid interference and improve safety. Ground connections are provided properly to maintain stable performance. The design is checked using Design Rule Check (DRC) to ensure it is suitable for fabrication.

Fig.4.1 shows the PCB layout of the proposed system.

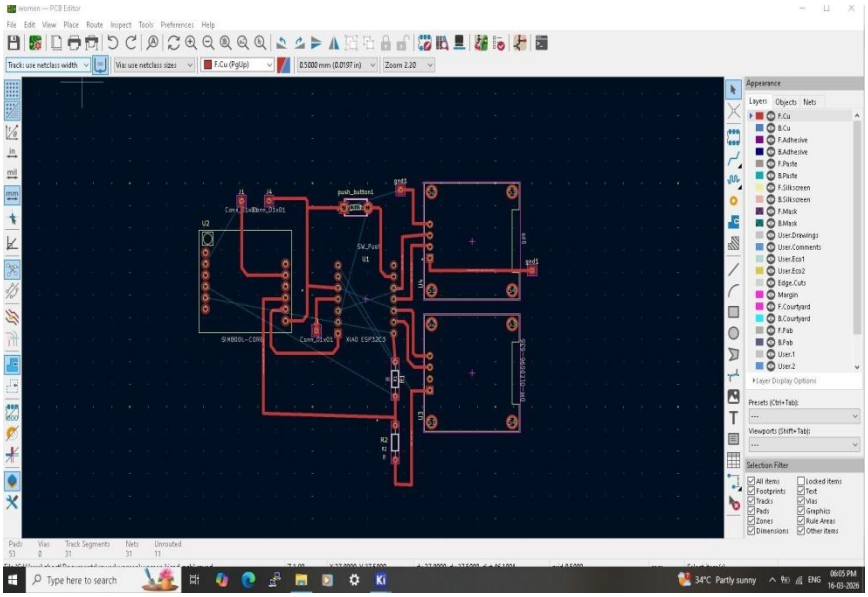

Fig.4.1: PCB Layout Of The System

Fig.4.2 shows the schematic of designed PCB.

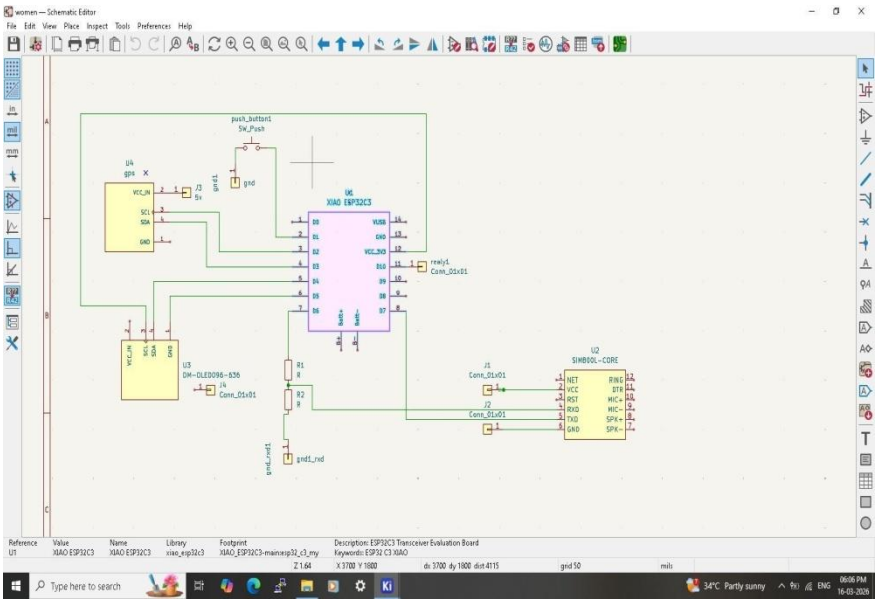

Fig.4.2: Schematic Diagram Of The System

V. RESULT AND ANALYSIS

Fig. 5.1 shows the hardware prototype of the proposed women safety system developed using the XIAO ESP32-C3 microcontroller. The system integrates a GPS module, GSM module, relay-controlled high-voltage generator, and an emergency push button in a compact form.

When the emergency button is pressed, the electroshock module is activated instantly for a predefined duration to provide immediate self-defence. After deactivation, the system initiates location acquisition and transmits an emergency SMS to pre-registered contacts. If a valid GPS fix is available, the message includes location details; otherwise, an alert is sent without location information (Fig. 5.2).

The experimental results confirm reliable alert transmission, quick system response, and stable operation under GSM network availability. The proposed device is lightweight, low-cost, and operates without internet or smart phone dependency, making it suitable for real-time women safety applications.

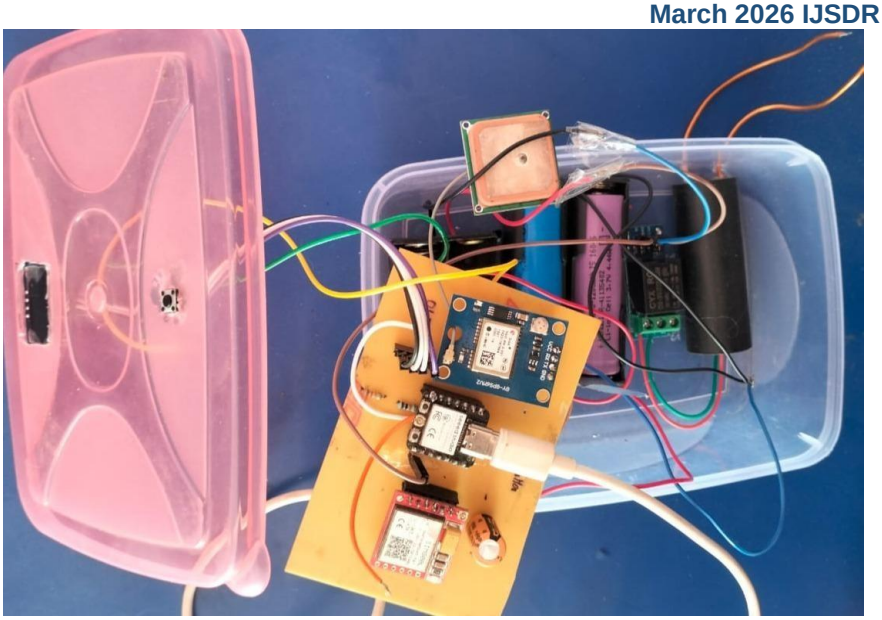

Fig5.1: Hardware Prototype Of Proposed System

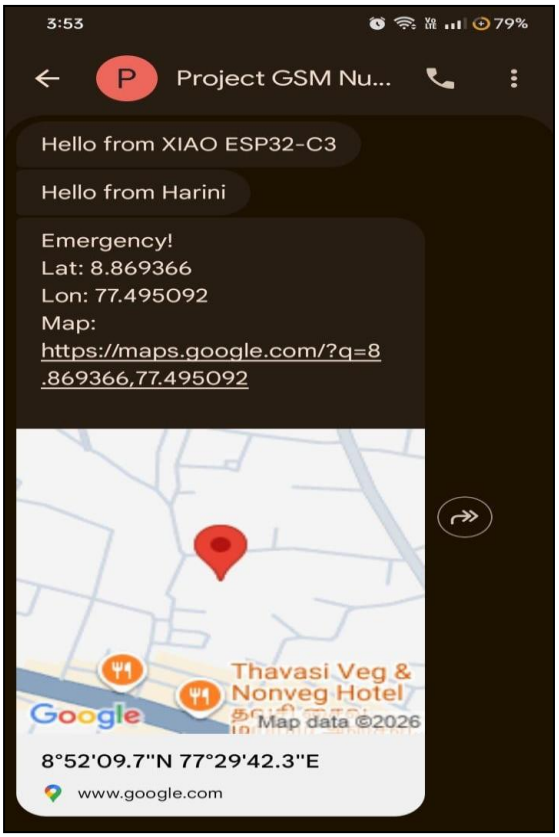

Fig5.2: Message Sent To The Contacts

VI. Conclusion And Future Scope

This paper presented a compact and cost-effective women safety device that focuses on immediate self-defence followed by emergency communication. The system operates in a low-power sleep mode and activates only during critical situations, ensuring efficient energy usage. Upon triggering, a non-lethal electroshock mechanism is enabled to temporarily deter the attacker and provide valuable escape time. After this, the device transmits emergency alerts along with location information when available.

A dedicated PCB was designed to integrate all system components into a compact and reliable hardware platform. The PCB design ensures proper component placement, reduced size, and stable operation, making the device suitable for real-time applications. The sequential operation of self-defence followed by communication improves reliability and response time.

Unlike conventional solutions that depend on smart phones or continuous monitoring, the proposed system provides a simple, standalone, and fast-acting approach. The absence of audible alerts further enhances its effectiveness in sensitive or high-risk environments. Overall, the system offers a practical and efficient solution for improving personal safety.

The proposed system can be further enhanced to improve functionality and performance. Future improvements may include the integration of audio or video modules for evidence collection during emergencies. Location accuracy can be improved by using hybrid positioning techniques. From a hardware perspective, the PCB design can be further optimized by reducing board size, improving routing, and using multi-layer designs for better signal integrity and noise reduction.

.

REFERENCES

[1] Mrs. S. Vasanthi, G. Sai Pranitha, A. Keerthi, B. Avinash, 'Micro controller based women safety tracker device', International Journal of Novel Trends and Innovation, Volume 2, Issue 4, pp. a75 - a82, 2024.

[2] Dr. Sujata Mallapur, Karunyahanshika, Pooja S W, Vaishnavi P A, Vaishnavi N M, 'IoT-Powered emergency button for women's safety', Journal of Scientific Research and Technology, Volume-3, Issue-7, Pages: 297-308, 2025.

[3] Dr. K. Ayyar, K. R. Ganesh, Harini Preetha.K, Preetha Sree.K, Priyadharshini.S, Subashini.R, 'Surveillance wearable safety device for women using raspberry pi', Journal of Emerging Technologies and Innovative Research (JETIR), Volume 12, Issue 3, PP.g1 - g9, 2025.

[4] P. Swapnarani, P. Ramchandar Rao, and Vinit Kumar Gunjan, 'Self defence system for women safety with location tracking and SMS alerting through GPS and GSM networks', Gunjan, V.K., Zurada, J.M. (eds) Modern Approaches in Machine Learning & Cognitive Science: A Walkthrough. Studies in Computational Intelligence, vol 1027. Springer, Cham, pp. 361 - 368, 2022.

[5] P. Manohar, B. Indrani, B. Mounika, B. Bhavana, Y. Hemanth Kumar, P. Krishna Govardhan Reddy, 'Emergency security device forwomen using GSM and arduino with GPS tracking', International Journal of Research in Engineering and Science (IJRES), Volume 11, Issue 3, PP. 469 - 474, 2023.

[6] K.S.SagarReddy, N.Tarakram Sai Kalyan, Sk.Masthansharif, T.Dhanush, V.Venkatesh, 'Trigonous shielding system for women', International Journal of Research in Engineering, IT and Social Sciences', Volume 13, Issue 05, Page 131-137, 2023.

[7] Priya Ulhas Jagtap, Vaishnavi Digambar Handibag, Pragati Vikas Patil, 'Women safety device with GPS tracking & alerts', International journal of creative research thoughts (IJCRT), Volume 13, Issue 6, pp. e657 - e663, 2025.

[8] Dr.K.Sampathkumar, Dr.A.Deepa, K.Mohanapriya, P.Backiyalakshmi, D.Pavithra, 'Design and implementation of women safety system using GSM and GPS', International Journal of Innovative Research in Science, Engineering and Technology (IJIRSET), Volume 12, Issue 9, pp. 11996 - 12003, September 2023.

[9] P. Sravani, B. Sindhu, N. Shashank, P. Pranaya, S. Tejaswi, 'Women safety system using Gps and Gsm tracking', International Journal of Engineering & Science Research, Vol-15, Issue-2/738-748, pp. 738 - 748, 2025.

[10] Chetan H R, Kishor K M, Nandish A B, Manoj S R, Santhosh S, 'Women security system using GPS tracker and safe jacket', International Journal of Engineering Research & Technology (IJERT), Volume 11, Issue 05, pp. 242 - 247, 2023.