CSED311 Lab2: Single-Cycle CPU

TA email: csed311-ta@postech.ac.kr

Assignment

- Use ModelSim or Vivado
- Implement a single-cycle RISC-V CPU (RV32I)
  - Single-cycle CPU
    - Datapath
      - ALU
      - Register file
    - Control unit
      - Generate the control signals used in the datapath
  - Your implementation of the CPU should process one instruction in a cycle

Assignment

- A skeleton code and testbench will be provided
  - Memory.v, RegisterFile.v, cpu.v
  - Please do not modify top.v
  - 2 test code will be provided
    - basic_ripes.asm, basic_mem.txt -> non-control flow test
    - loop_ripes.asm, loop_mem.txt -> control flow test
    - Use *_ripes.asm for Ripes (will be explained later)
    - Use *_mem.txt for Verilog

RV32I

- All instructions that you need to implement are in opcodes.v file
- We are going to use the ECALL instruction to halt the machine at the end of a program
  - ECALL instruction executed with GPR[x17]==10 will halt the machine

    -- Set the **is_halted==1,** then the Verilog simulation will end
- Other instructions follow the RV32I manual
  - References:
    - See riscv-spec-v2.2.pdf provided for the lab
    - https://msyksphinz-self.github.io/riscv-isadoc/html/rvi.html#sltu

RV32I

imm[20|10:1|11|19:12]				rd	1101111	JAL
imm[11:0]		rs1	000	rd	1100111	JALR
imm[12|10:5]	rs2	rs1	000	imm[4:1|11]	1100011	BEQ
imm[12|10:5]	rs2	rs1	001	imm[4:1|11]	1100011	BNE
imm[12|10:5]	rs2	rs1	100	imm[4:1|11]	1100011	BLT
imm[12|10:5]	rs2	rs1	101	imm[4:1|11]	1100011	BGE
imm[11:0]		rs1	010	rd	0000011	LW
imm[11:5]	rs2	rs1	010	imm[4:0]	0100011	SW
imm[11:0]		rs1	000	rd	0010011	ADDI
imm[11:0]		rs1	100	rd	0010011	XORI
imm[11:0]		rs1	110	rd	0010011	ORI
imm[11:0]		rs1	111	rd	0010011	ANDI
0000000	shamt	rs1	001	rd	0010011	SLLI
0000000	shamt	rs1	101	rd	0010011	SRLI
0000000	rs2	rs1	000	rd	0110011	ADD
0100000	rs2	rs1	000	rd	0110011	SUB
0000000	rs2	rs1	001	rd	0110011	SLL
0000000	rs2	rs1	100	rd	0110011	XOR
0000000	rs2	rs1	101	rd	0110011	SRL
0000000	rs2	rs1	110	rd	0110011	OR
0000000	rs2	rs1	111	rd	0110011	AND
000000000000		00000	000	00000	1110011	ECALL

Modularization

- Modularize the main CPU structure (strongly recommended)
  - Datapath
    - ALU
    - Register file
  - Control Unit
  - Etc.
    - MUX, adder, ..
- You may modify the interfaces of some of the modules (e.g., control, imm_gen, etc.) but keep it well modularized

Magic Memory

- In Memory.v
- It is NOT a realistic model of the main memory
  - In our lab, memory works like a register file, except that the memory is byte-addressable and accessed with memory address instead of register ID
  - Real memory devices are much slower than CPUs
  - However, we assume there is a magic memory with very low latency for simplicity

Evaluation Criteria

- Source code
  - The score will be calculated based on the final register values (x1-x31) of the Verilog RTL after (unshared) testbenches for evaluation are executed (i.e., how many registers have the correct values)
  - You are encouraged to run your own program on your Verilog RTL model
- Report
  - You can write report in Korean or English
  - The report should include (1) introduction, (2) design, (3) implementation, (4) discussion, and (5) conclusion sections
  - Key points:
    - Single-cycle CPU design and implementation
    - Description of whether each module(RF, memory, PC, control unit, ..) is clock synchronous or asynchronous
    - Description of each stage in single-cycle CPU

Assignment Submission

- Submit your report and source code on PLMS with filename:
  - Lab2_{TeamID}_{StudentID1}_{StudentID2}.pdf
    - PDF file of your report
  - Lab2_{TeamID}_{StudentID1}_{StudentID2}.zip
    - Zip file of your source code (without top.v)
    - Do not create a folder within the zip file

    Ex)

    - **Correct filename**: Lab2_99_20211111_20212222.zip
    - **Wrong filenames**: Lab2_Team99_20211111_20212222.zip, Lab2_John_20211111_20212222.zip, John_20211111_20212222.zip, Lab2_20211111.zip, John_Ann_Lab2.zip

Zip file content
(note there is no folder):

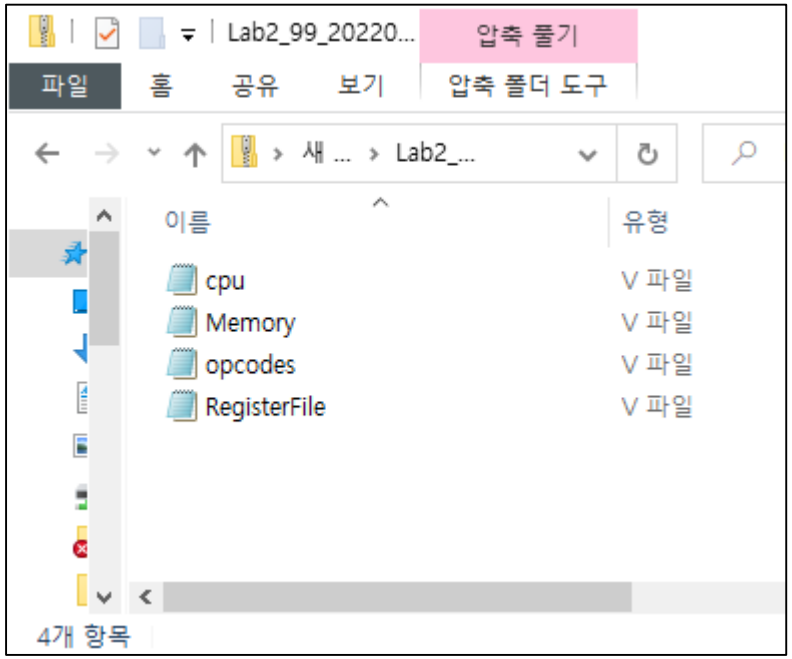

Due date

- 1st week (optional) submission (Non-control flow instructions only)
  - Deadline: 2022. 3. 22 09:00 a.m.
  - This is not mandatory. The result will not be reflected in the lab score.
  - We will run the TBs for testing non-control flow instructions and let you know the score
- 2nd week final submission (All instructions required in this lab)
  - **Code: 2022. 3. 29 / 09:00 a.m.**
  - **Report: 2022. 3. 29 / 23:59 p.m.**
  - This is the mandatory part that will be reflected in the lab score
  - Evaluation will be done with both non-control flow and control flow instructions

Ripes Simulator

Ripes

- Ripes is a visual computer architecture simulator and assembly code editor built for the RISC-V instruction set architecture
- Ripes can help you debug code

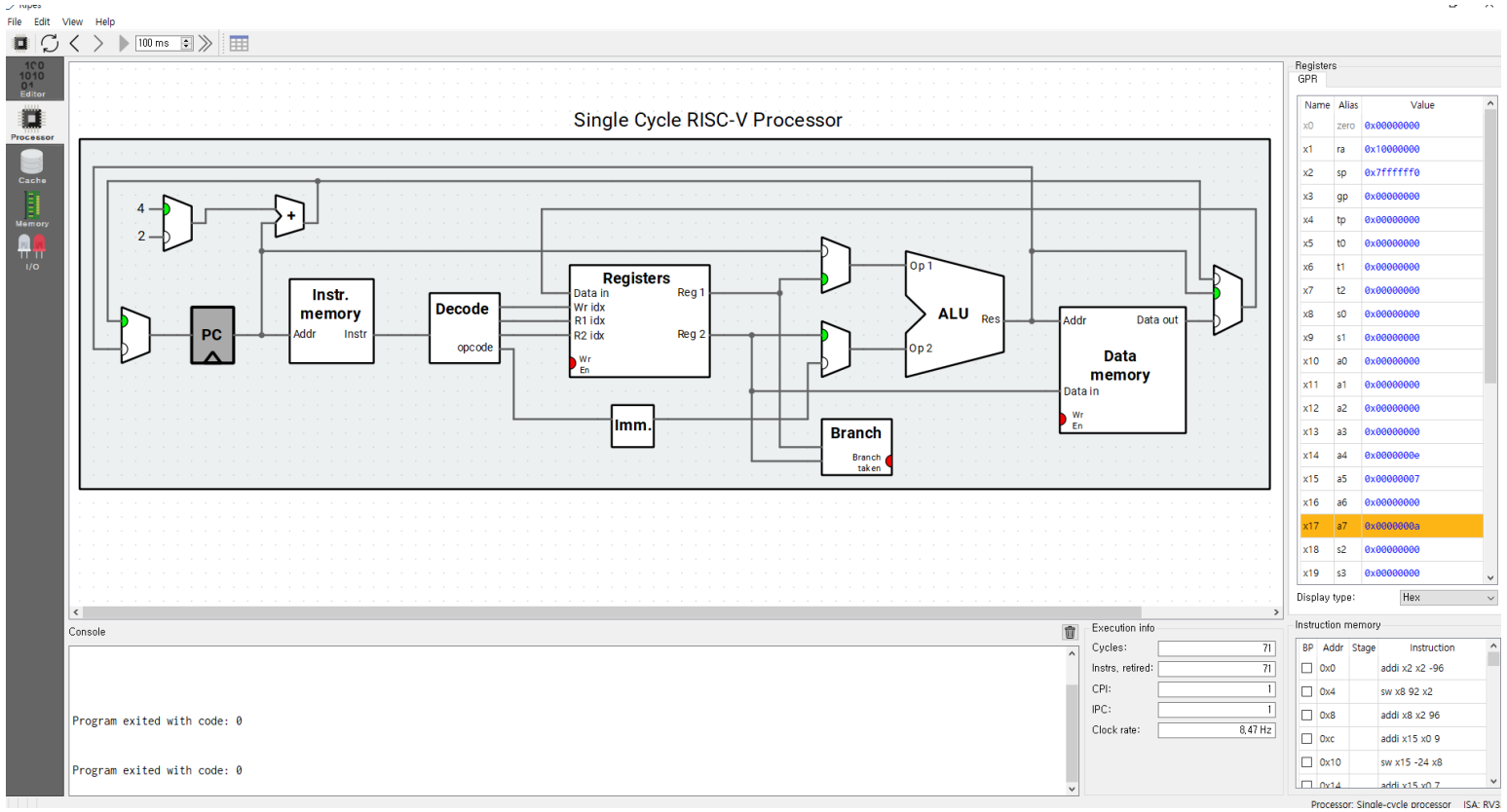

Ripes

- How to install?
  - https://github.com/mortbopet/Ripes/releases/tag/v2.2.4

▾ Assets 7

Ripes-v2.2.4-linux-x86_64.AppImage	29 MB
Ripes-v2.2.4-mac-x86_64.zip	30.1 MB
Ripes-v2.2.4-win-x86_64.zip	15 MB
Source.code.gz	13.7 MB
Source.code.zip	13.9 MB

- An error for VCRUNTIME140_1.dll may be displayed
  - In this case, please install the Microsoft Visual C++ redistributable package from the link below
  - https://docs.microsoft.com/en-US/cpp/windows/latest-supported-vc-redist?view=msvc-170

Ripes – Processor configuration

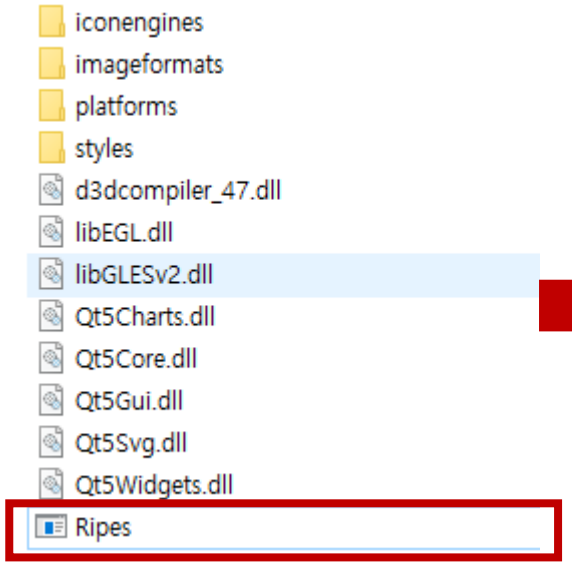

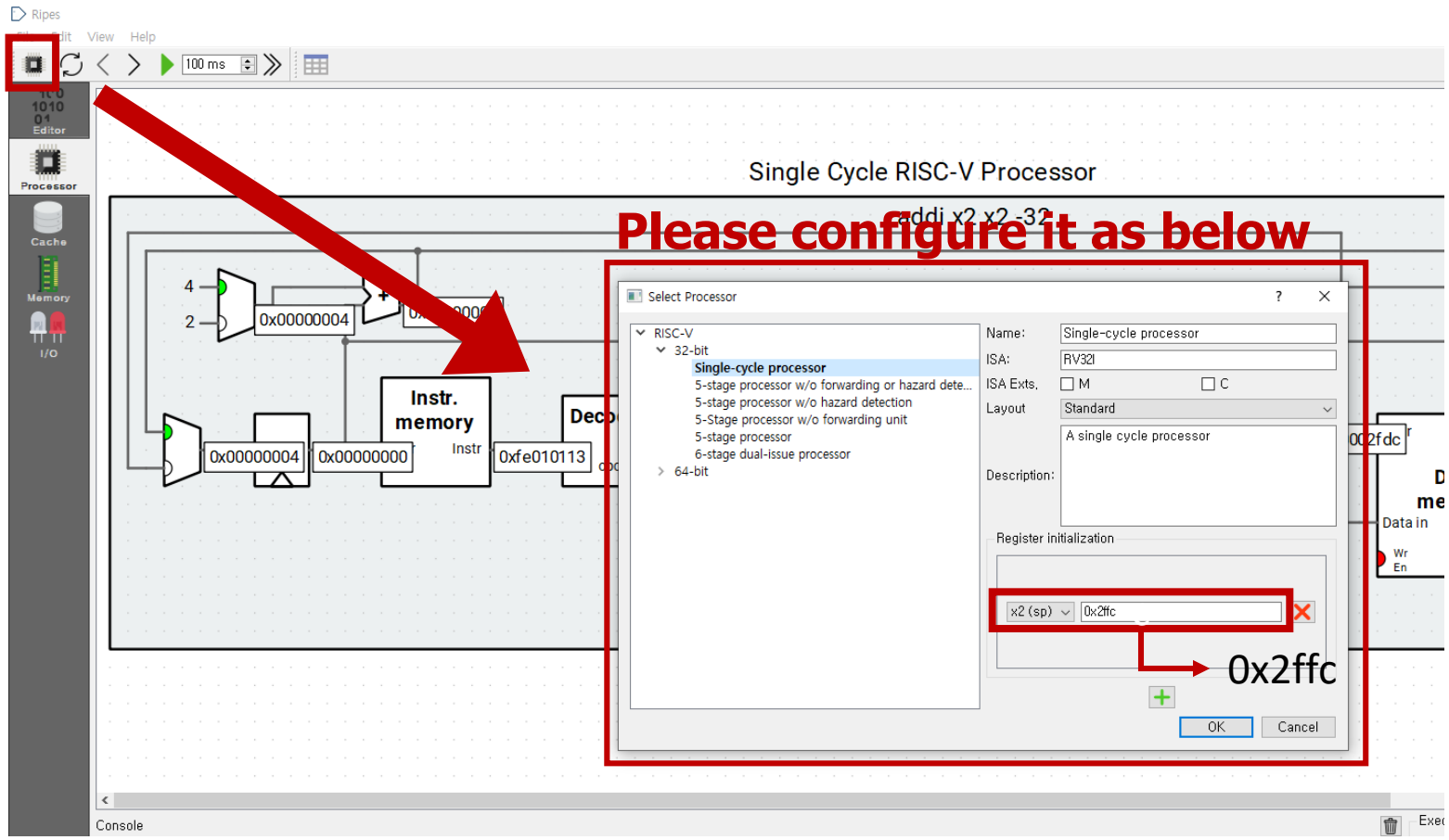

Ripes – Loading a program

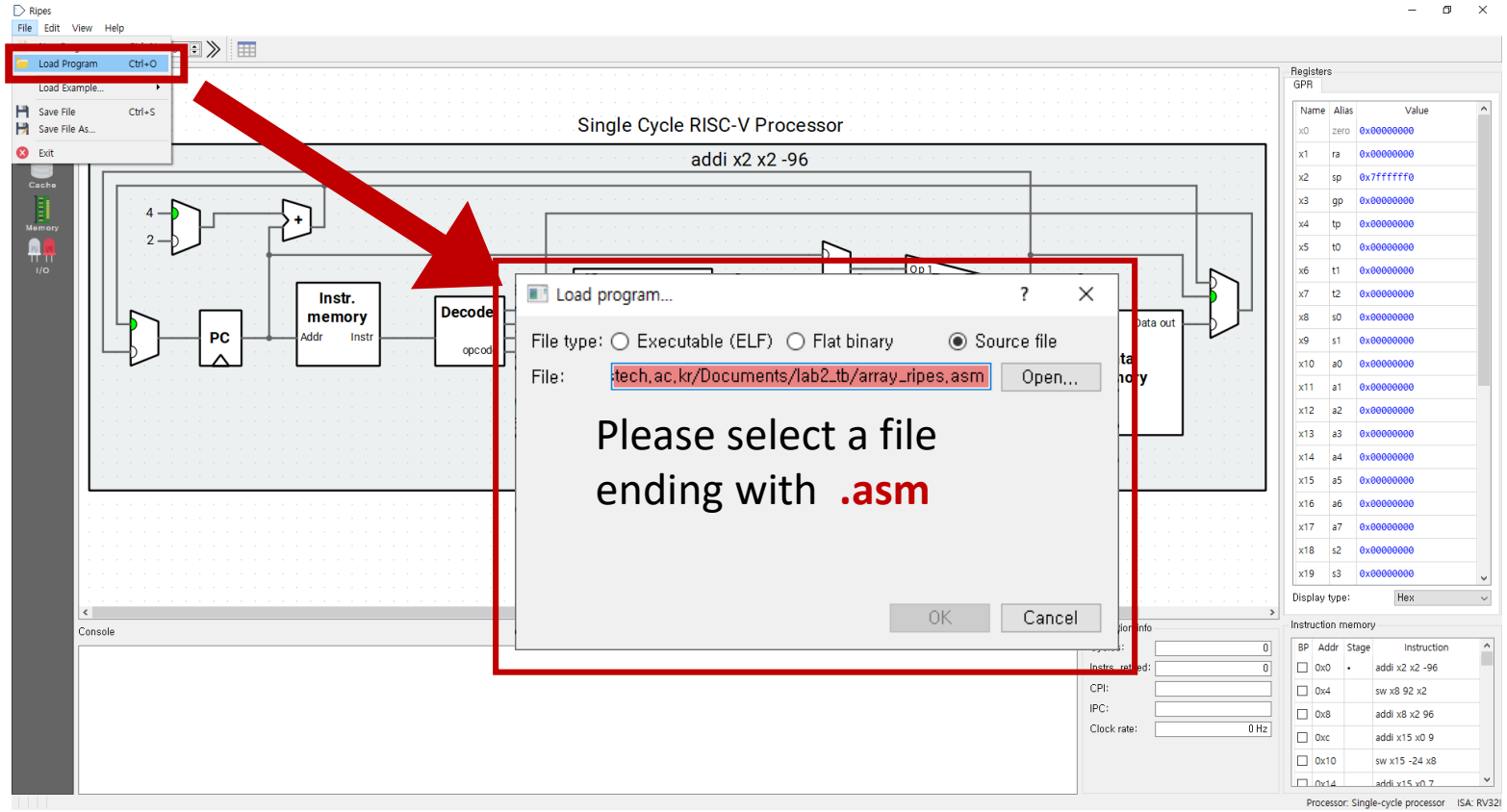

Ripes – Running the program

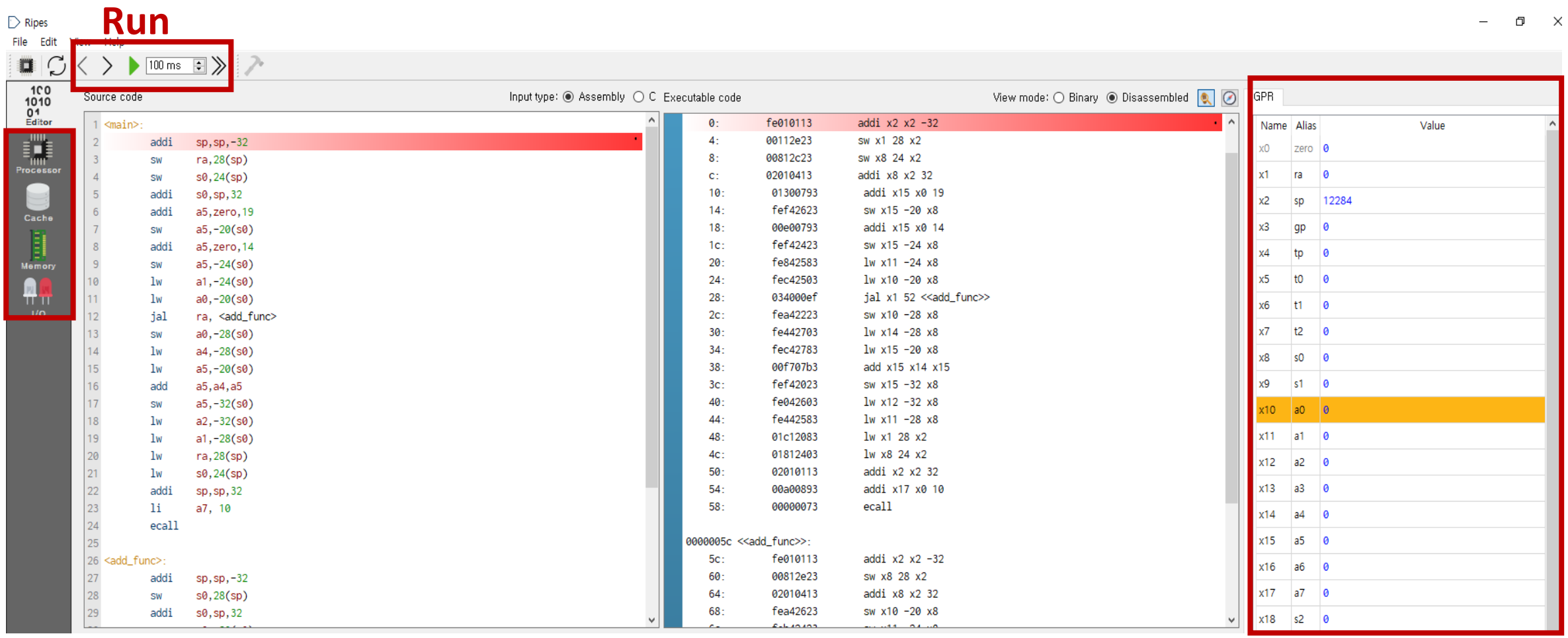

As you can see, assembly code uses pseudo-instructions and register aliases.
See “RISC-V Assembly Programmer’s Handbook” Chapter of RISC-V manual.

How to compile and run your own C program on Ripes and Verilog RTL

(Non-mandatory)

Cross-compiler

- How to install?
  - Use Docker (MacOS/Windows10/Linux Support)
    - For Windows10 users,
      - Use CSE Education Slurm Cluster to use Docker
        - You can request the account of CSE Education Slurm Cluster at the below link
        - https://postechackr.sharepoint.com/sites/cse/SitePages/CSE-Cluster-Howto.aspx?csf=1&e=qwAkG9&cid=dfb4c189-2455-4381-a8c1-2489054f57bb
      - Or, use WSL to run docker on your computer
  - Get docker image

    $ docker pull acplpostech/acpl_ubuntu_18.04_riscv:latest
  - Start docker

    $ docker run -v ~:/mnt -it --rm acplpostech/acpl_ubuntu_18.04_riscv:latest /bin/bash

Cross-compiler

- Risc-V Assembly Code Generate (Use /RISCV_Crosscompile/script.sh)

  $ cd /RISCV_Crosscompile

  $ ./script.sh file_name

C Code (example.c)

```c
int main()
{
        long long a, b, next;
        long long i;
        a = 0;
        b = 1;
        next = a + b;
        for(i = 0; i<10; i++)
        {
                a = b;
                b = next;
                next = a + b;
        }
        return 0;
}
```

./script.sh example

Assembly Code

```
add.o:     file format elf64-littleriscv


Disassembly of section .text:

0000000000000000 <main>:
   0:   fd010113                addi    sp,sp,-48
   4:   02813423                sd      s0,40(sp)
   8:   03010413                addi    s0,sp,48
   c:   fc043823                sd      zero,-48(s0)
  10:   00100793                addi    a5,zero,1
  14:   fef43423                sd      a5,-24(s0)
  18:   fd043703                ld      a4,-48(s0)
  1c:   fe843783                ld      a5,-24(s0)
  20:   00f707b3                add     a5,a4,a5
  24:   fef43023                sd      a5,-32(s0)
  28:   fc043c23                sd      zero,-40(s0)
  2c:   0300006f                jal     zero,5c <.L2>

0000000000000030 <.L3>:
  30:   fe843783                ld      a5,-24(s0)
  34:   fcf43823                sd      a5,-48(s0)
  38:   fe043783                ld      a5,-32(s0)
  3c:   fef43423                sd      a5,-24(s0)
  40:   fd043703                ld      a4,-48(s0)
  44:   fe843783                ld      a5,-24(s0)
  48:   00f707b3                add     a5,a4,a5
  4c:   fef43023                sd      a5,-32(s0)
  50:   fd843783                ld      a5,-40(s0)
  54:   00178793                addi    a5,a5,1
  58:   fcf43c23                sd      a5,-40(s0)
```

Cross-compiler

- Risc-V Assembly Code Generate (Use /RISCV_Crosscompile/script.sh)

  - Output file
    /RISCV_Crosscompile/{file_name}_ripes.asm -> for Ripes input

  $ mv /RISCV_Crosscompile/{file_name}_ripes.asm /mnt

  $ exit #exit docker

  - Now you can find {file_name}_ripes.asm in home directory

Caution

- Since we model RV32I without the “M” extension for multiply/divide, you can't use multiplication on the c code
- You can still multiply or divide by a power of 2 using shift left or right operations
- You will need to some additional instructions that are commonly generated by the compiler

Single-cycle CPU Datapath for LUI and AUIPC (Optional)

Additional datapath component

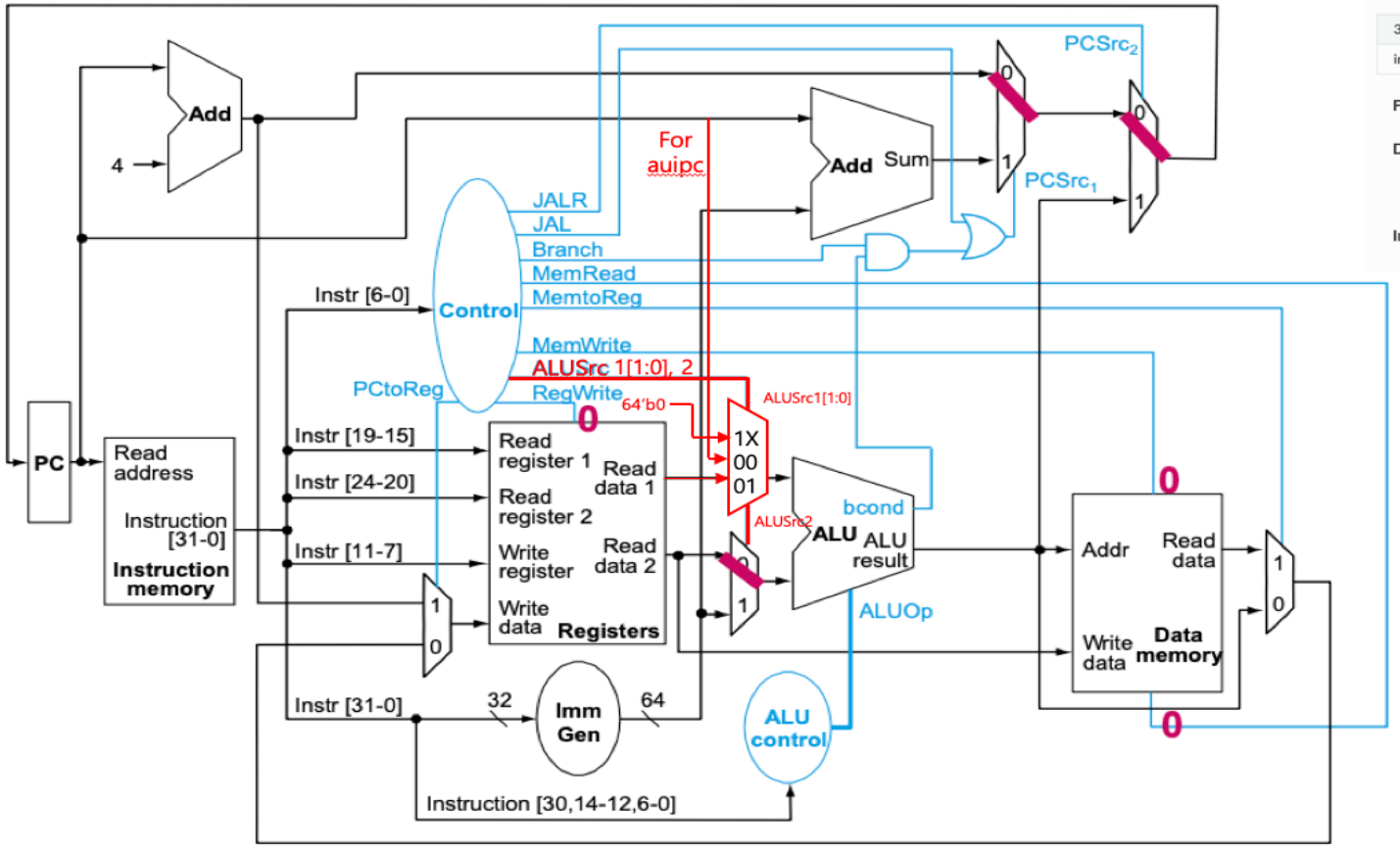

ALUSrc1[1:0] For LUI Instruction

lui

load upper immediate.

31-27	26-25	24-20	19-15	14-12	11-7	6-2	1-0
imm[31:12]					rd	01101	11

Format: lui rd,imm

Description: Build 32-bit constants and uses the U-type format. LUI places the U-immediate value in the top 20 bits of the destination register rd, filling in the lowest 12 bits with zeros.

Implementation: x[rd] = sext(immediate[31:12] << 12)

LUI Instruction
x[rd] = Immediate(shifted) + 64'b0

AUIPC Instruction
x[rd] = PC + Immediate(shifted)

Assembly post-processing in Ripes

1. Make new program with cross-compiler output file ({file_name}_ripes.asm)

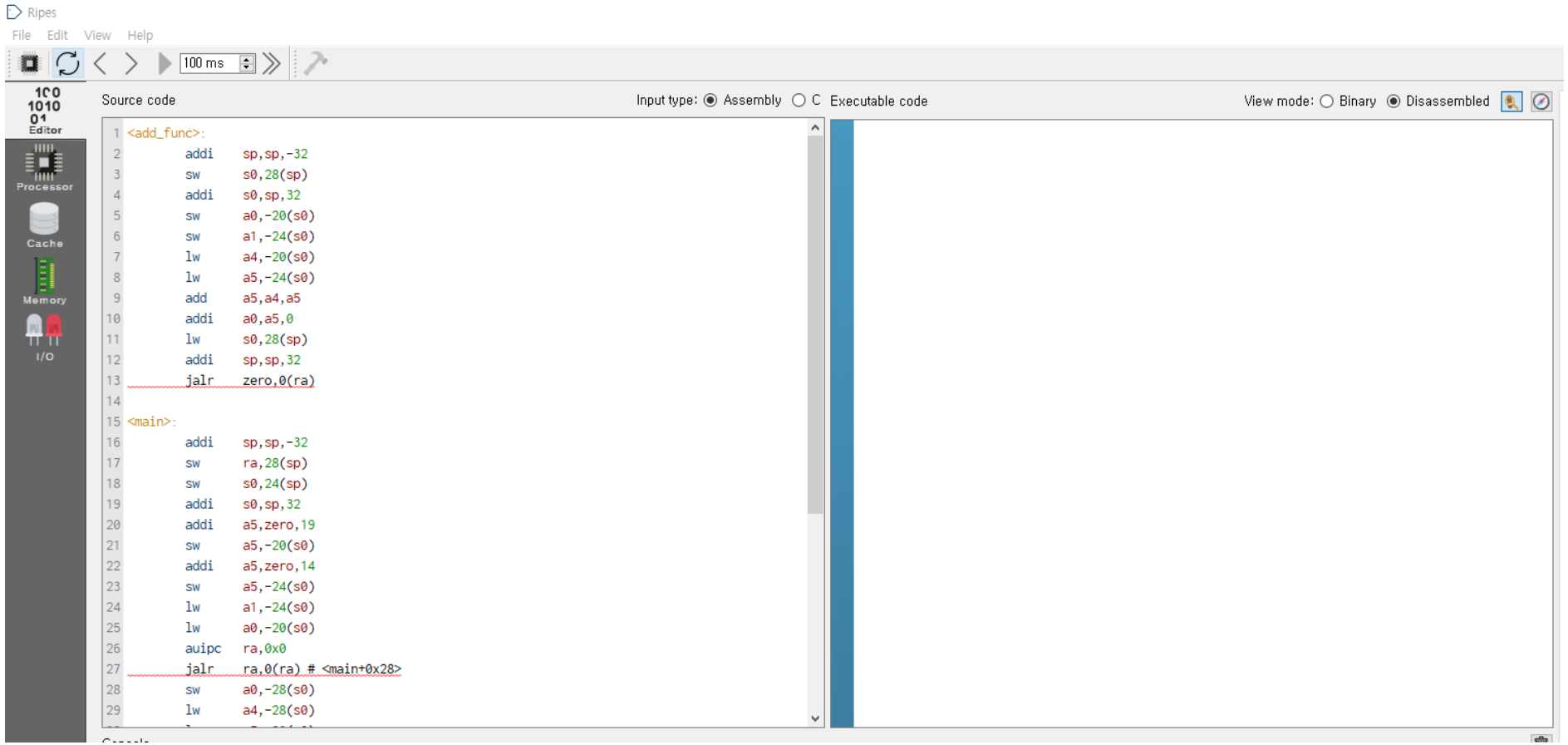

Assembly post-processing in Ripes

2. Move the <main> function to the top (because default PC is 0x0 in Ripes)

```
<add_func>:
        addi    sp,sp,-32
        sw      s0,28(sp)
        addi    s0,sp,32
        sw      a0,-20(s0)
        sw      a1,-24(s0)
        lw      a4,-20(s0)
        lw      a5,-24(s0)
        add     a5,a4,a5
        addi    a0,a5,0
        lw      s0,28(sp)
        addi    sp,sp,32
        jalr    zero,0(ra)
<main>:
        addi    sp,sp,-32
        sw      ra,28(sp)
        sw      s0,24(sp)
        addi    s0,sp,32
        addi    a5,zero,19
        sw      a5,-20(s0)
        addi    a5,zero,14
        sw      a5,-24(s0)
        lw      a1,-24(s0)
        lw      a0,-20(s0)
        auipc   ra,0x0
        jalr    ra,0(ra) # <main+0x28>
        sw      a0,-28(s0)
        lw      a5,-28(s0)
        slli    a5,a5,0x2
        sw      a5,-32(s0)
        addi    zero,zero,0
        lw      ra,28(sp)
        lw      s0,24(sp)
```

```
<main>:
        addi    sp,sp,-32
        sw      ra,28(sp)
        sw      s0,24(sp)
        addi    s0,sp,32
        addi    a5,zero,19
        sw      a5,-20(s0)
        addi    a5,zero,14
        sw      a5,-24(s0)
        lw      a1,-24(s0)
        lw      a0,-20(s0)
        auipc   ra,0x0
        jalr    ra,0(ra) # <main+0x28>
        sw      a0,-28(s0)
        lw      a5,-28(s0)
        slli    a5,a5,0x2
        sw      a5,-32(s0)
        addi    zero,zero,0
        lw      ra,28(sp)
        lw      s0,24(sp)
        addi    sp,sp,32
        jalr    zero,0(ra)
<add_func>:
        addi    sp,sp,-32
        sw      s0,28(sp)
        addi    s0,sp,32
        sw      a0,-20(s0)
        sw      a1,-24(s0)
        lw      a4,-20(s0)
        lw      a5,-24(s0)
        add     a5,a4,a5
        addi    a0,a5,0
        lw      s0,28(sp)
```

Assembly post-processing in Ripes

3. Replace ‘jalr zero, 0(ra)’ at the end of <main> with ‘li a7, 10’ & ‘ecall’ (exit inst.)

```
<main>:
        addi    sp,sp,-32
        sw      ra,28(sp)
        sw      s0,24(sp)
        addi    s0,sp,32
        addi    a5,zero,19
        sw      a5,-20(s0)
        addi    a5,zero,14
        sw      a5,-24(s0)
        lw      a1,-24(s0)
        lw      a0,-20(s0)
        auipc   ra,0x0
        jalr    ra,0(ra) # <main+0x28>
        sw      a0,-28(s0)
        lw      a4,-28(s0)
        lw      a5,-20(s0)
        add     a5,a4,a5
        sw      a5,-32(s0)
        addi    a5,zero,0
        addi    a0,a5,0
        lw      ra,28(sp)
        lw      s0,24(sp)
        addi    sp,sp,32
        jalr    zero,0(ra)
```

li a7, 10
ecall

```
<main>:
        addi    sp,sp,-32
        sw      ra,28(sp)
        sw      s0,24(sp)
        addi    s0,sp,32
        addi    a5,zero,19
        sw      a5,-20(s0)
        addi    a5,zero,14
        sw      a5,-24(s0)
        lw      a1,-24(s0)
        lw      a0,-20(s0)
        auipc   ra,0x0
        jalr    ra,0(ra) # <main+0x28>
        sw      a0,-28(s0)
        lw      a4,-28(s0)
        lw      a5,-20(s0)
        add     a5,a4,a5
        sw      a5,-32(s0)
        addi    a5,zero,0
        addi    a0,a5,0
        lw      ra,28(sp)
        lw      s0,24(sp)
        addi    sp,sp,32
        # Exit program
        li a7, 10
        ecall
```

Assembly post-processing in Ripes

4. For every function call, replace ‘auipc ra, 0x0’ & ‘jalr ra, 0(ra)’ with ‘jal ra, <add_func>’ (target function)

```
<main>:
        addi    sp,sp,-32
        sw      ra,28(sp)
        sw      s0,24(sp)
        addi    s0,sp,32
        addi    a5,zero,19
        sw      a5,-20(s0)
        addi    a5,zero,14
        sw      a5,-24(s0)
        lw      a1,-24(s0)
        lw      a0,-20(s0)
        auipc   ra,0x0
        jalr    ra,0(ra) # <main+0x28>
        sw      a0,-28(s0)
        lw      a4,-28(s0)
        lw      a5,-20(s0)
        add     a5,a4,a5
        sw      a5,-32(s0)
        addi    a5,zero,0
        addi    a0,a5,0
        lw      ra,28(sp)
        lw      s0,24(sp)
        addi    sp,sp,32
        # Exit program
        li a7, 10
        ecall
```

jal ra, <add_func>

Assembly post-processing in Ripes

5. For every function return, replace ‘jalr zero, 0(ra)’ with ‘jr ra’ (return)

```
<add_func>:
        addi    sp,sp,-32
        sw      s0,28(sp)
        addi    s0,sp,32
        sw      a0,-20(s0)
        sw      a1,-24(s0)
        lw      a4,-20(s0)
        lw      a5,-24(s0)
        add     a5,a4,a5
        addi    a0,a5,0
        lw      s0,28(sp)
        addi    sp,sp,32
        jalr    zero, 0(ra)
```

jr ra

Assembly post-processing in Ripes

6. Now you can simulate the source code in Ripes.

Source code — Input type: Assembly / C

```
<main>:
        addi    sp,sp,-32
        sw      ra,28(sp)
        sw      s0,24(sp)
        addi    s0,sp,32
        addi    a5,zero,19
        sw      a5,-20(s0)
        addi    a5,zero,14
        sw      a5,-24(s0)
        lw      a1,-24(s0)
        lw      a0,-20(s0)
        jal     ra,<add_func>
        sw      a0,-28(s0)
        lw      a4,-28(s0)
        lw      a5,-20(s0)
        add     a5,a4,a5
        sw      a5,-32(s0)
        addi    a5,zero,0
        addi    a0,a5,0
        lw      ra,28(sp)
        lw      s0,24(sp)
        addi    sp,sp,32
        # Exit program
        li a7, 10
        ecall
<add_func>:
        addi    sp,sp,-32
        sw      s0,28(sp)
        addi    s0,sp,32
```

Executable code — View mode: Binary / Disassembled

```
00000000 <<main>>:
    0:      fe010113      addi x2 x2 -32
    4:      00112e23      sw x1 28 x2
    8:      00812c23      sw x8 24 x2
    c:      02010413      addi x8 x2 32
    10:      01300793      addi x15 x0 19
    14:      fef42623      sw x15 -20 x8
    18:      00e00793      addi x15 x0 14
    1c:      fef42423      sw x15 -24 x8
    20:      fe842583      lw x11 -24 x8
    24:      fec42503      lw x10 -20 x8
    28:      034000ef      jal x1 52 <<add_func>>
    2c:      fea42223      sw x10 -28 x8
    30:      fe442703      lw x14 -28 x8
    34:      fec42783      lw x15 -20 x8
    38:      00f707b3      add x15 x14 x15
    3c:      fef42023      sw x15 -32 x8
    40:      00000793      addi x15 x0 0
    44:      00078513      addi x10 x15 0
    48:      01c12083      lw x1 28 x2
    4c:      01812403      lw x8 24 x2
    50:      02010113      addi x2 x2 32
    54:      00a00893      addi x17 x0 10
    58:      00000073      ecall

0000005c <<add_func>>:
    5c:      fe010113      addi x2 x2 -32
    60:      00812e23      sw x8 28 x2
```

Running the machine code with testbench

7. Use parser.sh in Docker to extract HEX instruction code from Ripes disassembled instruction code

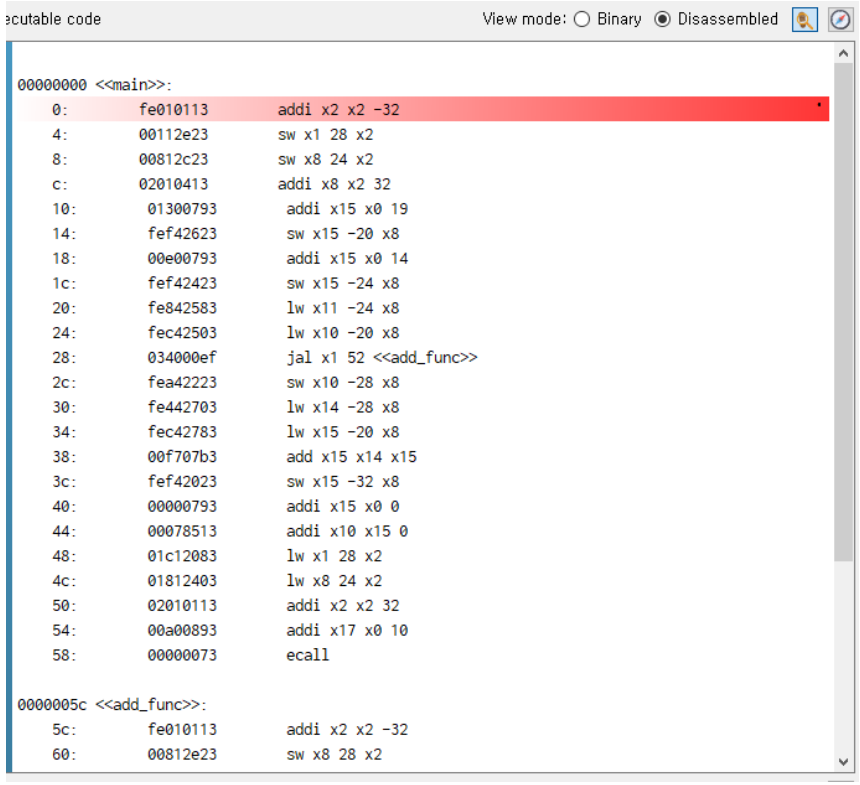


```
awk '$2 ~ /[0-9a-f]{8}/{print $2}' ${FILE}
```

```
fe010113
00112e23
00812c23
02010413
01300793
fef42623
00e00793
fef42423
fe842583
fec42503
034000ef
fea42223
fe442703
fec42783
...
```

Initialize instruction memory

The number of instructions < MEM_DEPTH

```
fe010113
00812e23
02010413
00300793
fef42623
00200793
fef42423
fec42703
fe842783
02f707b3
fef42223
00000793
00078513
01c12403
02010113
00000073
```

```
always @(posedge clk) begin
  // Initialize instruction memory
  if (reset) begin
    for (i = 0; i < MEM_DEPTH; i = i + 1)
        mem[i] = 32'b0;
    // Provide path of the file including instructions with binary format
    $readmemh("                    ", mem);
    //for (i = 0; i < 50; i = i + 1)
      //$display("mem[%d] = %h \n", i, mem[i]);
  end
end
```

Module ‘InstMemory’ in Memory.v

/path/to/binary_format/file