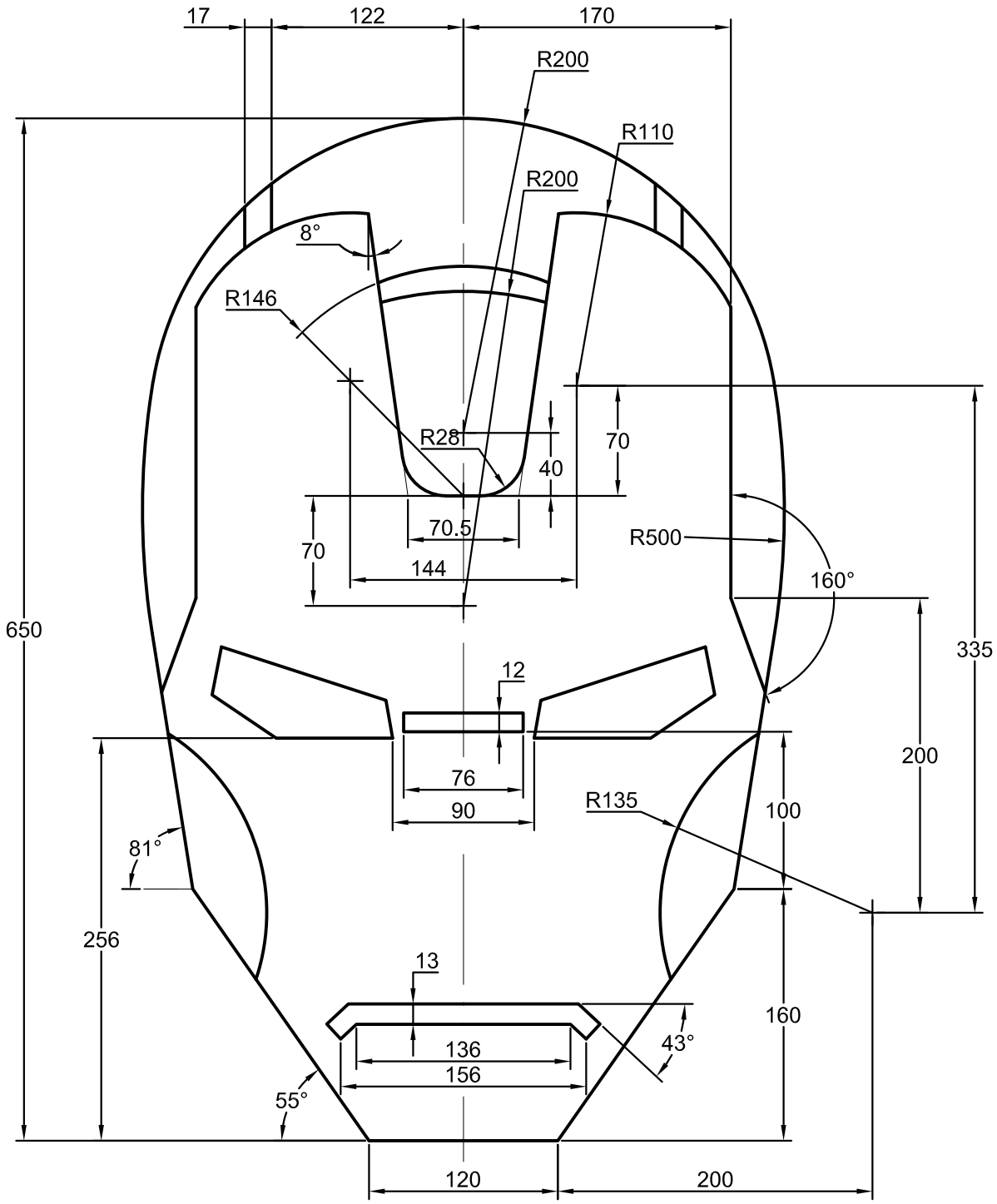

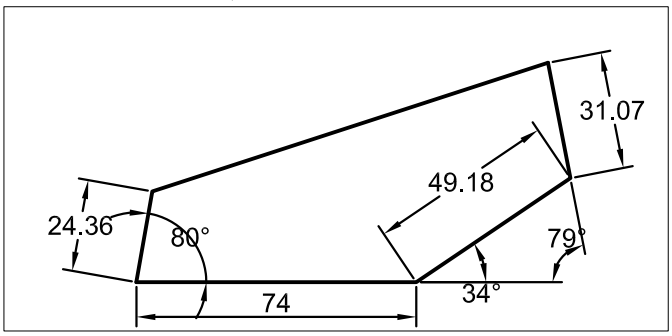

DETAIL FOR EYE
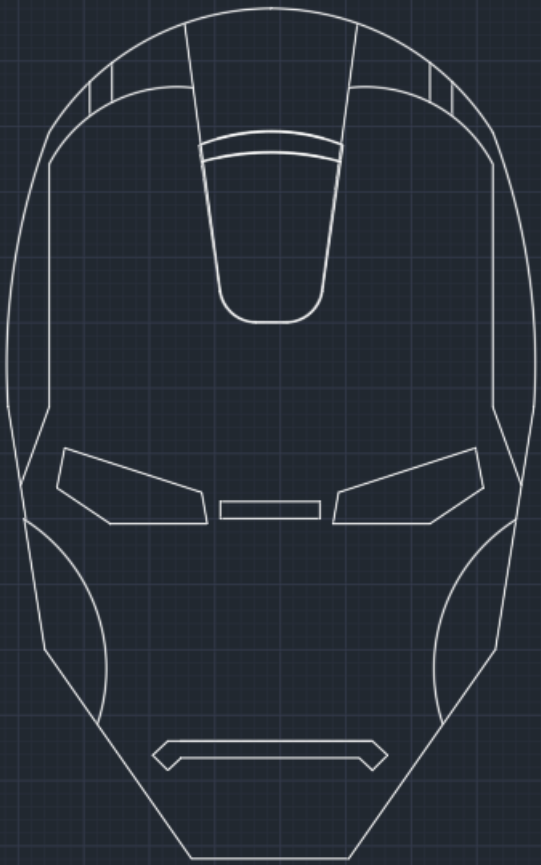
DWG NAME	PRACTICE EXERCISE04	
ASS05	METRIC	SCALE- 1:4
COURSE	ENGINEERING GRAPHICS