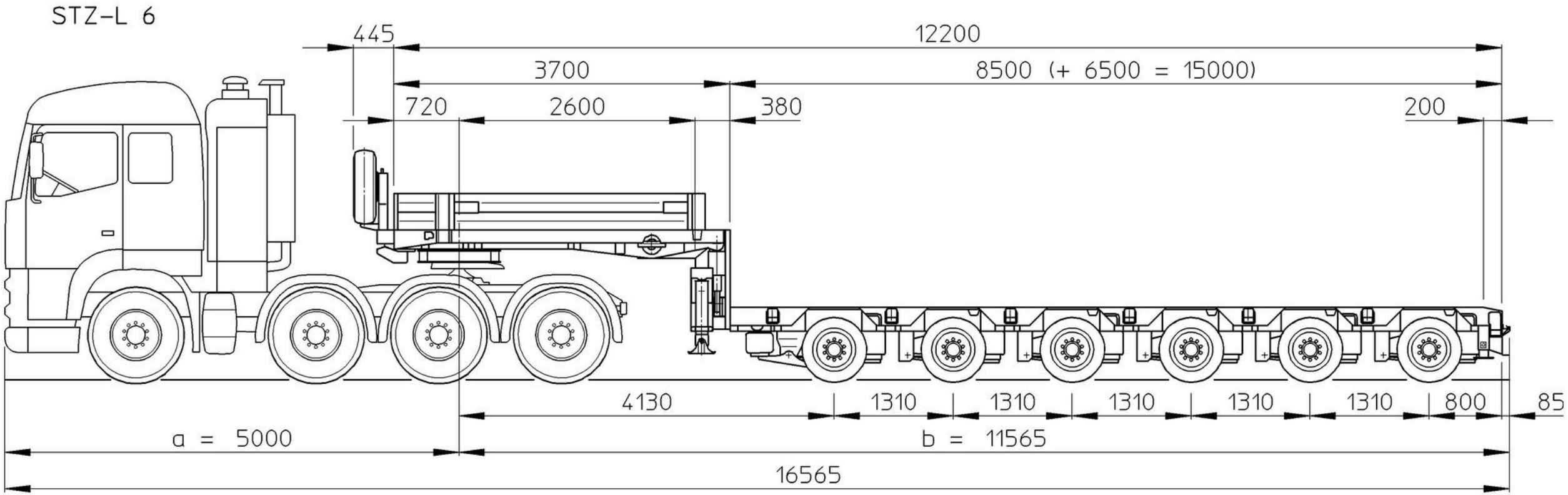4+6 AXLE SEMI-LOW LOADER