Vehicle assembly (516893)

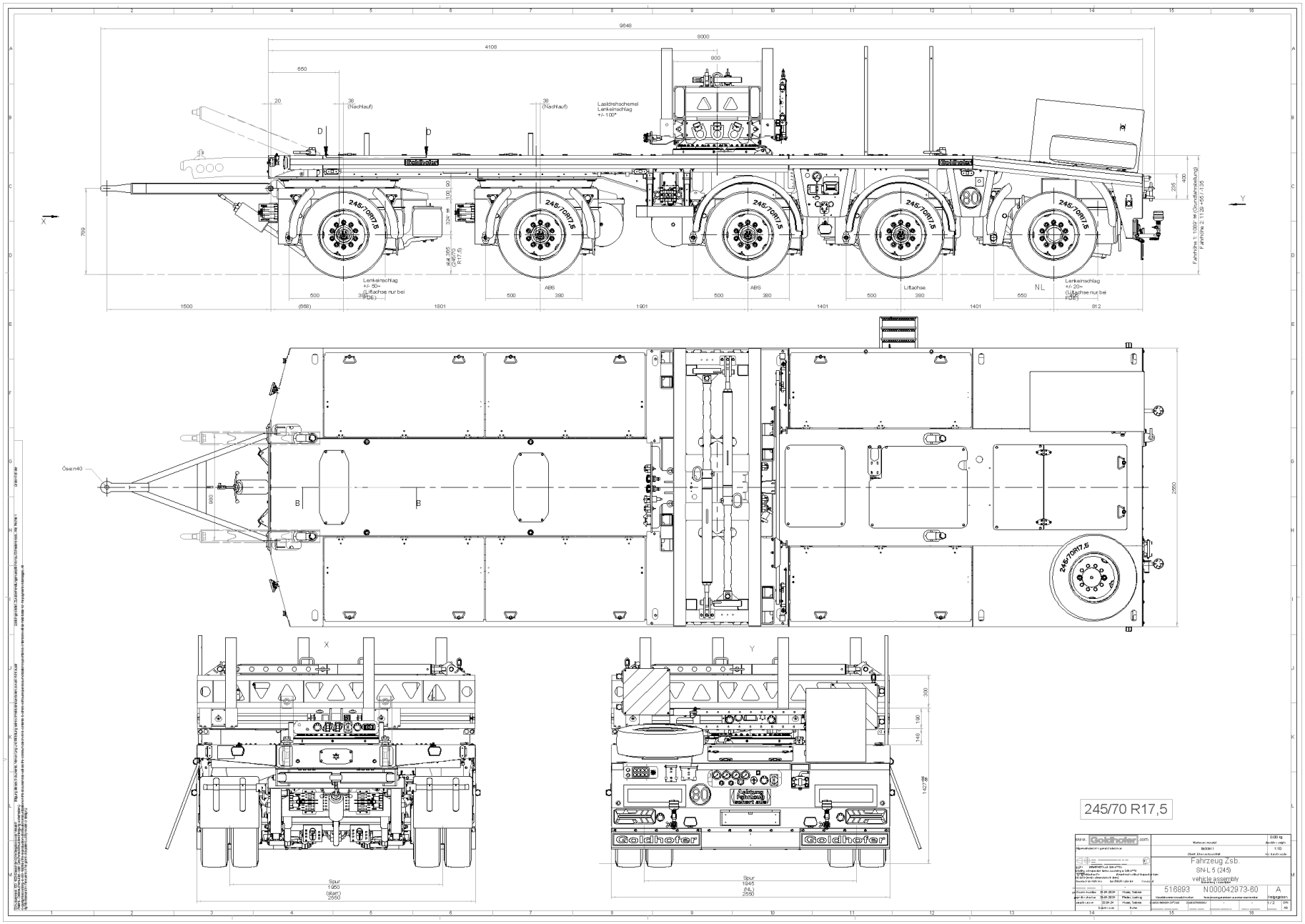

Vehicle assembly (516893)

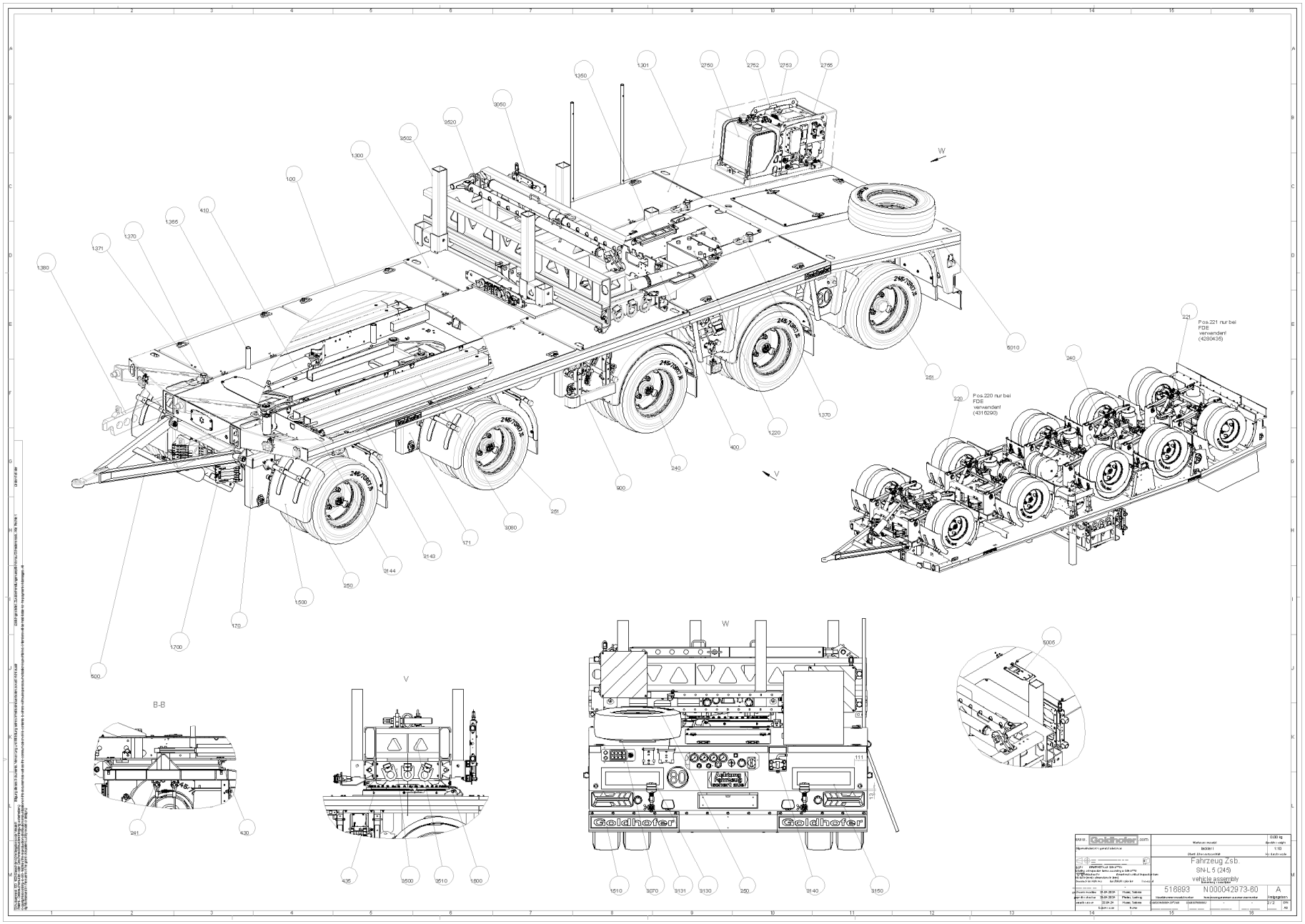

Vehicle assembly (516893)

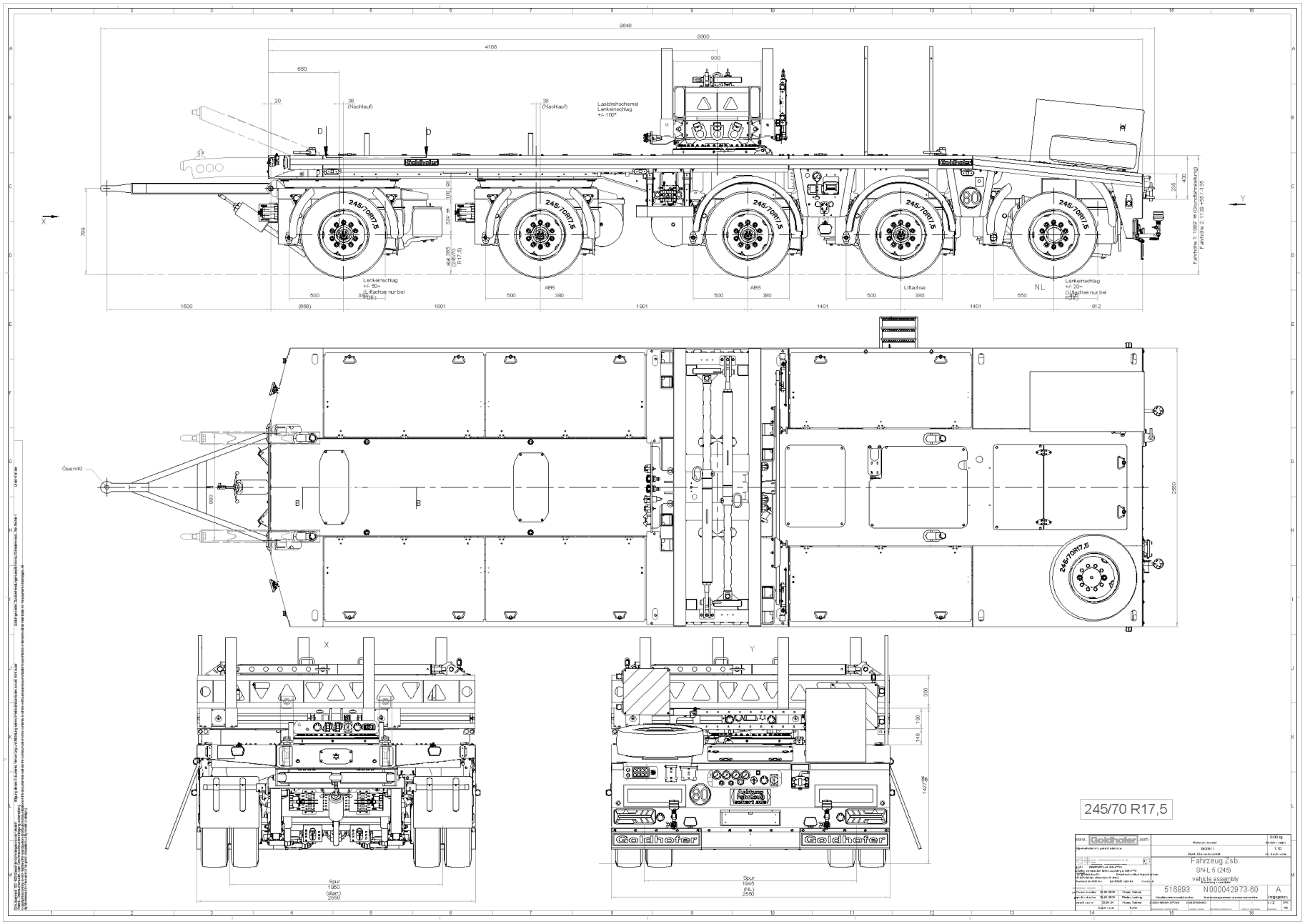
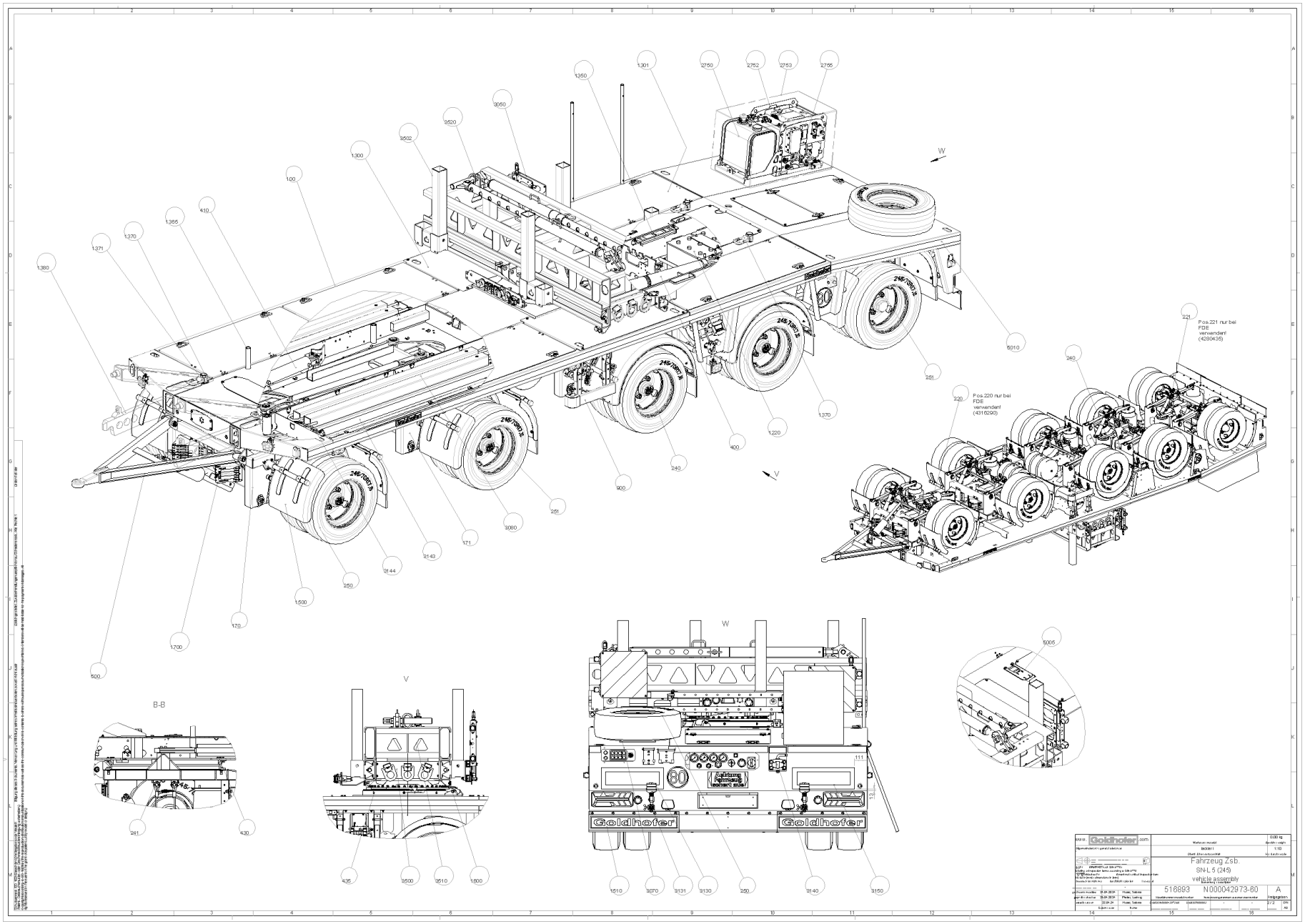
Vehicle assembly (516893)