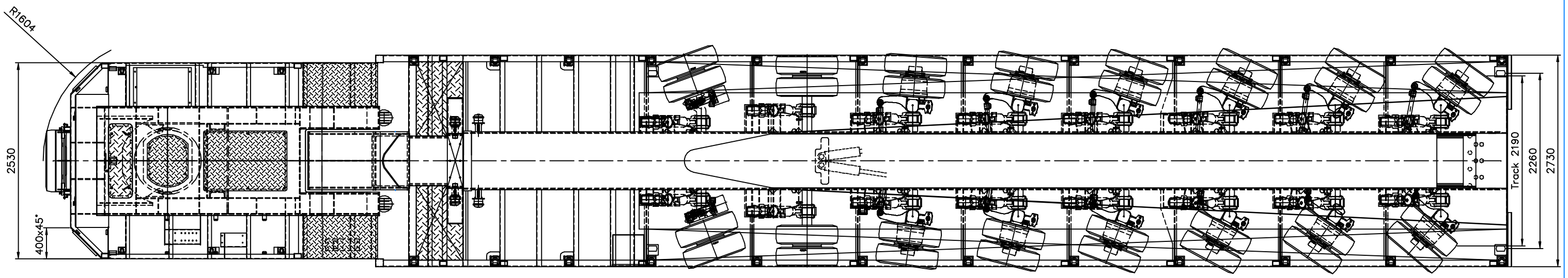

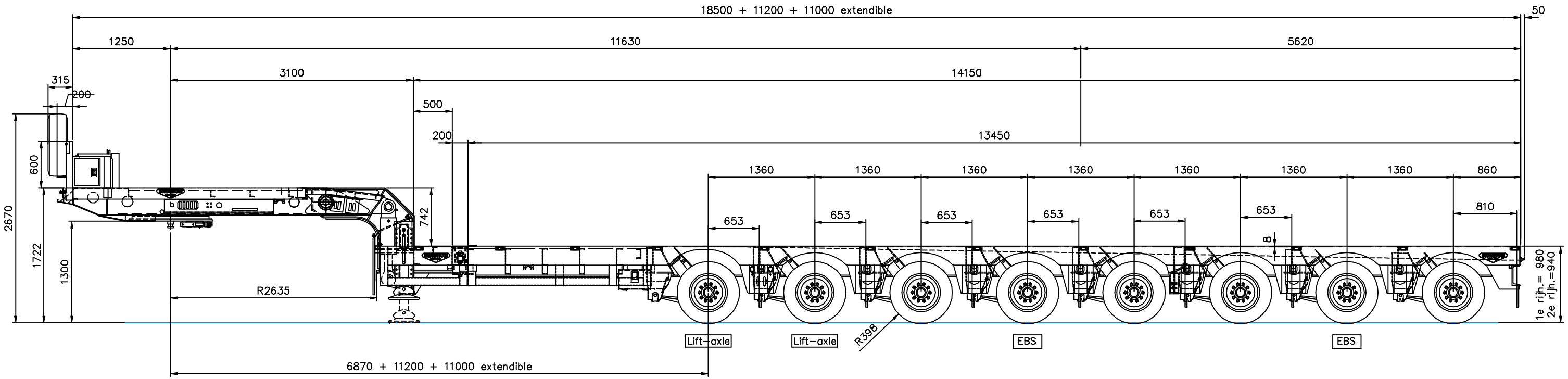

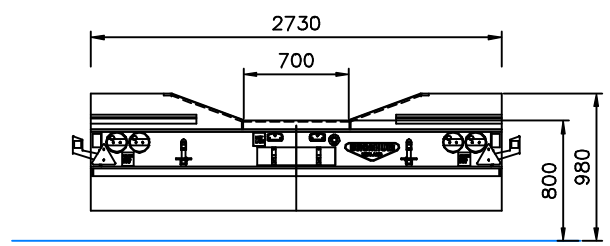

Inner beam	Centre beam	Chassis	H-18356	Suspension	Weweler P-10768	Drawing bogie	P-10738 - P-10745
Extensions	Extensions	Inner beam	K-19893	Axles	BPW NMZMLL, NHZMH, NMZML 12010 ECO	Side rave	(F) KGW-140 closed, (R) UNP 240 closed
1000	500	1st Center beam	---	Raise/lower	+ 120 / -100	Stake pockets	96x66x6 2x 11 pcs.
2000	till	2nd Center beam	K-19892	Tyres	245/70 R17,5 XTE2	Deck	35mm Hardwood 8/10mm Checker plate
3000	11000	Outer beam	H-18355	Fifth wheel load	25.000 kg (techn. 30.000)	Weldings	K-13320
4000	in	Special beam	---	Bogie load	80.000 kg (techn. 96.000)	Drain holes	ø13
5000	steps	Neck	H-17138	Landing gear	Jost Modul CH	Type vehicle	8ABSD-105/2
6000	of			Client	SCHWANDNER GmbH	Chassis number	XNJ87C5AB12H01029
7000	500						
8000							
9000							
10000							
11200							

COPYRIGHT BROSHUIS B.V.

BROSHUIS HOLLAND
BROSHUIS B.V. SPECIAL TRAILERS
INDUSTRIEWEG 22 8263 AD KAMPEN
POSTBUS 468 8260 AL KAMPEN
TELEFOON +31(0)38 3372800
TELEFAX +31(0)38 3372888
E-MAIL sales@broshuis.com

Specification modification			
Drawn	H.R.	Dimensions in mm	
Date	17-11-11	Scale	1:25
Order.no.	1201029	Format	A1
Preceeded	1101006	Tolerances	ISO 2768-cL

Projection

8 AXLE DOUBLE EXTENDIBLE SEMI LOW LOADER

Drawing no. 1201029 Checked