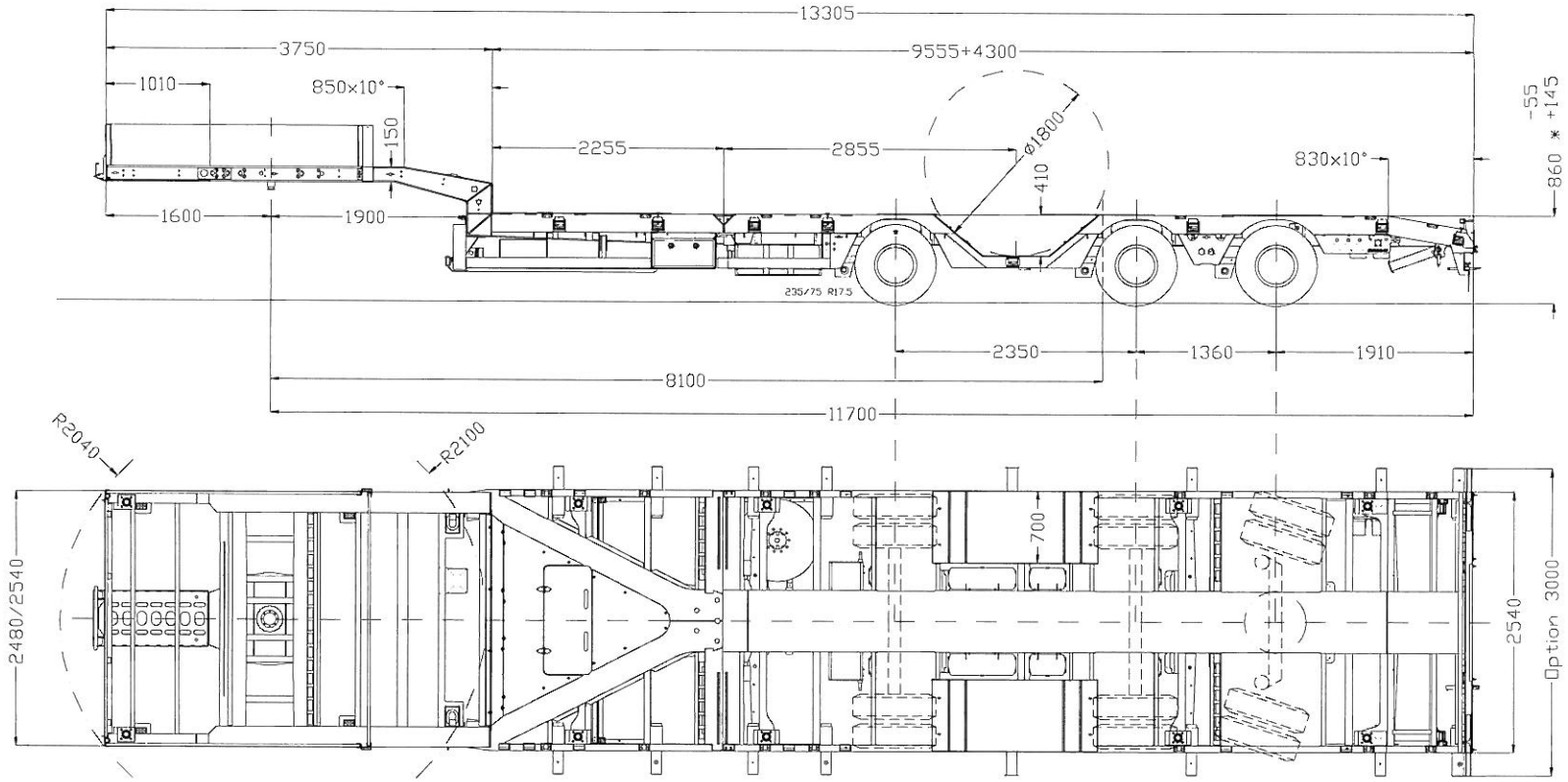

* : beladen/en charge/loaden

P. Schwandner Logistik+Transport Ch-6751-6754

54736			Euro-N-3L-A
gez.	16.10.06	Josten	18AT-9.55-17.5-2.54 (Basic)
gepr.			

FAYMONVILLE SPECIAL TRAILERS

Schwarzenbach 12
B-4760 BÜLLINGEN
Tel.: ++32/80/640 155
Fax: ++32/80/640 151

Multimax