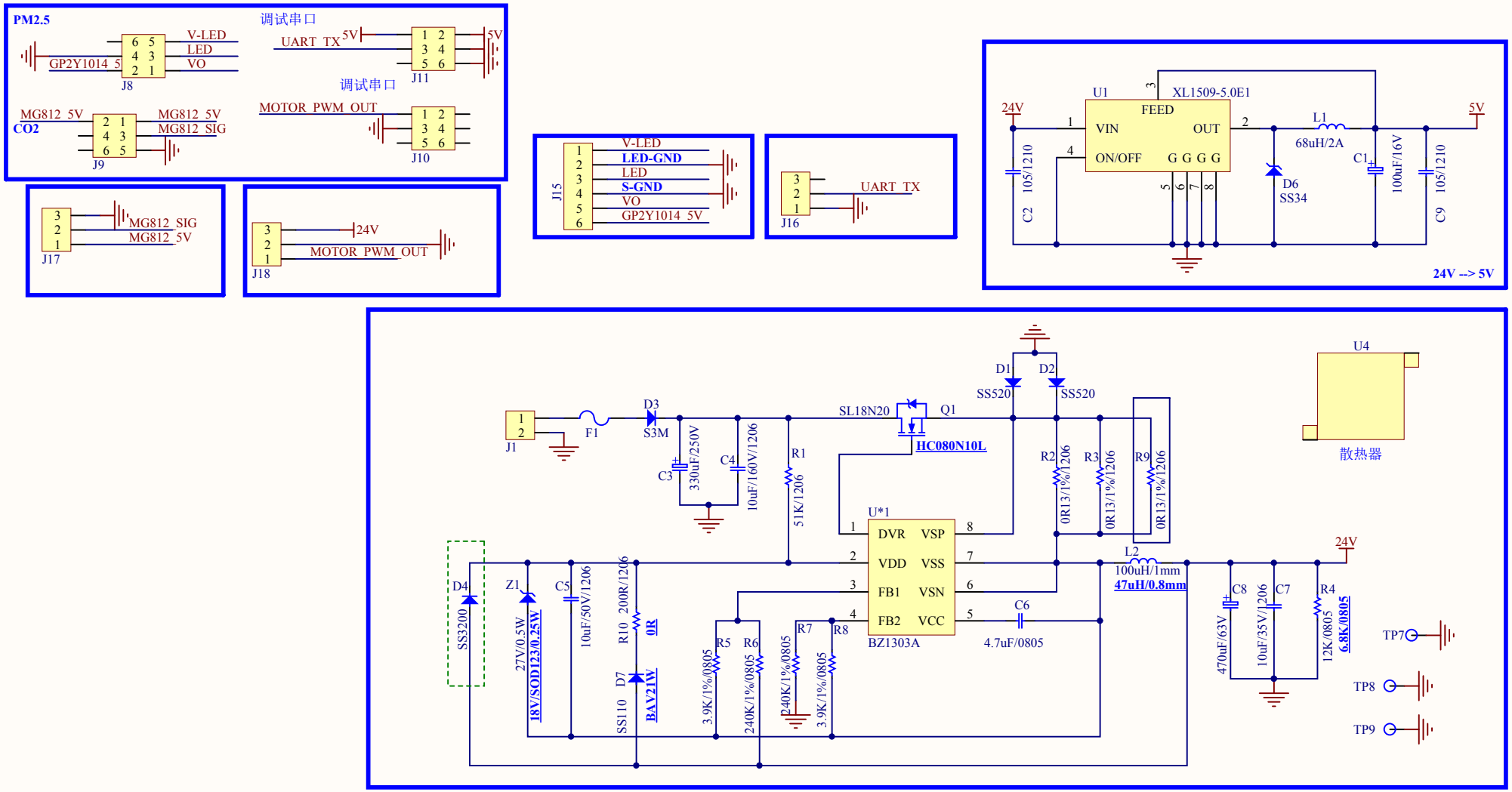

Title	PowerSystem-V3.0	
Size A4	Number	Revision
Date: 2019/3/12		Sheet of
File: D:\NOW\..\power.SchDoc		Drawn By:

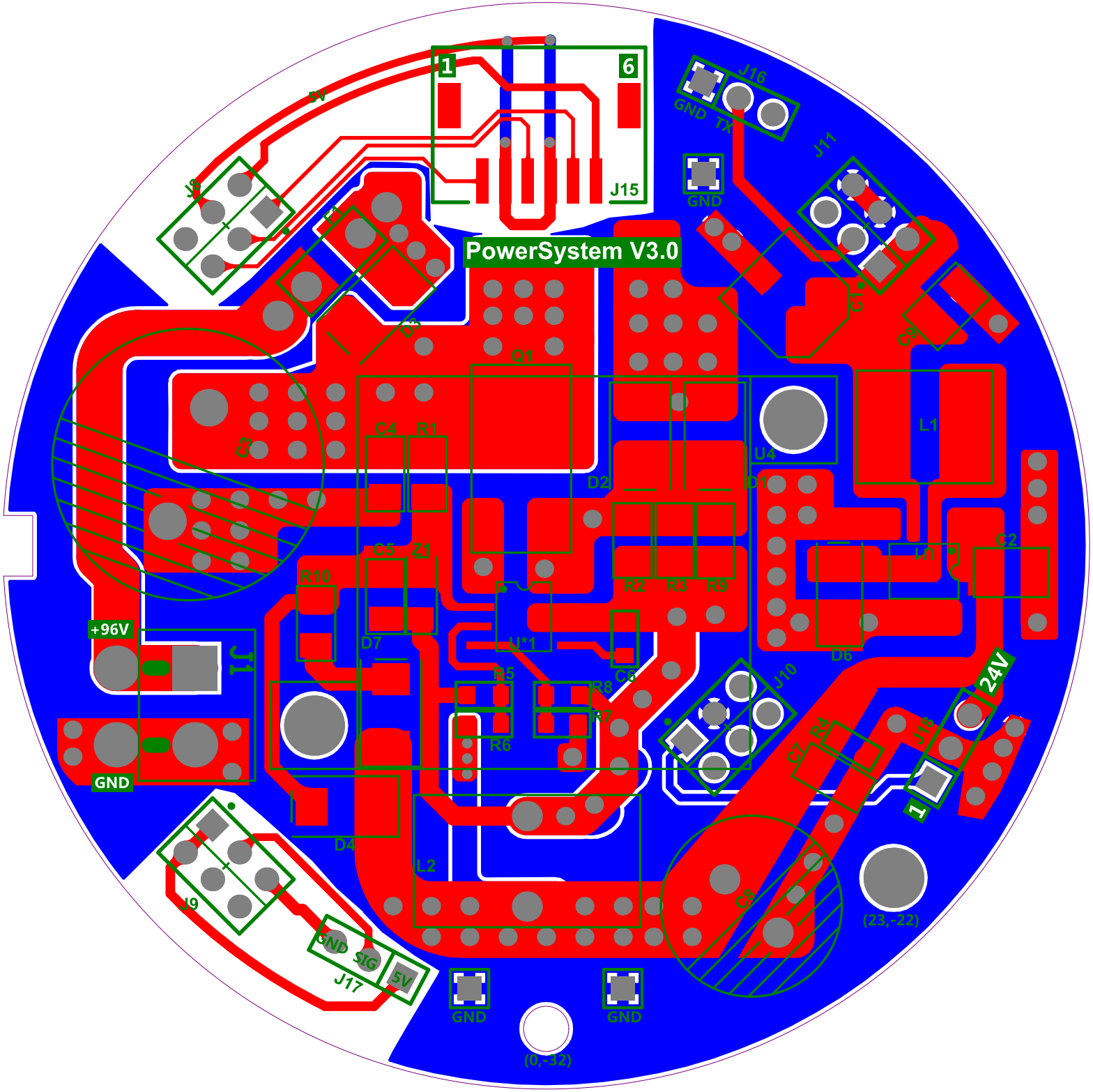
PowerSystem V3.0
1
6
J15
5V
J8
J16
GND
TX
J11
GND
C10
C9
D3
Q1
C4
R1
U4
L1
D2
D1
C5
Z1
R10
R2
R3
R9
C2
+96V
J1
D7
U*1
R5
R8
C6
D6
J13
24V
R4
C7
J14
R6
R7
GND
1
D4
L2
C8
(23,-22)
J9
GND
SIG
5V
J17
GND
GND
(0,-32)