Lecture 20: Post-Silicon Testing

ECE 9433: Agile System-on-Chip Design

Fall 2024

Prof. Austin Rovinski

New York University

Your Chips are Done! Now What?

- First, your chips will be sent for packaging
  - Sometimes by the fab, sometimes by third-party
- Next, your boards will need to be assembled
  - Almost always done by a third-party
  - Boards will need to be fabricated too
  - Components will need to be placed on chip and soldered
  - **OSAT**: OutSourced Assembly and Test
  - Sometimes assembly is done in-house too
- Assembled boards sent back to you!

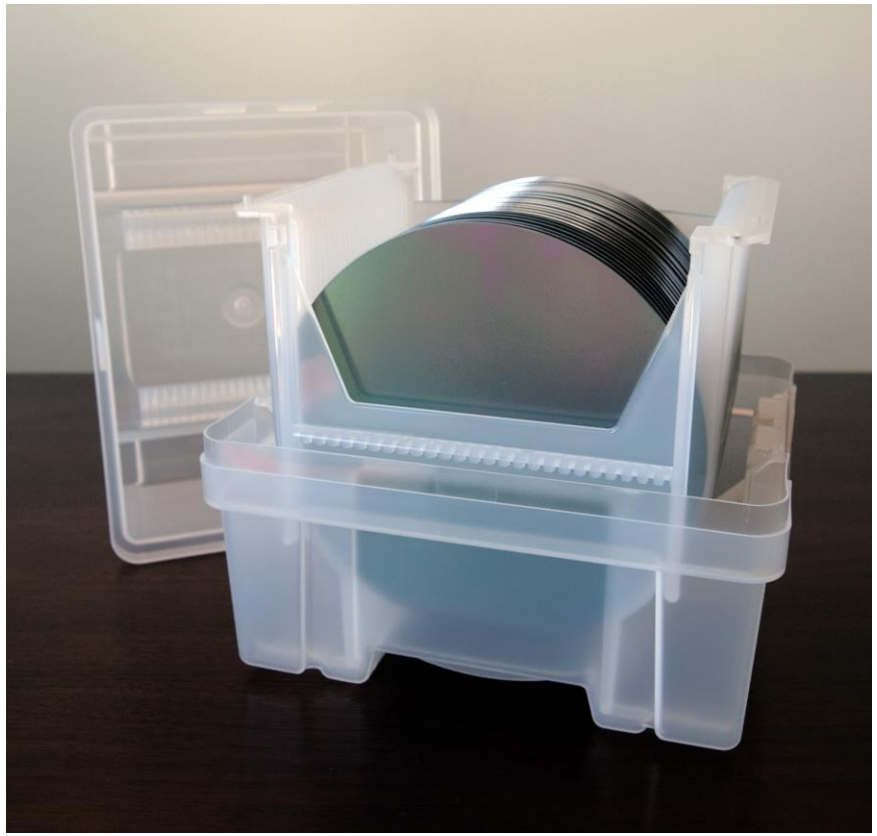

Typical Lab Setup

- DC power supply with enough outputs (at least 1 for I/O and core)
- Clock generator (function generator, but only square waves)
  - Supplying 1 clock is easy, 2 is fine (synch between generators), 3+ is hard
  - Should generate additional clocks from the same reference clock (PLL, etc.)
- Laptop for running software and test benches
- Laptop to chip adapter (whatever interface your chip uses)

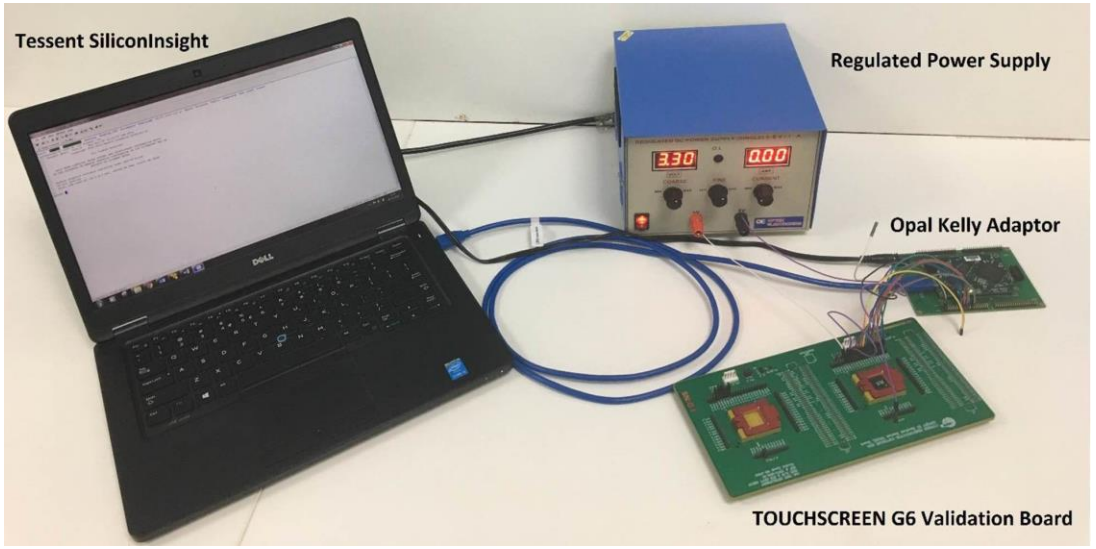

Chip Bringup

- Think back to lab experiments where you needed to document a step-by-step procedure for your experiment (before even getting in lab!)
- Create a series of tests that should run on your test chip
- Ideally, simulation tests will be a direct translation to real chip tests
- Good tests must pass when correct, *fail when incorrect*

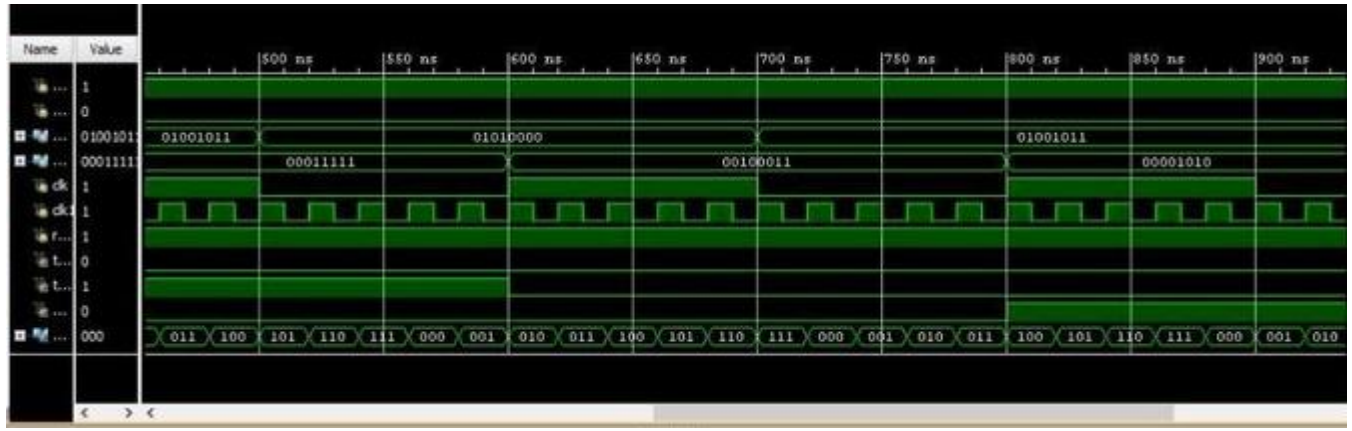

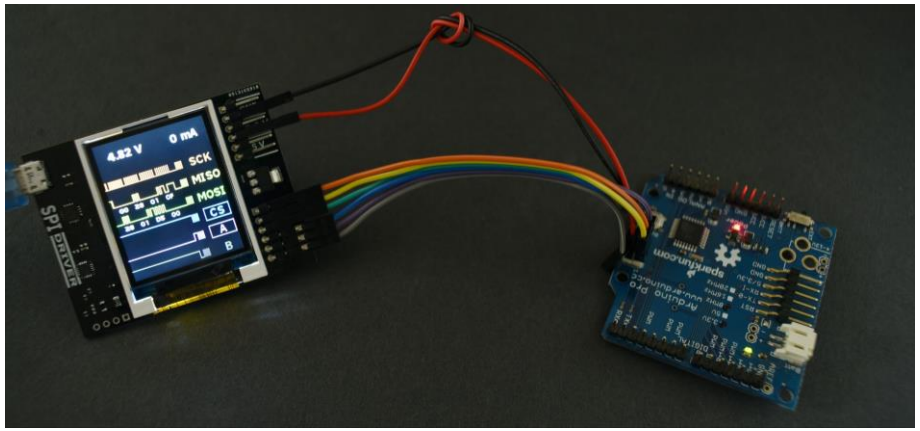

Debugging

- Your test doesn’t work. What now?
- Unlike RTL simulations, you can’t view internal chip signals
- If your test is too granular, so too will be the debugging information
- Fine-grain tests are *critical* for validating individual components work
- Case 1: Your chip can’t do a full matrix multiply. No data is returned
- Case 2: Your chip can do an individual multiplication and a dot product, but the matrix multiply doesn’t work.

Debugging Interfaces

- *The simpler something is, the harder it is to mess up*
- Add simple interfaces off-chip to enable testing outside of normal operating mode
- Normal operating mode: PCIe, DDR, etc.
- Debugging mode: SPI, I2C, etc.

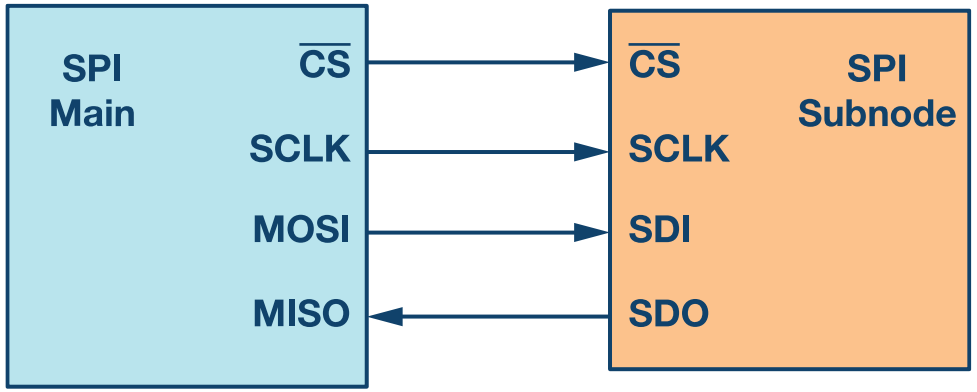

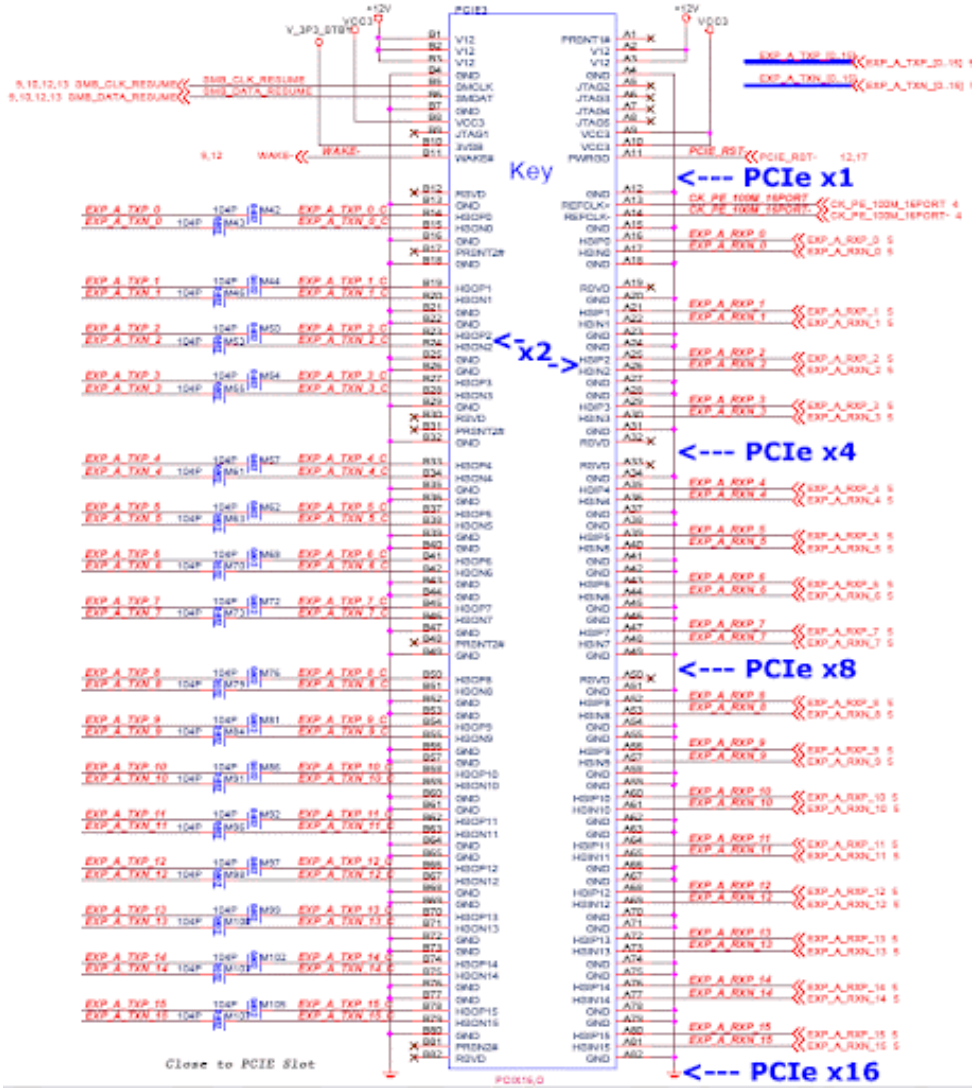

Scan Chain Insertion

- For massively complex systems, can be impossible to test and debug problems with only the designed interfaces
- Solution: insert additional hardware into the design for debugging
- **Scan chains** offer a separate path from designed circuit just to test paths register-by-register

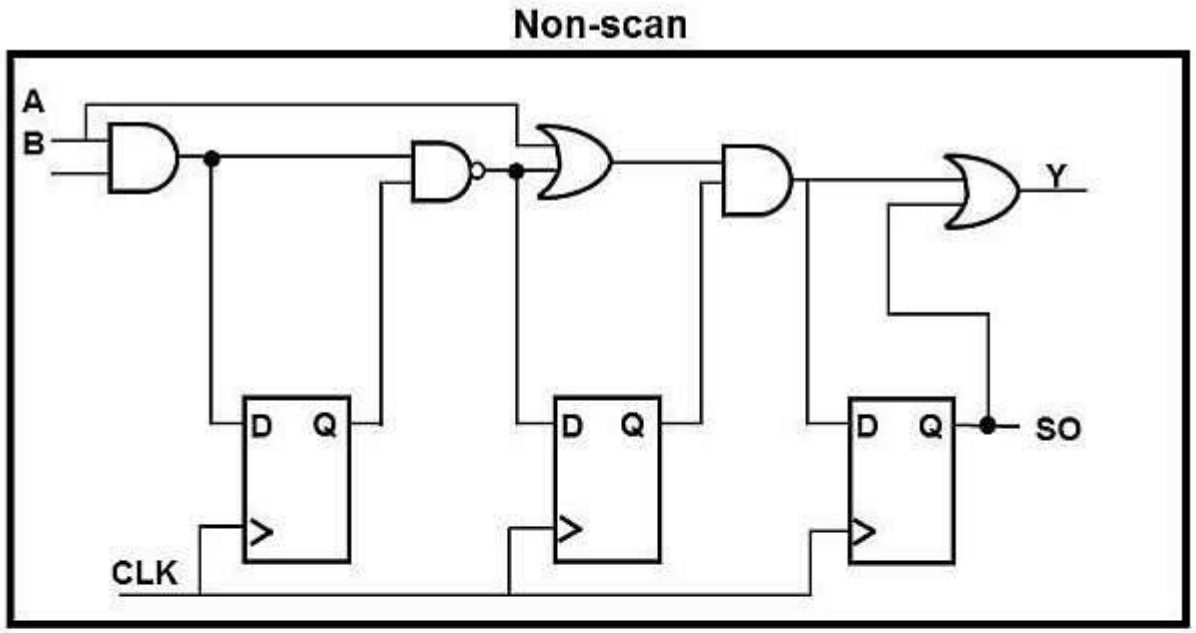

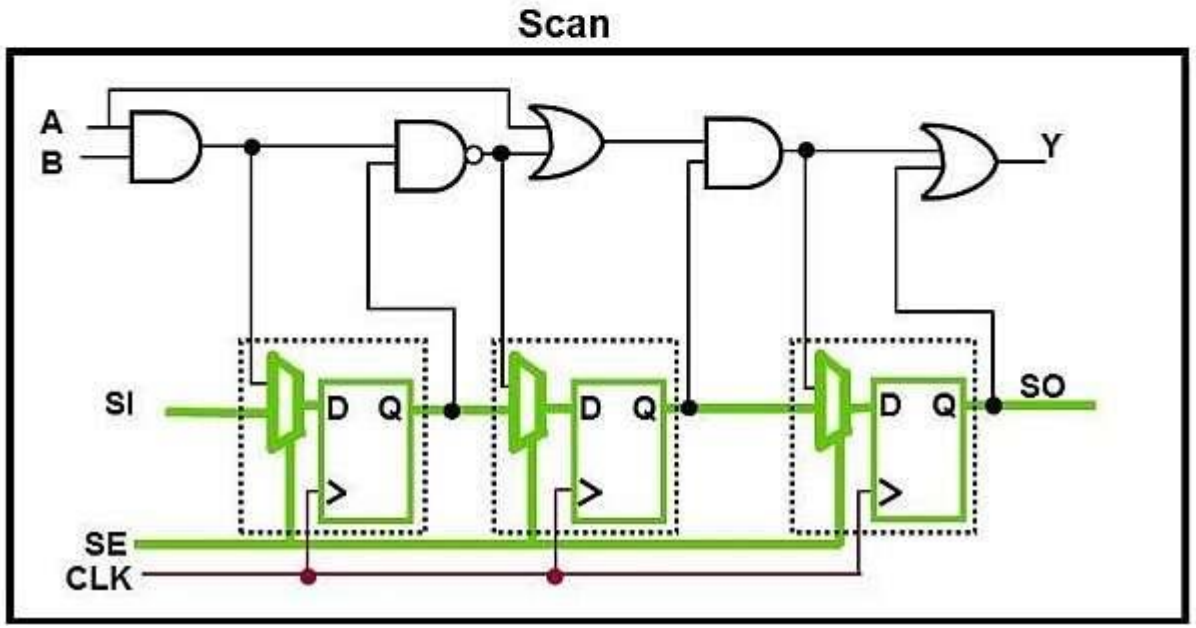

Design For Test (DFT)

- **DFT** is a standard term referring to:
  - Automatic replacement of FFs with scan FFs
  - Connecting scan FFs together into one or more chains
  - Inserting a (typically) 3-pin interface for the scan (Scan-in, Scan-out, Scan-Clk)
- DFT scan chains may go off chip, or may connect to a control unit which connects off-chip
- Longer scan chains = longer test time
- It often makes sense to break scan chains into smaller chunks

DFT Fault Modeling

- **Stuck-at Faults**: a transistor does not work, causing it to be always on or off
- **At-Speed Faults**: a transistor has an excessive slew for certain transitions

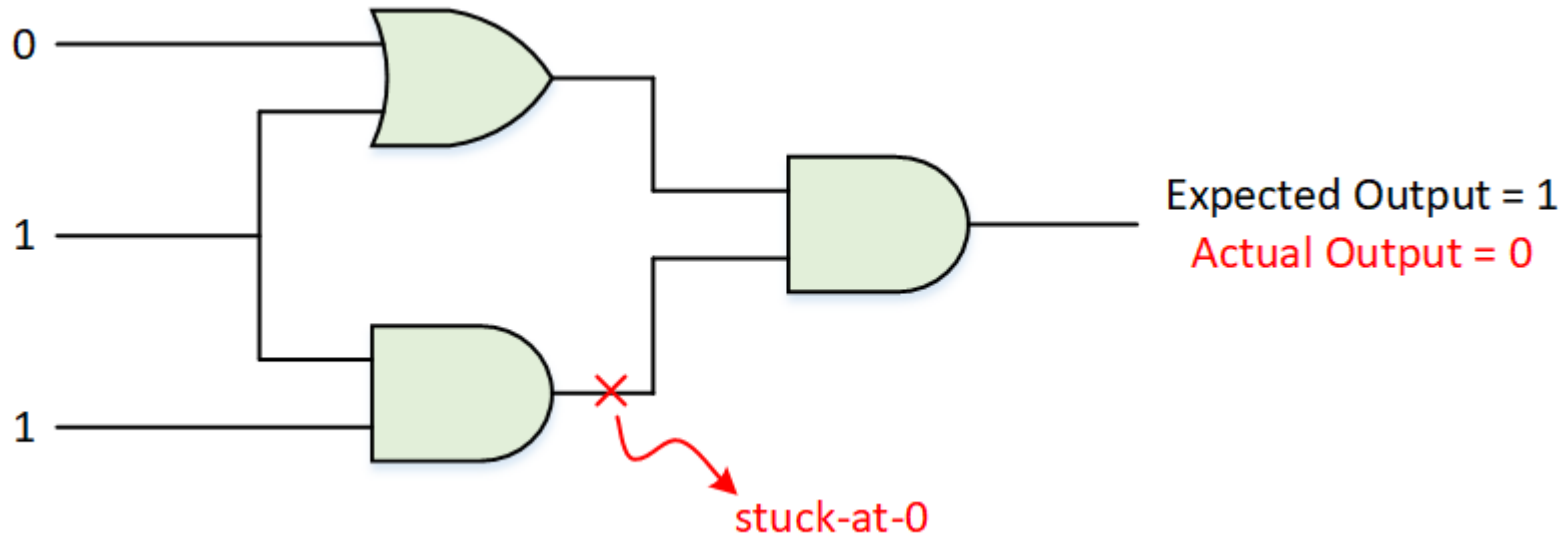

Automatic Test Pattern Generation (ATPG)

- Creating a test vector for *every single path* **and** ensuring it tests *all* failure modes is basically impossible to do manually
- **ATPG**: reverse engineer the logic in each path and create a sequence of vectors which will check every failure mode

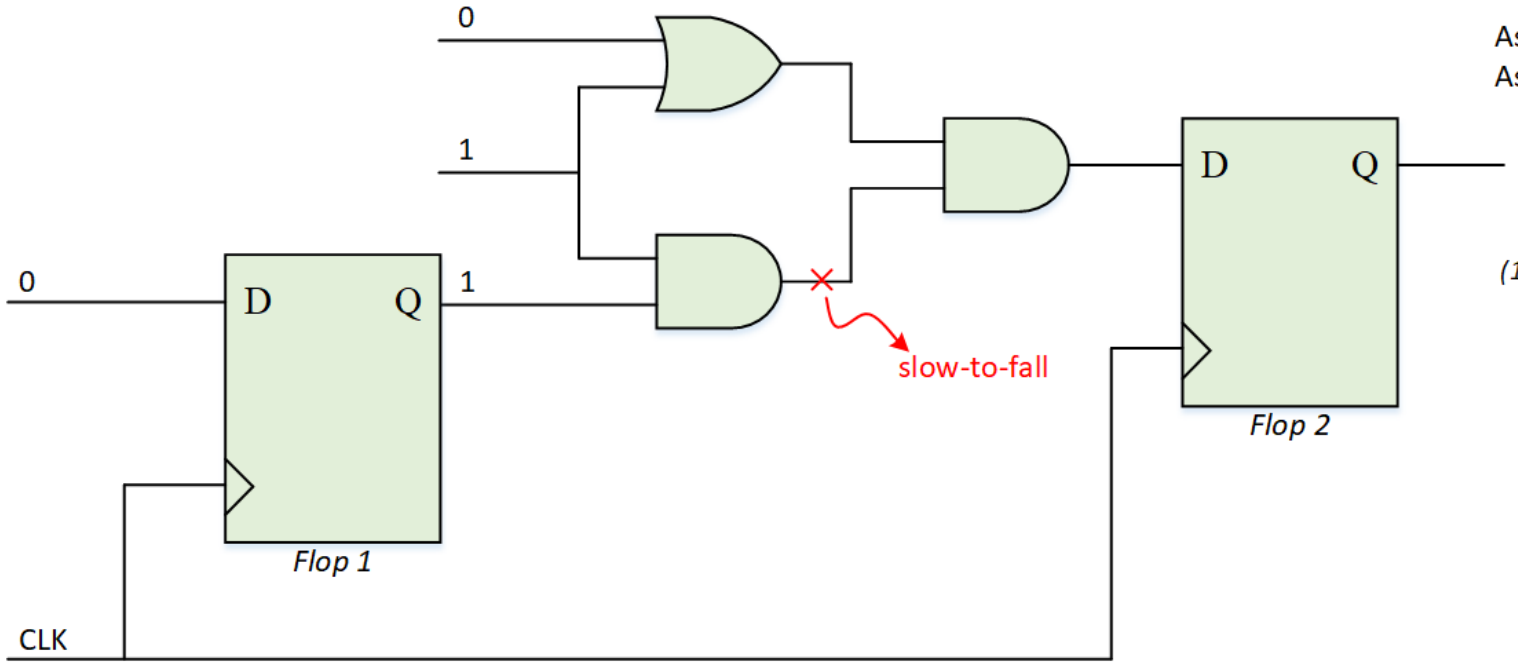

Assume Initial Value stored in Flop 1 = 1
Assume Initial Value stored in Flop 2 = 1

After 1st clock pulse (Launch edge)

Captured Value in Flop 1 = 0
(1-to-0 transition occurs at the output of shown AND gate because of this)
Captured Value in Flop 2 = 1

After 2nd clock pulse (Capture edge)

Expected Captured Value in Flop 2 = 0
Actual Captured Value in Flop 2 = 1

Factory Testing

- Boards and packages cost money
- Why package and assemble a known buggy chip?
- Testing at the fab before packaging can find many defective chips and remove them before wasting resources on packaging and assembly

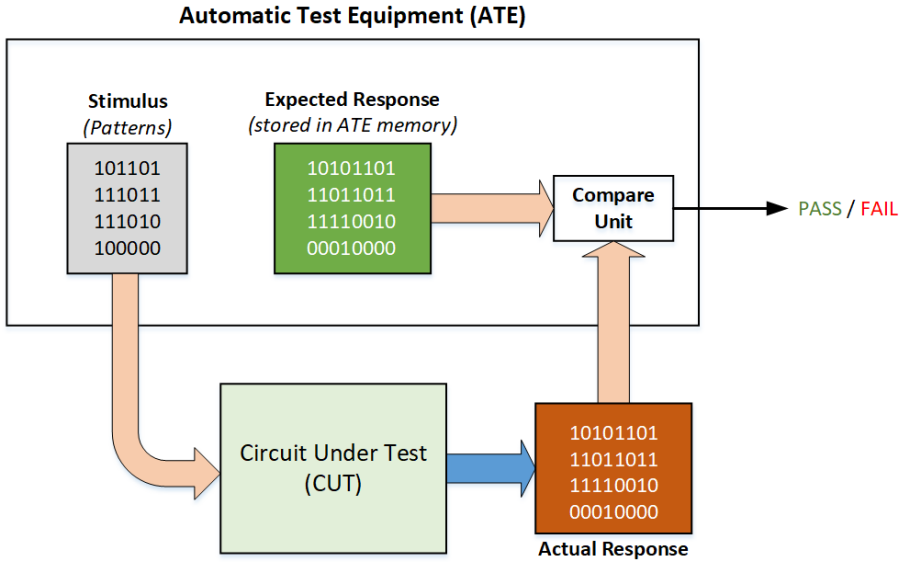

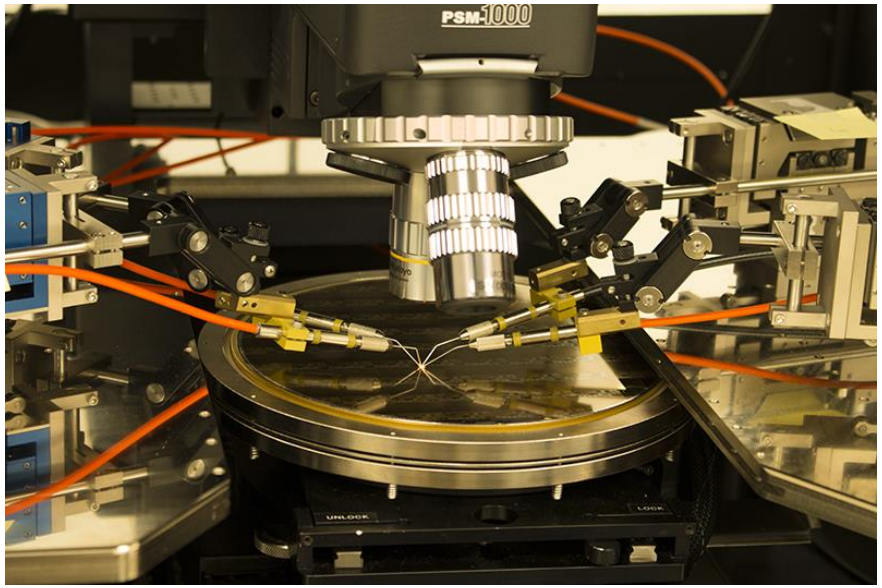

Prototype Testing

- DFT / ATPG is great for high-volume manufacturing, but can be too costly to implement for low-volume prototypes
- How much testing you should do is a function of how much you need the chips to work, and how much will it cost to test
  - Intel needs to sell you chips that work
  - A research prototype chip can easily be swapped if it doesn’t work

Acknowledgement