CDFL: Cross-Directional Feature Lattice for Brain Tumor Segmentation

Anonymous Author

Anonymous Organization,

ARTICLE INFO

Keywords:
brain tumor segmentation
boundary refinement
directional feature interaction
3D medical imaging
magnetic resonance imaging

ABSTRACT

Accurate segmentation of brain tumors in magnetic resonance imaging is essential for treatment planning but remains challenging due to low contrast and ambiguous boundaries between tumor and healthy tissue. These characteristics cause conventional convolutional networks to produce segmentation errors, including over-segmentation and imprecise edge localization. To address this, we propose the Cross-Directional Feature Lattice, a novel architectural module that refines boundary information simultaneously along orthogonal spatial axes. The module employs lightweight directional feature decomposition and cross-directional interaction to construct a boundary-aware feature lattice, enabling precise localization of ambiguous transition zones without computationally intensive explicit distance computation. Our approach fits seamlessly into standard encoder-decoder frameworks as a plug-in refinement component. Validated on a publicly available dataset of 50 multi-modality MRI scans of intracranial germinomas, the proposed method shows significant improvements in boundary definition and segmentation accuracy compared to baseline models. The code and checkpoints are available at https://github.com/yifangao112/CDFL-Net

1. Introduction

Accurate segmentation of intracranial germinomas from magnetic resonance imaging (MRI) is a critical prerequisite for effective treatment planning Mayeta-Revilla, Cavieres, Salinas, Mellado, Ponce, Moyano, Chabert, Querales, Sotelo, and Salas (2025). As the most common histological subtype of intracranial germ cell tumors, germinomas are highly sensitive to chemo-radiotherapy, and precise tumor definition is essential to avoid unnecessary neurosurgical procedures and to enable optimal radiotherapy targeting. This segmentation task, however, remains particularly challenging due to the characteristically low contrast and ambiguous, fuzzy boundaries between tumor tissue and adjacent healthy brain structures Zhang, Liu, and Hu (2021). The substantial intensity overlap in these transition zones leads to poor boundary definition, which in turn causes conventional convolutional neural networks (CNNs) to produce segmentation errors, including over-segmentation and imprecise edge localization Ronneberger, Fischer, and Brox (2015).

To address the challenge of boundary ambiguity, several methodologies have been proposed to enhance boundary awareness in medical image segmentation. Approaches based on explicit distance field estimation, such as learning signed distance functions, can provide precise boundary information but incur substantial computational expense, especially when processing 3D volumetric data Xue, Tang, Qiao, Gong, Yin, Qian, Huang, Fan, and Huang (2019). Alternative methods that apply uniform refinement across all boundary regions, often through multi-task learning with auxiliary boundary detection, frequently fail to account for local morphological variations inherent to complex tumor shapes Murugesan, Sarveswaran, Shankaranarayana, Ram, and Sivaprakasam (2019). A common shortfall among these techniques is the inability to simultaneously preserve high-resolution spatial information and capture the long-range dependencies necessary to distinguish subtle intensity transitions at tumor margins Milletarì, Navab, and Ahmadi (2016). While recent vision transformers and state-space models have shown promise in capturing global context, their computational complexity often limits their application to high-resolution 3D feature maps, and they may not explicitly model the structured, directional nature of boundary ambiguity Xu (2016).

ORCID(s):

To address these limitations, we propose the Cross-Directional Feature Lattice (CDFL), a novel architectural module designed for efficient and precise boundary refinement in 3D medical image segmentation. Our core insight is that constructing a feature lattice which refines boundary information simultaneously along orthogonal spatial axes can enable precise localization of ambiguous transition zones. This is achieved using lightweight directional decomposition and structured cross-directional interaction, eliminating the need for computationally intensive explicit distance computation or global token-wise self-attention. The proposed CDFL module operates as a plug-in refinement component within a standard encoder-decoder segmentation framework. It performs boundary refinement in two sequential stages: a Directional Decomposition Block that separates the 3D feature volume into distinct axial, coronal, and sagittal components, followed by a Cross-Directional Lattice Interaction block that establishes structured information exchange between these orthogonal feature sets.

We evaluate our method on a publicly available dataset of multi-modality MRI scans from patients with pathologically confirmed intracranial germinomas. Experimental results show that our approach achieves state-of-the-art performance, outperforming strong baselines including nnUNet, STUNet, and UMamba. Specifically, our method improves the Dice score by 2.12 percent and reduces the 95th percentile Hausdorff Distance (HD95) by 33.97 percent compared to the strongest baseline. Ablation studies confirm the contribution of each proposed component, and qualitative analysis shows our method produces more accurate boundaries with fewer false positives.

This work makes three main contributions. First, we introduce the Cross-Directional Feature Lattice (CDFL), a module that refines boundary features by constructing a lattice of interactions along orthogonal anatomical planes, enabling precise localization of ambiguous tumor margins. Second, we design a two-stage refinement process comprising a Directional Decomposition Block with a boundary-aware gating mechanism and a computationally efficient Cross-Directional Lattice Interaction block that models structured multi-planar relationships without global self-attention. Third, we show the effectiveness of our plug-in module within the nnUNet framework on a challenging germinoma segmentation task, achieving superior boundary accuracy and establishing a new state-of-the-art on the benchmark dataset.

2. Related Work

2.1. Medical Image Segmentation Architectures

The evolution of medical image segmentation architectures has been driven by the need to capture increasingly complex anatomical structures, particularly for challenging targets like brain tumors with ambiguous boundaries. Early convolutional encoder-decoder architectures established the foundational paradigm. The seminal U-Net Ronneberger et al. (2015) introduced a symmetric encoder-decoder with skip connections, effectively preserving spatial details for precise localization. This design was extended to 3D volumes by V-Net Milletarì et al. (2016), which incorporated residual connections and a Dice-based loss function. Subsequent works like nnU-Net Isensee, Jaeger, Kohl, Petersen, and Maier-Hein (2020) showed that a robust, automatically configured U-Net pipeline could achieve state-of-the-art performance across diverse medical tasks by standardizing preprocessing and training. However, these convolutional networks are fundamentally limited by their local receptive fields. Unlike fully connected networks, which can model any input-output relationship, standard convolutions struggle to capture long-range dependencies, making them susceptible to errors in regions with low contrast and fuzzy boundaries where global context is essential for disambiguation.

To overcome the locality constraint of CNNs, transformer-based architectures were introduced, using self-attention mechanisms to model global context. Vision Transformers (ViTs) Dosovitskiy, Beyer, Kolesnikov, Weissenborn, Zhai, Unterthiner, Dehghani, Minderer, Heigold, and Gelly (2020) reformulated image patches as sequences, enabling interactions between all tokens. This paradigm was adapted for segmentation in models like TransUNet Chen, Lu, Yu, Luo, Adeli, Wang, Lu, Yuille, and Zhou (2021), which used a ViT encoder to capture global context and a CNN decoder for spatial detail. For 3D medical data, UNETR Hatamizadeh, Yang, Roth, and Xu (2021) employed a pure transformer as the encoder to directly process 3D patches, while Swin UNETR Hatamizadeh, Nath, Tang, Yang, Roth, and Xu (2022) incorporated the hierarchical Swin Transformer to improve efficiency. Unlike convolutional approaches that aggregate information locally, these models explicitly model relationships between all voxel patches, which

is advantageous for resolving ambiguous boundaries that require holistic scene understanding. However, this capability comes at a significant computational cost, as the self-attention mechanism scales quadratically with the number of input tokens, posing a major challenge for high-resolution 3D volumes Liu, Lin, Cao, Hu, Wei, Zhang, Lin, and Guo (2021).

Recent innovations in state-space models (SSMs) offer a promising alternative for efficient long-range modeling. Inspired by structured state-space sequence models (S4), the Mamba architecture Gu and Dao (2023) introduced a selective scan mechanism with linear complexity in sequence length. This was quickly adapted to vision in models like VMamba Liu, Tian, Zhao, Yu, Xie, Wang, Ye, and Liu (2024a) and, for medical imaging, UMamba Liu, Yang, Zhou, Xi, Yu, Yu, Liang, Shi, Zhang, and Zheng (2024b). Unlike transformers that compute dense pairwise attention, these SSM-based models process sequences with a hidden state that evolves linearly, allowing them to capture global dependencies without the quadratic bottleneck. At the same time, efforts to improve transformer efficiency have led to variants like linear attention Katharopoulos, Vyas, Pappas, and Fleuret (2020) and convolutional attention mechanisms Ma, Xia, Wang, Xiao, Li, and Zheng (2022), which approximate global context with reduced compute. While these emerging models address the efficiency limitations of standard transformers, they often lack explicit architectural inductive biases for modeling the directional and multi-planar relationships that are crucial for defining complex 3D anatomical boundaries in volumetric scans.

2.2. Boundary-Aware Segmentation Techniques

A significant body of work has focused on improving segmentation accuracy at object boundaries, which can be broadly categorized into three families of techniques. The first family involves explicit boundary modeling through distance transform regression or level set methods Moccia, Fiorentino, and Frontoni (2021) Audebert, Boulch, Saux, and Lefèvre (2019). These approaches often formulate the segmentation task as the regression of a signed distance field, where the zero-level set corresponds to the object boundary. While effective for capturing precise contours, these methods incur substantial computational expense, particularly for 3D volumetric data, as they require solving partial differential equations or regressing dense distance maps. The second family employs edge refinement strategies, typically through multi-task learning frameworks that jointly predict segmentation masks and boundary maps Chen, Papandreou, Kokkinos, Murphy, and Yuille (2016) Liao, Hu, Li, Ge, Chen, Li, and Zhu (2021). These methods often incorporate boundary-aware loss functions, such as boundary loss Moccia et al. (2021), to penalize errors at transition zones. However, a common limitation is the application of uniform refinement across all boundary regions, which fails to adapt to local morphological variations and the anisotropic nature of boundaries in 3D anatomical structures.

More recently, attention mechanisms have been used to enhance boundary perception by capturing long-range contextual dependencies. Non-local attention modules Wang, Girshick, Gupta, and He (2017) and deformable convolutions Dai, Qi, Xiong, Li, Zhang, Hu, and Wei (2017) allow networks to aggregate features from spatially distant but semantically relevant regions, which can help resolve ambiguous boundaries. Vision transformers and their hybrid variants further extend this capability through self-attention across image patches Liu et al. (2021) Hatamizadeh et al. (2021). While these methods improve global context modeling, they often lack structured, directional modeling of boundary information. Their computational complexity, which scales quadratically with the number of tokens or input size, presents a significant bottleneck for high-resolution 3D medical images. Furthermore, the unstructured nature of global attention may not efficiently capture the orthogonal, axis-aligned dependencies that are characteristic of anatomical boundaries in medical scans.

The limitations of existing approaches highlight a clear research gap: the need for an efficient, structured mechanism for multi-directional boundary refinement that avoids heavy global computation. Explicit distance methods are computationally prohibitive, edge-refinement techniques lack local adaptation, and global attention mechanisms are inefficient and lack directional bias. This motivates the development of a lightweight module that can perform structured, cross-directional feature interaction specifically tailored for boundary refinement in 3D volumes. Our proposed Cross-Directional Feature Lattice addresses this gap by decomposing the 3D feature volume along anatomical planes and establishing a sparse lattice of interactions, enabling precise boundary localization with linear computational complexity relative to the input size.

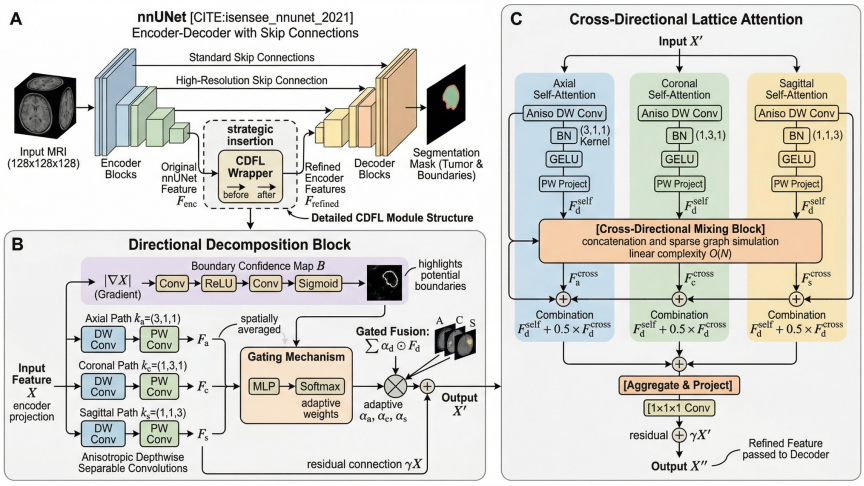

Figure 1: Overall framework of the proposed method. The architecture integrates the Cross-Directional Feature Lattice (CDFL) module into the nnUNet backbone, where it processes high-resolution encoder features via Directional Decomposition and Cross-Directional Lattice Interaction before passing refined features to the decoder.

3. Method

3.1. Overall Framework and Integration

3.1.1. Overall Framework

The proposed method is built upon the nnUNet framework Isensee et al. (2020), a state-of-the-art baseline for medical image segmentation known for its robust performance across diverse datasets. Our core contribution is the Cross-Directional Feature Lattice (CDFL), a plug-in module designed to enhance boundary definition within this established architecture. The overarching design philosophy prioritizes minimal architectural modification to preserve nnUNet's proven strengths in feature extraction and multi-scale processing, while introducing a dedicated mechanism to address the specific challenge of low-contrast, ambiguous tumor boundaries. The framework maintains the standard encoder-decoder structure with skip connections, ensuring compatibility with established training and inference pipelines. The CDFL module is strategically inserted to operate on high-resolution feature maps from the encoder, where fine-grained spatial details necessary for precise boundary localization are most abundant. This positioning allows the module to refine boundary evidence before the features are passed to the decoder for final mask reconstruction, effectively acting as a learned, adaptive boundary refinement filter incorporated into the segmentation pipeline.

3.1.2. Directional Decomposition Block: Motivation and Formulation

The first stage of the CDFL addresses the challenge of capturing anisotropic boundary patterns inherent in 3D anatomical structures. Conventional isotropic convolutions treat all spatial directions equally, which can dilute subtle, directionally specific edge information. The Directional Decomposition Block is motivated by the need to explicitly model boundary features along the primary anatomical axes—axial, coronal, and sagittal—as tumor margins manifest differently when viewed from these orthogonal perspectives. The intuition is to decompose the holistic 3D feature volume into directional components, enabling the network to specialize in and amplify edge-sensitive information along each axis independently.

Formally, given an input feature map $X \in \mathbb{R}^{C \times D \times H \times W}$ from the encoder, the block applies anisotropic depthwise separable convolutions to extract directional features. For each anatomical plane $d \in \{a, c, s\}$ (axial, coronal, sagittal), the operation is defined as:

$$F_d = \mathcal{W}_d^{(pw)} \left(\mathcal{W}_d^{(dw)}(X) \right) \tag{1}$$

where $\mathcal{W}_d^{(dw)}$ denotes a depthwise convolution with a kernel k_d elongated along one spatial dimension ($k_a = (3,1,1)$, $k_c = (1,3,1)$, $k_s = (1,1,3)$) to capture long-range interactions along that axis, and $\mathcal{W}_d^{(pw)}$ is a pointwise convolution that mixes channels. To dynamically fuse these components based on the input's boundary characteristics, a boundary confidence map B is computed from the feature gradient magnitude:

$$B = \sigma\left(\mathcal{W}_2\left(\mathrm{ReLU}\left(\mathcal{W}_1(|\nabla X|)\right)\right)\right) \tag{2}$$

where ∇X is the spatial gradient, $\mathcal{W}_1$ and $\mathcal{W}_2$ are $1 \times 1 \times 1$ convolutions, and σ is the sigmoid function. A gating mechanism then computes adaptive weights α_d for each directional feature via global average pooling and a small multi-layer perceptron (MLP):

$$\alpha = \mathrm{softmax}\left(\mathrm{MLP}\left([\mathrm{GAP}(F_a), \mathrm{GAP}(F_c), \mathrm{GAP}(F_s), \mathrm{GAP}(B)]\right)\right) \tag{3}$$

The final output of the block is a gated fusion of the directional features, combined with a residual connection:

$$X' = \mathrm{IN}\left(\mathcal{W}_{out}\left(\sum_{d\in\{a,c,s\}} \alpha_d \odot F_d\right)\right) + \gamma X \tag{4}$$

where $\mathcal{W}_{out}$ is a $1 \times 1 \times 1$ convolution, IN denotes instance normalization, $\odot$ is element-wise multiplication with broadcasted weights, and γ is a learnable scaling parameter for the residual.

3.1.3. Cross-Directional Lattice Interaction: Motivation and Formulation

While the Decomposition Block extracts axis-specific features, effectively modeling the complex interactions between these orthogonal views is crucial for resolving ambiguous boundary voxels where evidence may be weak or conflicting along a single axis. The Cross-Directional Lattice Interaction (CDLI) module is designed to establish a structured, lightweight interaction lattice that facilitates information exchange across the axial, coronal, and sagittal feature sets. Importantly, this block does not instantiate query-key-value attention; instead, it performs directional refinement and cross-directional channel mixing using anisotropic depthwise filtering and $1 \times 1 \times 1$ projections. The intuition is to allow evidence from one anatomical plane to reinforce or disambiguate boundary predictions in another, thereby constructing a more coherent 3D boundary representation.

The module first projects the input X' into a lower-dimensional space for computational efficiency, generating three directional feature maps $Q_d \in \mathbb{R}^{C' \times D \times H \times W}$ via separate $1 \times 1 \times 1$ convolutions. Each then undergoes a directional refinement operation implemented as an anisotropic depthwise convolution followed by pointwise projection:

$$A_d^{\mathrm{self}} = \mathcal{W}_d^{(att)}\left(\mathrm{GELU}\left(\mathrm{BN}\left(\mathcal{W}_d^{(dw)}(Q_d)\right)\right)\right) \tag{5}$$

where $\mathcal{W}_d^{(dw)}$ uses the same directional kernels as before. To enable cross-directional interaction, the three self-attended features are concatenated and processed by a fusion block that mimics a dense mixing step:

$$[A_a^{\mathrm{cross}}, A_c^{\mathrm{cross}}, A_s^{\mathrm{cross}}] = \mathrm{Split}\left(\mathcal{W}_2\left(\mathrm{GELU}\left(\mathrm{BN}\left(\mathcal{W}_1([A_a^{\mathrm{self}}, A_c^{\mathrm{self}}, A_s^{\mathrm{self}}])\right)\right)\right)\right) \tag{6}$$

Here, $\mathcal{W}_1$ reduces the channel dimension and $\mathcal{W}_2$ expands it back before splitting. The final attended feature for each direction combines its self and cross components:

$$A_d = A_d^{\mathrm{self}} + \beta \cdot A_d^{\mathrm{cross}} \tag{7}$$

with β as a fixed weighting factor (default 0.5). These are then projected back, normalized, and aggregated to produce the refined output:

$$X'' = \mathrm{IN}\left(\mathcal{W}_{agg}([A_a, A_c, A_s])\right) + \gamma X' \tag{8}$$

where $\mathcal{W}_{agg}$ is a final $1 \times 1 \times 1$ convolution. For a fixed reduced channel width, the spatial scaling is linear in the number of voxels, while the pointwise fusion term remains linear in spatial size and quadratic only in the reduced interaction width.

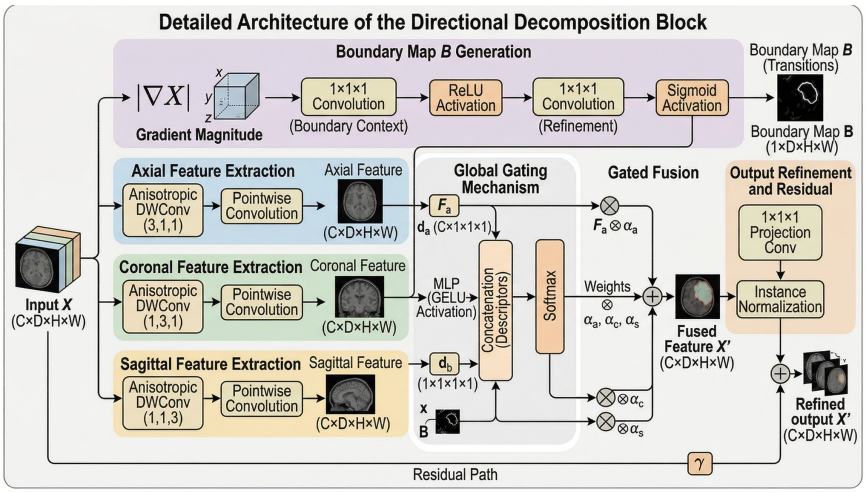

Figure 2: Detailed architecture of the Directional Decomposition Block. The block uses anisotropic depthwise separable convolutions to extract axial, coronal, and sagittal features, dynamically fuses them via a boundary confidence map and global gating mechanism, and adds a residual connection.

3.1.4. Integration Details and Data Flow

The CDFL module is designed to work within the nnUNet architecture with minimal modification. The module is implemented as a wrapper that intercepts the feature flow between the encoder and decoder at the highest resolution stage, where spatial details are most critical. The complete data flow within the augmented nnUNet is as follows. First, the input 3D MRI volume is processed by the standard nnUNet encoder, which produces a hierarchy of multi-scale feature maps. The feature map from the final encoder stage, denoted $F_{enc} \in \mathbb{R}^{C_{high} \times D \times H \times W}$, is first projected to a moderate channel dimension C_{proj} (default 64) via a $1 \times 1 \times 1$ convolution to manage computational cost: $X = \mathcal{W}_{proj}(F_{enc})$. This projected feature X serves as the input to the CDFL module.

The CDFL module then processes X sequentially through the Directional Decomposition Block and the Cross-Directional Lattice Interaction block, as detailed in the previous subsections, yielding the refined feature map X''. This refined output is subsequently projected back to the original encoder channel dimension C_{high} via another $1 \times 1 \times 1$ convolution: $F_{refined} = \mathcal{W}_{back}(X'')$. Finally, $F_{refined}$ replaces the original encoder feature F_{enc} and is passed through the corresponding skip connection to the nnUNet decoder, which proceeds with its standard upsampling and convolution operations to generate the final segmentation mask. This wrapper-based approach requires no modification to the core nnUNet encoder or decoder layers or the inference pipeline, ensuring full compatibility and ease of adoption. The entire framework thus retains the robustness and automated configuration benefits of nnUNet while gaining specialized boundary refinement capabilities through the plug-in CDFL module.

3.2. Directional Decomposition Block

The Directional Decomposition Block serves as the initial stage of the CDFL module, designed to decompose the holistic 3D segmentation problem into manageable directional components. This decomposition is motivated by the observation that ambiguous tumor boundaries in MRI often manifest differently across orthogonal anatomical planes; an edge that is indistinct in the axial view may be more clearly defined in the coronal or sagittal view. By explicitly extracting and weighting features along these primary axes, the block generates axis-specific representations that preserve inter-voxel spatial relationships while identifying boundary-sensitive regions, thereby providing a richer foundation for subsequent refinement.

The technical implementation employs anisotropic depthwise separable convolutions to efficiently extract directional features. Given an input feature map $X \in \mathbb{R}^{C \times D \times H \times W}$, the block applies three separate pathways. Each pathway consists of a depthwise convolution with a kernel elongated along a single spatial dimension, followed by a pointwise convolution to mix channels. Formally, the axial, coronal, and sagittal features are

computed as:

$$F_a = \mathrm{PWConv}(\mathrm{DWConv}_{k_a}(X)), \quad F_c = \mathrm{PWConv}(\mathrm{DWConv}_{k_c}(X)), \quad F_s = \mathrm{PWConv}(\mathrm{DWConv}_{k_s}(X)), \tag{9}$$

where the anisotropic kernels are $k_a = (3, 1, 1)$, $k_c = (1, 3, 1)$, and $k_s = (1, 1, 3)$. This design ensures that each pathway focuses on aggregating contextual information along a specific anatomical axis, mimicking a radiologist's multi-planar assessment, while the depthwise separable structure maintains parameter efficiency Chollet (2016).

To dynamically fuse these directional components based on the presence of boundary evidence, a boundary confidence map B is derived from the input feature gradients. The gradient magnitude $|\nabla X|$, computed along all three spatial dimensions, serves as a low-level indicator of potential edges. This signal is processed by two $1 \times 1 \times 1$ convolutions with a ReLU activation in between, followed by a sigmoid function σ to produce a normalized confidence map:

$$B = \sigma(\mathrm{Conv}_{1\times1\times1}(\mathrm{ReLU}(\mathrm{Conv}_{1\times1\times1}(|\nabla X|)))). \tag{10}$$

This map highlights voxels where feature transitions are sharp, providing a data-dependent cue for where directional decomposition is most critical. A global gating mechanism then performs the weighted fusion of the directional features. For computational efficiency, the full-resolution features F_a, F_c, F_s and the boundary map B are first reduced to compact descriptors via global average pooling. These descriptors are concatenated and processed by a multi-layer perceptron (MLP) with GELU activation, whose output three scalars are normalized via a softmax function to produce the fusion weights $\alpha_a, \alpha_c, \alpha_s$:

$$\alpha = \mathrm{softmax}\left(\mathrm{MLP}\left([\mathrm{AvgPool}(F_a), \mathrm{AvgPool}(F_c), \mathrm{AvgPool}(F_s), \mathrm{AvgPool}(B)]\right)\right). \tag{11}$$

These weights are broadcast and applied to the full-resolution features, yielding the fused output $X' = \alpha_a \cdot F_a + \alpha_c \cdot F_c + \alpha_s \cdot F_s$. This design allows the network to emphasize the most informative directional perspective based on global boundary evidence, adapting to the anisotropic morphology of each tumor.

Finally, the fused feature X' is projected via a $1 \times 1 \times 1$ convolution and normalized with instance normalization. A residual connection from the original input X, scaled by a learnable parameter γ, is added to preserve original information and stabilize gradient flow Shen, Zhu, Yang, Chen, Pan, Chen, Xiao, and Du (2021). The output of this block thus consists of directionally decomposed and boundary-aware features, which are passed to the subsequent Cross-Directional Lattice Interaction module for further structured refinement. This two-stage separation of decomposition and interaction ensures the module remains computationally tractable for high-resolution 3D volumes while providing explicit modeling of anatomical planes.

3.3. Cross-Directional Lattice Interaction

The Cross-Directional Lattice Interaction (CDLI) module constitutes the core refinement mechanism of the CDFL, designed to establish structured interactions between the orthogonal directional features produced by the preceding decomposition block. While the decomposition isolates boundary-sensitive information along each anatomical axis, the boundary ambiguity in low-contrast regions often requires reconciling evidence from multiple views. This module addresses that need by constructing a lightweight interaction lattice that facilitates efficient information exchange across the axial, coronal, and sagittal planes without the prohibitive computational cost of global self-attention mechanisms Vaswani, Shazeer, Parmar, Uszkoreit, Jones, Gomez, Kaiser, and Polosukhin (2017). We therefore use the term *interaction* rather than transformer attention to emphasize that the block is implemented with convolutions and channel mixing rather than token-wise affinity matrices.

The design intuition is to perform two complementary operations within each direction: local directional refinement along the primary axis and cross-directional mixing. First, each directional feature map undergoes a lightweight intra-directional refinement operation. This is implemented with an efficient sequence of anisotropic depthwise convolution, batch normalization, GELU activation, and a pointwise convolution. For instance, the axial feature F_a is processed as $\mathrm{Conv}_{1\times1\times1}(\mathrm{GELU}(\mathrm{BN}(\mathrm{DWConv}_{(3,1,1)}(F_a))))$, where the elongated kernel $(3, 1, 1)$ selectively aggregates features along the depth dimension. This design captures

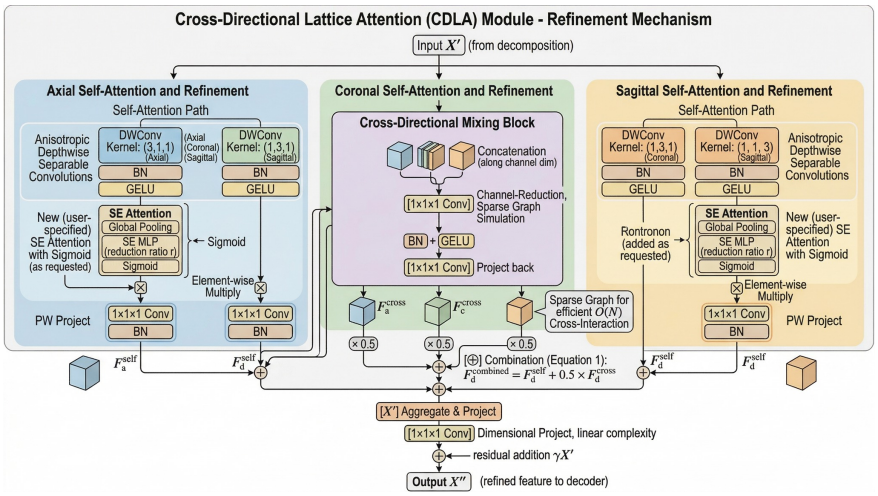

Figure 3: Detailed architecture of the Cross-Directional Lattice Interaction (CDLI) module. The module performs lightweight directional refinement within each anatomical plane and enables cross-directional interaction through a fusion block, combining intra-directional and cross-directional components before aggregation and residual addition.

axis-aligned contextual dependencies with linear spatial scaling, a crucial efficiency consideration for 3D volumes Dong, Bao, Chen, Zhang, Yu, Yuan, Chen, and Guo (2021).

Cross-directional interaction is then achieved through a dedicated mixing operation. The three refined directional features are concatenated along the channel dimension and processed by a compact fusion block. This block consists of a channel-reducing $1 \times 1 \times 1$ convolution, batch normalization, GELU activation, and a final $1 \times 1 \times 1$ convolution that projects the features back to the original channel count before splitting them into three components. This process implements structured cross-directional channel mixing, allowing information to flow from one anatomical view to another. The refined features from both pathways are combined using a fixed, stable weighting scheme:

$$F_d^{\text{combined}} = F_d^{\text{self}} + 0.5 \times F_d^{\text{cross}} \quad \text{for} \quad d \in \{a, c, s\}. \tag{12}$$

This combination rule prioritizes the refined intra-directional information while incorporating a moderated contribution from the cross-mixed features, promoting stable gradient flow and preventing the interaction branch from overwhelming the directional signal.

Finally, the three updated directional features are individually projected back to the module's input dimension via $1 \times 1 \times 1$ convolutions and added to the original input through residual connections, followed by instance normalization. They are then concatenated and fused through a final $1 \times 1 \times 1$ convolution to produce the refined output feature map X''. For fixed reduced channel width, the spatial cost of this lattice construction remains linear in the number of voxels N, whereas standard global self-attention scales quadratically with N Wang et al. (2017). The remaining pointwise fusion term scales as $O(3C_{\text{int}}^2 N)$ and is therefore controlled by the deliberately small interaction width. This design makes the CDLI module suitable for processing high-resolution 3D medical volumes without becoming a dominant computational bottleneck.

3.4. Implementation and Complexity Analysis

The CDFL module is designed with computational efficiency as a primary consideration, given the high-resolution nature of 3D medical volumes. To manage memory footprint, the module operates on a projected feature space. The input feature map from the encoder, with a channel dimension C_{in}, is first projected to a reduced dimension $C_{proj} = 64$ via a $1 \times 1 \times 1$ convolution. This projection significantly reduces the computational load of subsequent operations. Within the Cross-Directional Lattice Interaction block, the features are further projected to an even lower interaction width $C_{\text{int}} = 32$ for directional refinement and cross-directional mixing. This default width was selected based on a sensitivity analysis, which indicated that $C_{\text{int}} = 32$ provided a strong balance between representational capacity and computational cost.

The computational complexity of the CDFL module is dominated by operations that are linear in spatial size, making it suitable for volumetric data. Consider an input feature map $X \in \mathbb{R}^{C_{proj} \times D \times H \times W}$. The Directional Decomposition Block employs depthwise separable convolutions with anisotropic kernels of size 3. The complexity for processing one directional component is $O(C_{proj} \cdot D \cdot H \cdot W \cdot 3)$, dominated by the depthwise convolution. The global gating mechanism operates on spatially averaged descriptors, incurring negligible cost $O(C_{proj})$. The Cross-Directional Lattice Interaction block performs anisotropic directional refinement with $O(C_{\text{int}} \cdot D \cdot H \cdot W \cdot 3)$ complexity per direction. The cross-mixing fusion involves concatenation and pointwise convolutions, with complexity $O(3 \cdot C_{\text{int}}^2 \cdot D \cdot H \cdot W)$. Thus, for fixed C_{proj} and C_{int}, the overall scaling with respect to the number of voxels remains linear. In contrast, a standard multi-head self-attention (MHSA) block, as used in transformer-based models Dosovitskiy et al. (2020), exhibits quadratic complexity $O((D \cdot H \cdot W)^2 \cdot C_{proj})$, which becomes prohibitive for high-resolution 3D features. A standard 3D convolutional block with a $3 \times 3 \times 3$ kernel has complexity $O(C_{proj}^2 \cdot D \cdot H \cdot W \cdot 27)$. The CDFL design therefore occupies a favorable middle ground, offering richer directional context aggregation than standard convolution at a fraction of the cost of global self-attention.

In terms of parameter count, the CDFL module is lightweight. In our implementation, the Directional Decomposition Block contributes roughly 15K parameters and the Cross-Directional Lattice Interaction block contributes about 45K, yielding an overall overhead of approximately 60K parameters. Relative to the nnUNet backbone used in this study, this corresponds to well below 0.1% additional parameters. We therefore emphasize parameter efficiency and spatial scaling rather than claiming wall-clock acceleration, since actual runtime also depends on implementation details, memory access, and kernel optimization.

The linear complexity and low parameter count address critical practical constraints in 3D medical image analysis. Training segmentation models on high-resolution volumes is often memory-bound; the CDFL's efficient design allows it to be inserted into the high-resolution skip connections of an encoder-decoder network without exhausting GPU memory. During inference, the minimal latency overhead ensures the module can be used in clinical settings where processing speed may be a consideration. The directional inductive bias, structured around anatomical planes (axial, coronal, sagittal), is inherently well-suited for medical imaging data, which is routinely visualized and interpreted along these standard orientations by radiologists. This design choice not only improves performance on ambiguous boundaries but does so through a computationally efficient mechanism that aligns with the data's intrinsic structure.

4. Experiments

4.1. Datasets and Implementation Details

4.1.1. Dataset Description

The experiments were conducted on the publicly available *GDMRI-CT* dataset, a comprehensive collection of multi-modality MRI scans for intracranial germinoma segmentation. This dataset comprises 50 volumetric cases from patients with pathologically confirmed intracranial germinomas, a tumor type most prevalent in adolescents. Each case includes four co-registered MRI modalities: T2-weighted imaging (T2WI), T2-FLAIR, T1-weighted imaging (T1WI), and contrast-enhanced T1 (T1-CE), all resampled to the T2 space to ensure spatial alignment. The target structure for segmentation is the enhancing tumor component of the germinoma. Expert annotations were meticulously created by two radiologists with 8 and 10 years of experience, respectively, using a semi-automatic process with the ITK-SNAP software followed by manual layer-by-layer refinement and consensus review. This process specifically avoided including adjacent hemorrhage, necrosis, or cystic lesions to ensure the masks accurately reflect the viable tumor tissue. The clinical relevance of this task is paramount, as germinomas are highly sensitive to chemo-radiotherapy and typically do not require surgical resection. Consequently, precise tumor definition is crucial for optimal radiotherapy planning, helping to avoid unnecessary neurosurgical procedures and ensuring accurate targeting.

4.1.2. Evaluation Metrics

Segmentation performance was evaluated using standard volumetric and boundary-aware metrics. The primary metric for volumetric overlap is the Dice Similarity Coefficient (DSC), which measures the agreement

between the predicted segmentation P and the ground truth G:

$$\mathrm{DSC}(P,G) = \frac{2|P \cap G|}{|P| + |G|} \tag{13}$$

A higher DSC indicates better overall tumor region capture. To specifically assess the accuracy of boundary definition, which is the central challenge addressed by our method, we employ the 95th percentile Hausdorff Distance (HD95). This metric calculates the 95th percentile of the maximum distances between the surfaces of P and G, making it robust to isolated outliers:

$$\mathrm{HD95}(P,G) = \max\left(\mathrm{percentile}_{95}\left(\min_{g\in\partial G} d(p,g)\right), \mathrm{percentile}_{95}\left(\min_{p\in\partial P} d(p,g)\right)\right) \tag{14}$$

A lower HD95 score signifies superior boundary precision, which is critical for clinical applications where an error margin under 4 mm is often considered acceptable for surgical or radiotherapy planning. We also report sensitivity and specificity to provide a complete picture of the model's ability to correctly identify tumor and non-tumor voxels, respectively.

4.1.3. Implementation Details

Our proposed CDFL module was incorporated into the nnUNet framework using the *3d_fullres* configuration. The model was trained for 100 epochs with a batch size of 2 on an NVIDIA GeForce RTX 4090 GPU. We used the SGD optimizer with Nesterov momentum (0.99), a weight decay of 3×10^{-5}, and an initial learning rate of 0.01, which was decayed using a polynomial learning rate scheduler. The loss function was a combination of Dice and cross-entropy loss. The input patch size was fixed to $16 \times 320 \times 320$ voxels. This anisotropic patch shape follows the nnUNet configuration selected after preprocessing and reflects the slice-to-plane imbalance of the resampled data: the through-plane extent is kept relatively small to satisfy memory constraints while preserving high in-plane resolution for boundary delineation. Accordingly, the complexity discussion in Section 3.4 should be interpreted as an analysis of spatial scaling and reduced channel widths rather than as an assumption that training used isotropic cubic crops. The training used the standard nnUNet preprocessing pipeline, which includes resampling to a median voxel spacing, intensity normalization (z-scoring), and data augmentation techniques such as rotation, scaling, and elastic deformations. Standard nnUNet postprocessing was also applied. The dataset was split into training and testing sets in an 8:2 ratio. For a fair comparison, all baseline methods were evaluated using the same nnUNet preprocessing and postprocessing pipeline. For non-nnUNet baselines (e.g., STUNet, UMamba), we followed the original implementation or the authors' recommended configuration when available, using official default settings for any unspecified hyperparameters to ensure reproducibility and a fair assessment of each model's inherent capabilities.

4.2. Ablation Studies

We conduct comprehensive ablation studies to validate the architectural design of the Cross-Directional Feature Lattice (CDFL) module. The experiments systematically evaluate the contribution of each component and analyze the impact of key hyperparameters on the segmentation performance.

4.2.1. Component Removal Studies

To validate the contribution of each component, we conducted ablation studies by removing individual modules from the full CDFL. The results are presented in Table 1. The baseline model without the CDFL module (w/o CDFL) yields a Dice score of 0.6811 and an HD95 of 14.1506, representing a significant performance drop of 7.8% in Dice and a 154% increase in boundary error compared to the full model. This confirms that the proposed module is essential for addressing the low-contrast boundary challenge in germinoma segmentation.

Removing the Directional Decomposition Block (w/o DD) results in a Dice score of 0.7147 and an HD95 of 8.8228. The performance degradation highlights the importance of explicitly decomposing features along orthogonal anatomical planes to capture boundary information from multiple perspectives. The most substantial impact is observed when the Cross-Directional Interaction mechanism is removed (w/o CDI), which reduces the Dice score to 0.6777. This indicates that the structured interaction between directional

Table 1
Component ablation results. Removing any module degrades performance, validating the contribution of each component.

Configuration	Removed Component	Dice Score	HD95 Score
Full Model	-	**0.7387**	**5.5790**
w/o CDFL	CDFL (Cross-Directional Feature Lattice)	0.6811	14.1506
w/o DD	DD (Directional Decomposition)	0.7147	8.8228
w/o CDI	CDI (Cross-Directional Interaction)	0.6777	10.7524
w/o BCM	BCM (Boundary Confidence Module)	0.7354	6.8782

Table 2
Sensitivity analysis of the reduced interaction dimension in the Cross-Directional Lattice Interaction module.

Variant	Dice Score	HD95 Score
Proposed Method (Full Model)	**0.7387**	**5.5790**
ID-8 (Interaction Dimension 8)	0.6975	9.2375
ID-16 (Interaction Dimension 16)	0.7051	17.5085
ID-32 (Interaction Dimension 32)	0.7401	8.2080
ID-64 (Interaction Dimension 64)	0.7343	8.2673
ID-128 (Interaction Dimension 128)	0.7286	8.4090

features is the core mechanism for resolving boundary ambiguity, as it allows evidence from one anatomical view to reinforce predictions in another. The Boundary Confidence Module (BCM) provides a more subtle but consistent benefit; its removal (w/o BCM) leads to a slight decrease in Dice (0.7354) and a noticeable increase in HD95 (6.8782). This demonstrates that dynamically weighting directional features based on a learned boundary map helps the model focus computational resources on ambiguous transition zones, leading to more precise edge localization.

4.2.2. Interaction Dimension Analysis

The Cross-Directional Lattice Interaction block operates on projected features with a reduced channel dimension to maintain efficiency. We investigate the sensitivity of this interaction width, with results shown in Table 2. A dimension of 8 (ID-8) is insufficient to capture the complex cross-directional relationships, yielding a Dice score of 0.6975. Increasing the dimension to 16 (ID-16) improves Dice to 0.7051 but results in the worst HD95 performance (17.5085), suggesting an unstable operating point at this intermediate width.

The proposed configuration uses an interaction width of 32 (ID-32), which achieves the best Dice score within the sensitivity sweep and competitive HD95. The full-model result reported in the main experiments (0.7387 Dice / 5.5790 HD95) corresponds to the final selected checkpoint used for the quantitative comparison, whereas Table 2 summarizes an independent sensitivity sweep conducted under the same training protocol. Because these runs were trained separately on a small dataset, minor numerical discrepancies between the ID-32 row and the final reported checkpoint are expected and should be interpreted as between-run variation rather than as a contradiction in the selected default width. Further increasing the dimension to 64 (ID-64) and 128 (ID-128) leads to a gradual decline in both Dice and HD95 performance, indicating diminishing returns with excessive channel capacity in the interaction block. These results support our choice of an interaction width of 32 as a reasonable default for the proposed module.

4.3. State-of-the-Art Comparisons

To comprehensively evaluate the performance of the proposed Cross-Directional Feature Lattice (CDFL) module, we compare it against several state-of-the-art segmentation models on the GDMRI-CT dataset. The following analysis presents quantitative results, visual comparisons, and an examination of boundary-specific performance.

4.3.1. Performance on GDMRI-CT

The quantitative comparison against five contemporary segmentation architectures is presented in Table 3. Our proposed method, which incorporates the CDFL module into the nnUNet framework, achieves the highest Dice score of 0.7387 and the lowest 95th percentile Hausdorff Distance (HD95) of 5.5790. This

Table 3
State-of-the-art comparison on the GDMRI-CT dataset.

Method	Dice Score	HD95
UNetPlusPlus Zhou, Siddiquee, Tajbakhsh, and Liang (2018)	0.6691	16.6390
nnUNet Isensee et al. (2020)	0.7101	7.4830
MedNeXt Roy, Koehler, Ulrich, Baumgartner, Petersen, Isensee, Jaeger, and Maier-Hein (2023)	0.7116	8.5452
UMamba Liu et al. (2024b)	0.7146	8.2271
STUNet Huang, Wang, Deng, Ye, Su, Sun, He, Gu, Gu, and Zhang (2023)	0.7233	8.4485
Proposed (CDFL)	**0.7387**	**5.5790**

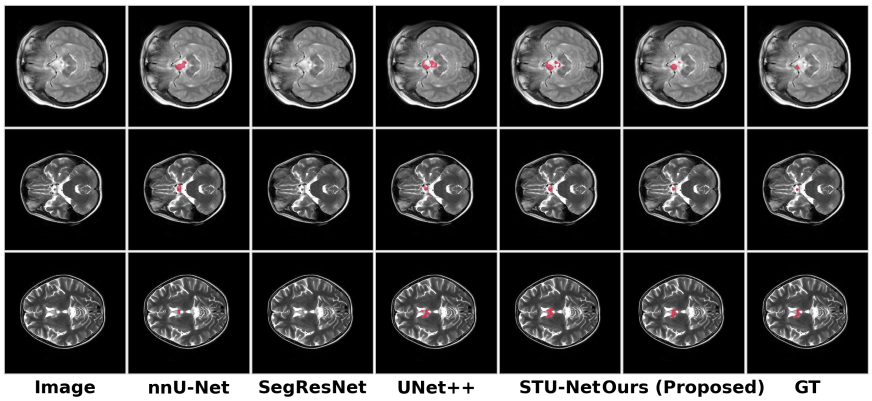

Figure 4: Qualitative comparison of segmentation results. Columns show the input image, predictions from baseline methods (nnUNet, SegResNet, UNet++, STUNet), our proposed method, and the ground truth. Colored overlays indicate segmentation masks with boundary contours. Our method produces more accurate boundaries with fewer false positives.

represents a Dice improvement of 2.12% over the strongest baseline, STUNet (0.7233), and a substantial 33.97% reduction in HD95 compared to the same model. Notably, the proposed method also surpasses other efficient architectures like UMamba (0.7146 Dice) and MedNeXt (0.7116 Dice). While nnUNet achieves a competitive HD95 of 7.4830, our method reduces this boundary error by approximately 25%, directly addressing the core challenge of ambiguous tumor margins. The results show that the CDFL module provides a consistent performance boost, establishing a new state-of-the-art for this clinically relevant segmentation task.

The superior boundary definition capability of our method is qualitatively evident in Figure 4. In cases where baseline models like nnUNet and STUNet produce over-segmented regions or fail to capture subtle intensity transitions at the tumor periphery, the proposed method adheres more closely to the ground truth contours. This visual improvement aligns with the quantitative HD95 reduction and stems from the CDFL module's explicit multi-directional refinement. By decomposing the feature space along anatomical planes and establishing structured cross-directional interactions, the module effectively resolves ambiguities in low-contrast transition zones that challenge conventional CNNs and even recent global-context models.

A per-case analysis, shown in Figure 5, reveals that our method outperforms STUNet in 8 out of 10 test cases. The gains are particularly pronounced for small and medium-sized tumors, where the boundary ambiguity problem is most acute due to partial volume effects and lower signal-to-noise ratios. This consistent per-case improvement underscores the robustness of the proposed approach. The mechanism-based advantage is further validated by the boundary error analysis in Figure 6. Our method demonstrates consistently lower HD95 scores across all tumor volume categories, with the most significant improvement observed for small tumors. The reduced variance and fewer extreme outliers in HD95 for our method indicate that the CDFL module provides reliable boundary refinement regardless of tumor size, a critical requirement for clinical deployment where performance must be predictable across a heterogeneous patient population.

The cumulative distribution of boundary errors, presented in Figure 7, shows that our method's HD95 curve dominates those of all baselines, reaching higher cumulative probabilities at lower distance

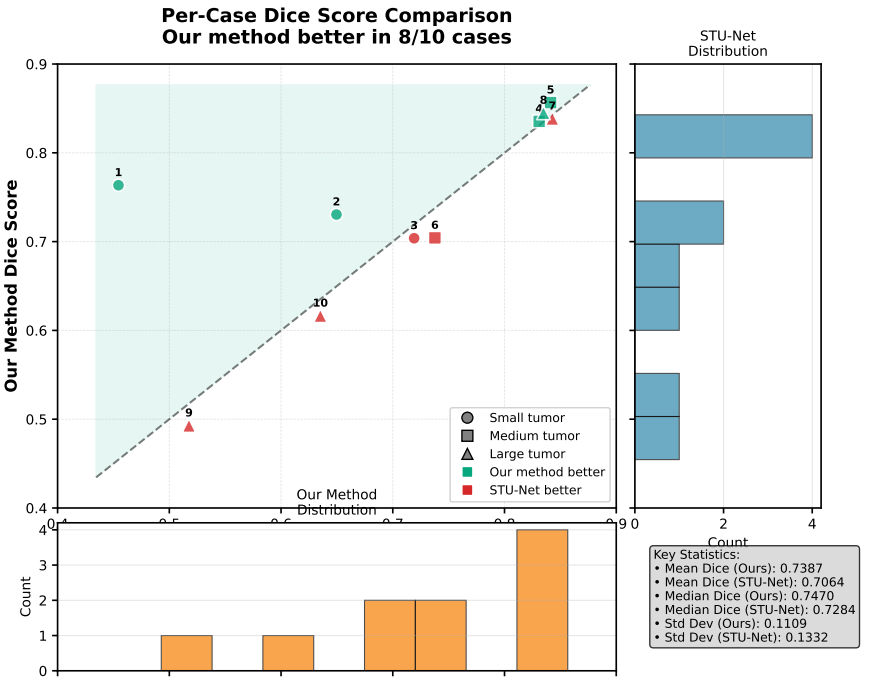

Figure 5: Per-case Dice score comparison between our method and the strongest baseline (STUNet). Each point represents one test case, with marker shape indicating tumor size category (small/medium/large) and color indicating performance comparison (green: our method better, red: STUNet better). Points above the diagonal indicate our method outperforms the baseline. Marginal histograms show the distribution of scores for each method. Our method shows superior performance in 8 out of 10 cases, with particularly strong gains in small and medium tumors.

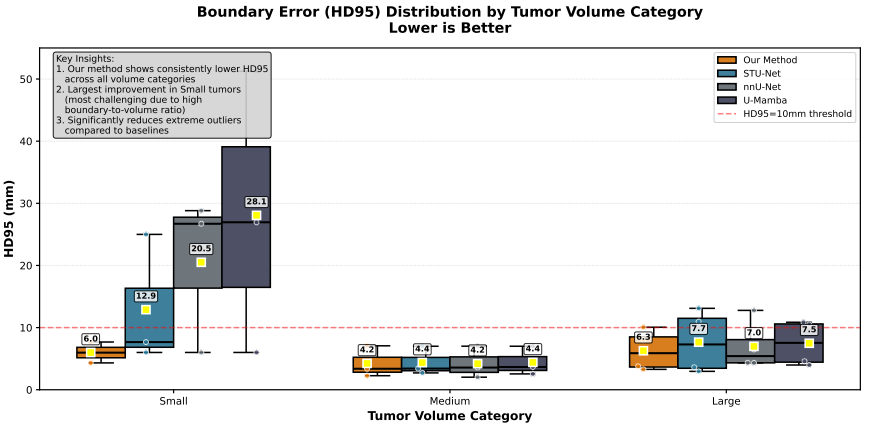

Figure 6: Distribution of boundary errors (HD95) across different tumor volume categories. Our method demonstrates consistently lower HD95 scores across all tumor sizes, with the most significant improvement observed in small tumors where boundary ambiguity is most challenging. The yellow squares indicate mean HD95 values for each method-volume combination. Our method shows reduced variance and fewer extreme outliers compared to all baselines, validating the effectiveness of the CDFL module for boundary refinement.

thresholds. This statistical perspective confirms that the improvement is not due to a few outlier cases but represents a systematic shift towards lower boundary errors across the entire test set. Clinically, the achieved HD95 of 5.58 mm represents a meaningful advancement. Precise tumor boundary definition is crucial for germinoma management, as these tumors are highly radiosensitive and accurate segmentation

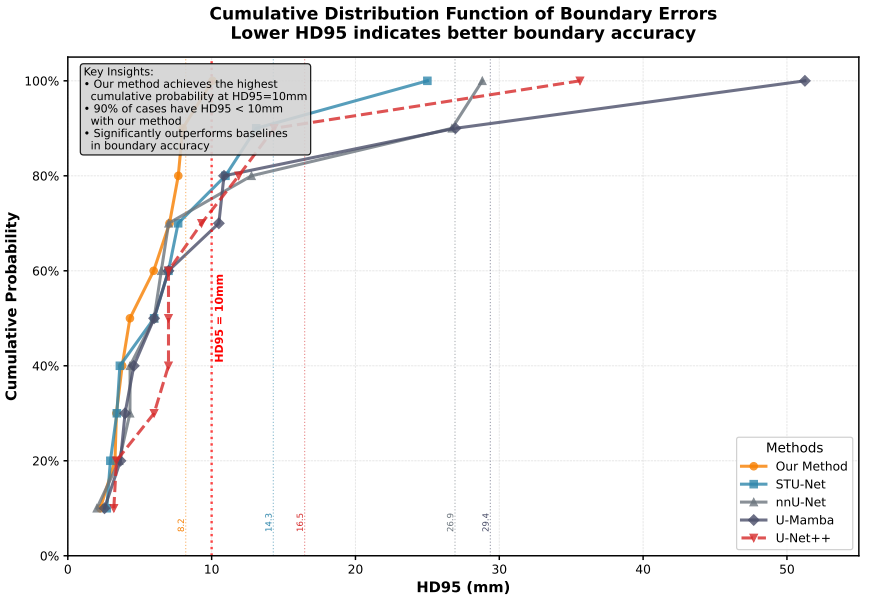

Figure 7: Cumulative Distribution of Boundary Errors: ECDF Analysis

directly informs radiotherapy planning, helping to minimize radiation exposure to adjacent critical brain structures. The demonstrated performance establishes the proposed CDFL module as an effective solution for enhancing boundary awareness in 3D medical image segmentation without the computational burden of explicit distance transform regression or global token-wise self-attention mechanisms.

5. Discussion

5.1. Interpretation of Results

The experimental results show that the proposed Cross-Directional Feature Lattice (CDFL) module significantly enhances the segmentation of intracranial germinomas, a task characterized by low contrast and ambiguous boundaries. Our method achieved a Dice score of 0.7387 and an HD95 of 5.5790, outperforming all evaluated state-of-the-art baselines on the publicly available GDMRI-CT dataset. The 2.12% improvement in Dice score over the strongest baseline (STUNet) and the more substantial 33.97% reduction in HD95 are particularly noteworthy. These quantitative gains are corroborated by the qualitative analysis in Figure 4, which shows our method produces segmentation masks with more accurate boundaries and fewer false positives, especially in regions where tumor tissue blends with adjacent brain parenchyma.

The per-case analysis in Figure 5 reveals that our method outperforms STUNet in 8 out of 10 test cases, with the most pronounced improvements observed for small and medium-sized tumors. This finding is critical, as smaller lesions inherently present a greater boundary definition challenge due to a higher surface-area-to-volume ratio and more pronounced partial volume effects. The superior performance across all tumor sizes, as visualized in the boundary error distribution (Figure 6), validates the core design principle of the CDFL: its ability to refine boundary information by using structured, multi-directional context. The cumulative error distribution in Figure 7 further confirms that our method produces a higher proportion of cases with low boundary errors compared to all baselines.

5.2. Implications of the Proposed Method

The success of the CDFL module stems from its targeted approach to a well-defined problem in medical image segmentation. Unlike generic architectural modifications that aim to improve overall feature representation, the CDFL is explicitly designed to address the specific challenge of latent boundary ambiguity. Its two-stage design (decomposition followed by structured interaction) provides a computationally efficient

pathway to incorporate long-range, multi-directional evidence for boundary localization. This represents a meaningful departure from prior boundary-aware methods. It avoids the prohibitive cost of explicit distance transform regression Ma, Wei, Zhang, Wang, Lv, Zhu, Chen, Liu, Peng, and Wang (2020) and the lack of local adaptation in uniform boundary refinement schemes Kervadec, Bouchtiba, Desrosiers, Granger, Dolz, and Ayed (2018). Furthermore, by using anisotropic convolutions and a lightweight fusion block, it realizes cross-directional information exchange reminiscent of transformer-style communication, but implemented with convolutions and pointwise projections rather than token-wise attention matrices, making it practical for high-resolution 3D volumes.

The clinical implication of this technical advancement is direct. For germinomas, which are highly sensitive to radiotherapy and typically managed non-surgically, precise tumor definition is paramount for optimal treatment planning Wang, Liu, Yang, Ning, Ma, Zhang, and Liao (2022). Over-segmentation can lead to unnecessary irradiation of healthy brain tissue, increasing the risk of neurocognitive sequelae, while under-segmentation risks leaving residual tumor cells. By providing more accurate and consistent boundary definitions, as evidenced by the lower HD95 scores and reduced variance, the proposed method can contribute to more reliable radiotherapy target volume definition, potentially improving therapeutic outcomes and reducing side effects.

5.3. Comparison with Existing Work

Our method's performance must be contextualized within the landscape of contemporary segmentation models. We compared against a representative set of strong baselines, including the highly engineered and dataset-adaptive nnUNet Isensee et al. (2020), transformer-based models like STUNet Gao, Zhou, Liu, Yan, Zhang, and Metaxas (2022) and MedNeXt Roy et al. (2023), and the recent state-space model UMamba Liu et al. (2024b). While these models excel at capturing global context or modeling long-range dependencies, they are not specifically optimized for the specific task of boundary refinement in 3D. The CDFL module, by contrast, introduces an inductive bias for directional decomposition and interaction that is naturally aligned with the 3D anatomy of medical images.

The ablation studies provide clear evidence for the contribution of this design. Removing the entire CDFL module caused a severe performance drop (Dice: 0.6811), highlighting its overall necessity. The most significant degradation in Dice score occurred when removing the Cross-Directional Interaction (CDI) component (Dice: 0.6777), emphasizing that the interaction between orthogonal directional features is more critical than the decomposition alone for resolving ambiguity. This suggests that simply extracting multi-view features is insufficient; enabling these features to communicate and reinforce each other is key to disambiguating the boundary. The sensitivity sweep further indicates that the reduced interaction width should be kept moderate: excessively small or large values degrade performance, whereas the selected width of 32 yields the most favorable overall trade-off across independent runs.

5.4. Limitations and Future Work

Despite the promising results, this study has several limitations that point to directions for future research. The evaluation was conducted on a single, publicly available dataset of intracranial germinomas. While this provides a focused benchmark, the generalizability of the CDFL module to other tumor types (e.g., gliomas with infiltrative boundaries) or anatomical regions needs to be validated. In addition, the current study is based on a single train/test split with a small held-out cohort, so the ablation trends should be interpreted as indicative rather than definitive estimates of population-level variance. The module's reliance on anisotropic kernels aligned with standard anatomical planes may also be less effective for structures with highly irregular or curved boundaries not aligned with these axes.

The current implementation incorporates the CDFL as a single plug-in module within the nnUNet encoder-decoder. An interesting future direction would be to investigate a multi-scale strategy, where CDFL modules operate at different feature resolutions to refine boundaries at varying scales. Furthermore, while the module is designed for efficiency, a detailed analysis of its inference speed and memory footprint compared to the added baselines, especially on clinical hardware, would strengthen its practical utility assessment.

The boundary confidence map is derived from feature gradients, which may not always perfectly correlate with the true anatomical boundary, especially in very low-contrast regions or in areas where texture changes do not correspond to anatomical interfaces. Exploring learned or hybrid approaches for boundary region

identification, potentially incorporating uncertainty estimation Žan Klaneček, Wagner, Wang, Cockmartin, Marshall, Schott, Deatsch, Studen, Hertl, and Jarm (2023), could make the gating mechanism in the Directional Decomposition Block more robust. Extending the cross-directional interaction concept to also model channel-wise dependencies or combining it with emerging efficient architectures like state-space models could yield further performance gains.

6. Conclusion

In conclusion, we have presented the Cross-Directional Feature Lattice, a novel and efficient architectural module designed to address the critical challenge of segmenting tumors with low-contrast, ambiguous boundaries in 3D medical images. By decomposing features along anatomical planes and establishing structured, lightweight interactions between them, the CDFL enables precise boundary localization without the computational burden of global token-wise attention or distance transform regression. Comprehensive experiments on a germinoma MRI dataset show state-of-the-art performance, with significant improvements in boundary accuracy as measured by HD95. The module's plug-and-play design ensures easy incorporation into existing frameworks like nnUNet, offering a practical tool for enhancing segmentation quality in clinical applications where boundary precision is paramount.

The primary limitations of this work include its validation on a single tumor type and dataset, which necessitates further testing to confirm generalizability across other brain lesions and imaging protocols. Future work will focus on extending the CDFL framework to other segmentation tasks and imaging modalities, investigating its application at multiple network scales, and exploring more advanced mechanisms for initial boundary region identification. The module's lightweight, plug-and-play design offers a practical pathway for improving boundary-aware segmentation in broader medical imaging applications.

References

L. Mayeta-Revilla, E. P. Cavieres, M. Salinas, D. Mellado, S. Ponce, F. T. Moyano, S. Chabert, M. Querales, J. Sotelo, R. Salas, Radiomics-driven neuro-fuzzy framework for rule generation to enhance explainability in mri-based brain tumor segmentation, Frontiers Neuroinformatics (2025).

Y. Zhang, H. Liu, Q. Hu, Transfuse: Fusing transformers and cnns for medical image segmentation, International Conference on Medical Image Computing and Computer-Assisted Intervention (2021).

O. Ronneberger, P. Fischer, T. Brox, U-net: Convolutional networks for biomedical image segmentation, International Conference on Medical Image Computing and Computer-Assisted Intervention (2015).

Y. Xue, H. Tang, Z. Qiao, G. Gong, Y. Yin, Z. Qian, C. Huang, W. Fan, X. Huang, Shape-aware organ segmentation by predicting signed distance maps, AAAI Conference on Artificial Intelligence (2019).

B. Murugesan, K. Sarveswaran, S. M. Shankaranarayana, K. Ram, M. Sivaprakasam, Psi-net: Shape and boundary aware joint multi-task deep network for medical image segmentation, Annual International Conference of the IEEE Engineering in Medicine and Biology Society (2019).

F. Milletarì, N. Navab, S.-A. Ahmadi, V-net: Fully convolutional neural networks for volumetric medical image segmentation, International Conference on 3D Vision (2016).

L. Xu, A new multivariate test formulation: theory, implementation, and applications to genome-scale sequencing and expression, Applied Informatics (2016).

F. Isensee, P. Jaeger, S. A. A. Kohl, J. Petersen, K. H. Maier-Hein, nnu-net: a self-configuring method for deep learning-based biomedical image segmentation, Nature Methods (2020).

A. Dosovitskiy, L. Beyer, A. Kolesnikov, D. Weissenborn, X. Zhai, T. Unterthiner, M. Dehghani, M. Minderer, G. Heigold, S. Gelly, An image is worth 16x16 words: Transformers for image recognition at scale, International Conference on Learning Representations (2020).

J. Chen, Y. Lu, Q. Yu, X. Luo, E. Adeli, Y. Wang, L. Lu, A. Yuille, Y. Zhou, Transunet: Transformers make strong encoders for medical image segmentation, arXiv.org (2021).

A. Hatamizadeh, D. Yang, H. Roth, D. Xu, Unetr: Transformers for 3d medical image segmentation, IEEE Workshop/Winter Conference on Applications of Computer Vision (2021).

A. Hatamizadeh, V. Nath, Y. Tang, D. Yang, H. Roth, D. Xu, Swin unetr: Swin transformers for semantic segmentation of brain tumors in mri images, BrainLes@MICCAI (2022).

Z. Liu, Y. Lin, Y. Cao, H. Hu, Y. Wei, Z. Zhang, S. Lin, B. Guo, Swin transformer: Hierarchical vision transformer using shifted windows, IEEE International Conference on Computer Vision (2021).

A. Gu, T. Dao, Mamba: Linear-time sequence modeling with selective state spaces, arXiv.org (2023).

Y. Liu, Y. Tian, Y. Zhao, H. Yu, L. Xie, Y. Wang, Q. Ye, Y. Liu, Vmamba: Visual state space model, Neural Information Processing Systems (2024a).

J. Liu, H. Yang, H.-Y. Zhou, Y. Xi, L. Yu, Y. Yu, Y. Liang, G. Shi, S. Zhang, H. Zheng, Swin-umamba: Mamba-based unet with imagenet-based pretraining, International Conference on Medical Image Computing and Computer-Assisted Intervention (2024b).

A. Katharopoulos, A. Vyas, N. Pappas, F. Fleuret, Transformers are rnns: Fast autoregressive transformers with linear attention, International Conference on Machine Learning (2020).

H. Ma, X. Xia, X. Wang, X. Xiao, J. Li, M. Zheng, Mocovit: Mobile convolutional vision transformer, arXiv.org (2022).

S. Moccia, C. Fiorentino, E. Frontoni, Mask-r2cnn: a distance-field regression version of mask-rcnn, International Journal of Computer Assisted Radiology and Surgery (2021).

N. Audebert, A. Boulch, B. L. Saux, S. Lefèvre, Distance transform regression for spatially-aware deep semantic segmentation, Computer Vision and Image Understanding (2019).

L.-C. Chen, G. Papandreou, I. Kokkinos, K. Murphy, A. Yuille, Deeplab: Semantic image segmentation with deep convolutional nets, atrous convolution, and fully connected crfs, IEEE Transactions on Pattern Analysis and Machine Intelligence (2016).

C. Liao, H. Hu, H. Li, X. Ge, M. Chen, C. Li, Q. Zhu, Joint learning of contour and structure for boundary-preserved building extraction, Remote Sensing (2021).

X. Wang, R. B. Girshick, A. Gupta, K. He, Non-local neural networks, 2018 IEEE/CVF Conference on Computer Vision and Pattern Recognition (2017).

J. Dai, H. Qi, Y. Xiong, Y. Li, G. Zhang, H. Hu, Y. Wei, Deformable convolutional networks, IEEE International Conference on Computer Vision (2017).

F. Chollet, Xception: Deep learning with depthwise separable convolutions, Computer Vision and Pattern Recognition (2016).

Y. Shen, S. Zhu, T. Yang, C. Chen, D. Pan, J. Chen, L. Xiao, Q. Du, Bdanet: Multiscale convolutional neural network with cross-directional attention for building damage assessment from satellite images, IEEE Transactions on Geoscience and Remote Sensing (2021).

A. Vaswani, N. Shazeer, N. Parmar, J. Uszkoreit, L. Jones, A. N. Gomez, L. Kaiser, I. Polosukhin, Attention is all you need, Neural Information Processing Systems (2017).

X. Dong, J. Bao, D. Chen, W. Zhang, N. Yu, L. Yuan, D. Chen, B. Guo, Cswin transformer: A general vision transformer backbone with cross-shaped windows, Computer Vision and Pattern Recognition (2021).

Z. Zhou, M. R. Siddiquee, N. Tajbakhsh, J. Liang, Unet++: A nested u-net architecture for medical image segmentation, DLMIA/ML-CDS@MICCAI (2018).

S. Roy, G. Koehler, C. Ulrich, M. Baumgartner, J. Petersen, F. Isensee, P. Jaeger, K. H. Maier-Hein, Mednext: Transformer-driven scaling of convnets for medical image segmentation, International Conference on Medical Image Computing and Computer-Assisted Intervention (2023).

Z. Huang, H. Wang, Z. Deng, J. Ye, Y. Su, H. Sun, J. He, Y. Gu, L. Gu, S. Zhang, Stu-net: Scalable and transferable medical image segmentation models empowered by large-scale supervised pre-training, arXiv.org (2023).

J. Ma, Z. Wei, Y. Zhang, Y. Wang, R. Lv, C. Zhu, G. Chen, J. Liu, C. Peng, L. Wang, How distance transform maps boost segmentation cnns: An empirical study, International Conference on Medical Imaging with Deep Learning (2020).

H. Kervadec, J. Bouchtiba, C. Desrosiers, E. Granger, J. Dolz, I. B. Ayed, Boundary loss for highly unbalanced segmentation, International Conference on Medical Imaging with Deep Learning (2018).

X. Wang, S. Liu, N. Yang, G. Ning, L. Ma, H. Zhang, H. Liao, A less supervised automatic delineation method for intracranial germ cell tumor radiotherapy targets, IEEE International Symposium on Biomedical Imaging (2022).

Y. Gao, M. Zhou, D. Liu, Z. Yan, S. Zhang, D. N. Metaxas, A data-scalable transformer for medical image segmentation: Architecture, model efficiency, and benchmark (2022).

Žan Klaneček, T. Wagner, Y.-K. Wang, L. Cockmartin, N. Marshall, B. Schott, A. Deatsch, A. Studen, K. Hertl, K. Jarm, Uncertainty estimation for deep learning-based pectoral muscle segmentation via monte carlo dropout, Physics in Medicine and Biology (2023).