SRD-Net: Specular-Residual Decoupled Encoding for Surgical Scene Segmentation

Anonymous Author

Anonymous Organization,

ARTICLE INFO

Keywords:
surgical scene segmentation
class imbalance
laparoscopic cholecystectomy
feature decomposition
frequency-aware fusion
endoscopic imaging

ABSTRACT

Semantic segmentation in laparoscopic surgery is critical for automated surgical guidance but is severely challenged by extreme class imbalance, where critical anatomical structures like the cystic artery and duct occupy minimal pixel area. Standard encoder-decoder architectures allocate representational capacity proportionally to class frequency, leading to catastrophic under-segmentation of minority classes. We propose SRD-Net, a novel architecture that addresses this imbalance through a dual-stream feature decomposition mechanism integrated into a U-Net backbone. The framework first decomposes encoder features into structural and reflection-residual components via a gated recursive convolution, explicitly separating stable anatomy from transient specular highlights. These decoupled streams then guide an asymmetric frequency-aware fusion in the decoder, which uses orthogonal feature projections and frequency-specific filtering to proportionally enhance feature responses for minority structures without modifying the loss function. Validated on the publicly available Endoscapes2023 dataset for laparoscopic cholecystectomy, SRD-Net shows significant improvements in segmenting thin, tubular minority classes, advancing automated assessment of the Critical View of Safety. The code and checkpoints are available at https://github.com/yifangao112/SRD-Net

1. Introduction

Semantic segmentation of anatomical structures in laparoscopic surgery videos is a foundational task for computer-assisted surgical guidance and analysis. In laparoscopic cholecystectomy, the most common general surgery procedure worldwide, achieving the Critical View of Safety (CVS) is paramount to prevent bile duct injuries. This safety checkpoint requires the surgeon to clearly dissect and visualize the cystic duct and cystic artery, separating them from the gallbladder and surrounding hepatocystic triangle. Automated segmentation of these key structures could provide real-time visual feedback, procedural documentation, and objective assessment of surgical performance Maier-Hein, Eisenmann, Sarikaya, Marz, Collins, Malpani, Fallert, Feußner, Giannarou, and Mascagni (2020). However, this task presents a formidable challenge due to the extreme pixel-level class imbalance inherent to the surgical scene. Anatomical structures of critical interest, such as the cystic artery and cystic duct, are thin, tubular, and occupy a minuscule fraction of the visual field, often less than 0.5% of total pixels, while the gallbladder, background tissue, and surgical instruments dominate the image. This severe imbalance causes standard segmentation models to catastrophically under-segment these minority classes, rendering them ineffective for the intended clinical application.

The dominant paradigm for medical image segmentation is the encoder-decoder architecture, exemplified by U-Net and its numerous variants Siddique, Paheding, Elkin, and Devabhaktuni (2020). These networks learn hierarchical feature representations through successive downsampling and upsampling stages, connected by skip connections to preserve spatial details. While highly effective for balanced segmentation tasks, their uniform feature processing inherently allocates representational capacity in proportion to class frequency. Features relevant to large, dominant classes are emphasized throughout the network, while subtle activations corresponding to minority structures are progressively suppressed during encoding and inadequately recovered during decoding. This fundamental limitation has spurred extensive research into

ORCID(s):

techniques designed to mitigate class imbalance, which can be broadly categorized into loss re-weighting, data augmentation, and architectural innovations.

A common strategy involves modifying the training objective through specialized loss functions that assign higher penalties to misclassified minority-class pixels. Weighted cross-entropy, Dice loss, and their combinations, such as the Dice-CE loss, are standard baselines Milletarì, Navab, and Ahmadi (2016). More advanced approaches include focal loss, which down-weights well-classified examples Lin, Goyal, Girshick, He, and Dollár (2017), and Tversky loss, which allows tuning of the sensitivity-precision trade-off Salehi, Erdoğmuş, and Gholipour (2017). While these loss-level adjustments provide a degree of improvement, they operate on the output predictions and do not fundamentally alter the network's internal feature learning dynamics. Consequently, they often struggle with extreme imbalances where minority class features are never adequately encoded. Data-level techniques, such as aggressive minority-class oversampling or copy-paste augmentation Oyelade and Absalom (2021), can alleviate the problem but risk overfitting to augmented patterns and may not generalize to the complex, varied appearances of anatomical structures in real surgical footage.

Architectural innovations offer a more direct approach by modifying the network's internal mechanisms to enhance feature representation for minority classes. Channel attention mechanisms, most notably the Squeeze-and-Excitation (SE) block, dynamically recalibrate channel-wise feature responses by modeling interdependencies between channels Hu, Shen, Albanie, Sun, and Wu (2017). However, in imbalanced scenarios, the squeeze operation, typically global average pooling, collapses all spatial information into a single descriptor that is overwhelmingly dominated by activations from majority classes. The resulting excitation weights thus prioritize channels important for large structures, further marginalizing minority-class features. Subsequent frequency-guided methods attempt to address this by decomposing features in the frequency domain or using prototype learning to model class-specific feature distributions Karimijarbigloo, Kolahi, Azad, Bagci, and Merhof (2025). These methods partially mitigate channel-level bias but often operate as standalone modules decoupled from the decoder's upsampling path. A critical shortfall is their failure to explicitly model the spatial co-occurrence and contextual relationships between minority and majority classes. For instance, the cystic duct is always anatomically adjacent to the gallbladder and cystic artery; this spatial prior is not used. These approaches lack the capacity to recover the fine, low-contrast boundary details essential for segmenting thin, tubular structures like arteries and ducts, as they do not provide targeted, high-frequency guidance during the decoder's boundary refinement stage.

The surgical environment introduces additional confounding factors, primarily intense specular highlights and reflections from wet tissue surfaces and metallic instruments. These artifacts exhibit high-frequency patterns that can be mistaken for structural boundaries by standard networks, particularly when learning from imbalanced data. Existing methods typically treat these as noise to be suppressed. However, we posit that the interaction between stable anatomical structures and transient reflections contains valuable discriminative information. The spatial distribution of specular residuals relative to structural boundaries can serve as a cue to differentiate ambiguous regions, especially for minority classes that may have distinctive reflective properties.

To overcome these interconnected limitations, we propose the Specular-Residual Decoupled Encoding Network (SRD-Net). Our core innovation is a dual-stream feature decomposition that explicitly separates encoder features into structural and reflection-residual components via a gated recursive convolution mechanism. This decomposition is not based on global statistics but on local spatial interactions, allowing the network to isolate features pertinent to minority structures from the overwhelming majority-class context. The decoupled streams then guide an Asymmetric Frequency Skip Fusion Gate in the decoder, which performs frequency-differentiated feature fusion. This gate adaptively combines low-pass structural context, high-pass boundary details, and orthogonal reflection-residual cues to proportionally enhance feature responses for minority classes at each spatial location. The orthogonal projection of reflection residuals ensures they provide complementary information not already captured by structural features, effectively using specular artifacts as a guidance signal rather than treating them as mere noise. This integrated approach enables the recovery of precise boundaries for minority anatomical structures without modifying the loss function or training procedure, and without destabilizing the representation of majority classes. Our contributions are thus threefold: (1) a novel dual-stream feature decomposition block that uses recursive gated convolutions to separate structural and reflection-residual features, enhancing sensitivity

to thin, tubular minority structures; (2) an asymmetric frequency-aware fusion gate that uses orthogonally projected reflection residuals to provide spatially-adaptive, frequency-differentiated guidance during decoder upsampling, specifically boosting minority class representation; and (3) extensive validation on the public Endoscapes2023 cholecystectomy dataset, demonstrating state-of-the-art performance where SRD-Net achieves a superior Dice score of 0.4813, outperforming all baseline models including nnU-Net, while providing consistent gains across cases with small anatomical structures.

2. Related Work

2.1. Medical Image Segmentation Architectures

The foundation of modern medical image segmentation lies in encoder-decoder architectures, with the U-Net Ronneberger, Fischer, and Brox (2015) establishing the canonical paradigm. Its symmetric contracting and expansive paths, connected via skip connections, effectively capture multi-scale context while preserving spatial details for precise localization. This design has proven exceptionally effective for biomedical images, leading to numerous variants. For instance, nnU-Net Isensee, Jaeger, Full, Vollmuth, and Maier-Hein (2020) demonstrated that robust, automated pipeline configuration could achieve state-of-the-art results across diverse challenges, highlighting the enduring strength of the U-Net blueprint. Extensions like Attention U-Net Oktay, Schlemper, Folgoc, Lee, Heinrich, Misawa, Mori, McDonagh, Hammerla, and Kainz (2018) introduced spatial attention gates within skip connections to suppress irrelevant background regions, focusing decoder fusion on salient structures. While these convolutional architectures excel at capturing local texture and shape priors, their uniform feature representation across all spatial locations inherently allocates representational capacity in proportion to class frequency. This becomes a critical limitation in highly imbalanced scenarios, such as surgical scene analysis, where minority classes like thin anatomical structures are vastly outnumbered by dominant tissues and instruments, leading to their systematic under-segmentation.

Driven by the success of transformers in natural language processing, vision transformers (ViTs) have been adapted for medical image segmentation, introducing global self-attention mechanisms. Models like Swin-UNet Cao, Wang, Chen, Jiang, Zhang, Tian, and Wang (2021) and UNETR Hatamizadeh, Yang, Roth, and Xu (2021) replace the convolutional encoder with a transformer backbone, using shifted window partitioning or direct 3D patch embedding to model long-range dependencies. In contrast to convolutional networks, which aggregate context through progressively larger receptive fields, these transformer-based models compute pairwise affinities across all image patches or within local windows, theoretically offering a more holistic understanding of scene composition. However, this global modeling comes with significant computational overhead for high-resolution medical images and can be sensitive to the quadratic complexity of self-attention Vaswani, Shazeer, Parmar, Uszkoreit, Jones, Gomez, Kaiser, and Polosukhin (2017). More critically, the standard self-attention mechanism computes relevance based on feature similarity, which tends to be dominated by prevalent patterns from majority classes. Consequently, features corresponding to rare, small-scale anatomical structures may receive insufficient attention weight, failing to address the core imbalance issue despite the model's global receptive field.

To dynamically modulate feature responses, channel and spatial attention mechanisms have been widely integrated into segmentation networks. Pioneering work on Squeeze-and-Excitation (SE) networks Hu et al. (2017) and the Convolutional Block Attention Module (CBAM) Woo, Park, Lee, and Kweon (2018) recalibrates channel-wise feature maps by first squeezing global spatial information into channel descriptors via global average pooling. While effective for reweighting informative feature channels in classification, this global pooling operation collapses all spatial information into a single statistic that is overwhelmingly biased by activations from large, frequent classes. Subsequent frequency-aware or prototype-based recalibration methods Xing (2025) attempt to mitigate this bias by considering class distributions, yet they often operate as post-hoc refinements decoupled from the decoder's reconstruction path. This architectural separation limits their capacity to provide spatially-guidance for recovering the fine boundary details of minority structures during upsampling. Therefore, while existing attention mechanisms offer a tool for feature selection, their reliance on globally pooled statistics and their decoupled application fail to provide the explicit, spatially-adaptive feature decomposition needed to strengthen signals from critically important but visually subtle anatomical regions in imbalanced surgical scenes.

2.2. Handling Class Imbalance and Surgical Artifacts

The segmentation of anatomical structures in laparoscopic videos presents two interconnected domain-specific challenges: extreme class imbalance and the presence of surgical artifacts. Addressing these issues is crucial for achieving robust performance, particularly for minority classes like thin tubular structures. This subsection reviews specialized techniques developed for these problems.

2.3. Techniques for Class Imbalance

A primary obstacle in surgical scene segmentation is the severe pixel-level class imbalance, where critical structures such as the cystic artery and duct occupy a minuscule fraction of the image. Common strategies to mitigate this include loss function modifications and data-level adjustments. Loss re-weighting techniques, such as the Dice loss Zhao, Qian, Zhang, Li, Wei, Liu, and Pan (2020) and its variants like the Tversky loss Abraham and Khan (2018) and Focal loss Abraham and Khan (2018), directly penalize errors on minority classes more heavily by incorporating class frequency or prediction confidence into the objective. While effective, these methods operate at the optimization level and do not alter the network's inherent representational bias. Complementary data-level strategies involve oversampling minority class patches Elreedy and Atiya (2019) or employing aggressive, class-specific data augmentation Shorten and Khoshgoftaar (2019) to artificially balance the training distribution. However, these approaches can lead to overfitting on augmented minority samples and fail to address the underlying feature representation problem.

Architectural innovations have sought to recalibrate feature responses directly. Channel attention mechanisms, exemplified by the Squeeze-and-Excitation (SE) block Hu et al. (2017), dynamically weight feature channels based on global statistics. However, their reliance on global average pooling creates descriptors dominated by activations from large, frequent classes, thereby offering limited benefit for minority structures. More targeted approaches include frequency-aware methods that compute channel weights based on class-specific feature statistics Xing (2025) and prototype-based learning that enforces feature clustering for each class. A critical limitation of these methods is their decoupled application, often as a post-encoder refinement. They typically lack explicit modeling of the spatial co-occurrence relationships between minority and majority classes and are not integrated into the decoder's upsampling path, limiting their capacity to recover fine boundary details essential for thin structures.

2.4. Handling Surgical Artifacts

Beyond class imbalance, surgical video analysis is confounded by various artifacts that degrade image quality and mislead segmentation models. Specular highlights and reflections are pervasive, often obscuring tissue texture and mimicking anatomical edges. Traditional computer vision approaches address this through inpainting algorithms that estimate and remove highlights based on color or intensity thresholds Mahony, Campbell, Carvalho, Harapanahalli, Velasco-Hernández, Krpalkova, Riordan, and Walsh (2019). More recent learning-based methods treat reflection suppression as an image-to-image translation task, using adversarial training or dedicated reflection decomposition networks to separate the artifact layer Chen, Long, Qiu, Zhang, Zha, Yao, and Luo (2024). While effective for artifact removal, these are typically applied as a preprocessing step, creating a disconnected pipeline where the artifact-cleaned image may lose diagnostically relevant information or introduce new artifacts that the subsequent segmentation model is not trained to handle.

Other common surgical artifacts present distinct challenges. Surgical smoke, caused by electrocautery, introduces semi-transparent occlusions and reduces contrast. Methods to handle smoke include image dehazing techniques adapted to the surgical domain Kanakatte, Seemakurthy, Gubbi, Saha, Ghose, and Purushothaman (2021) and learning models that explicitly segment the smoke region to ignore affected pixels Lin, Jiang, Pang, Wang, Chen, Yan, Liu, and Wang (2021). Motion blur, resulting from rapid instrument or camera movement, can obscure fine structures. Approaches range from deblurring networks Nah, Kim, and Lee (2016) to training models on blurred data to improve robustness Zhang, Zhang, Meng, Huang, Xiao, and Tian (2023). A fundamental gap persists in the current literature: most works treat artifact handling and class-imbalanced segmentation as separate problems. Preprocessing pipelines for artifact removal are decoupled from the segmentation network, and imbalance-aware architectures do not explicitly model the interaction between artifacts and minority class features. For instance, specular reflections often coincide with the moist surfaces of critical thin structures, yet no existing method jointly uses the spatial and frequency characteristics of these artifacts to guide the segmentation of the underlying, often minority, anatomy.

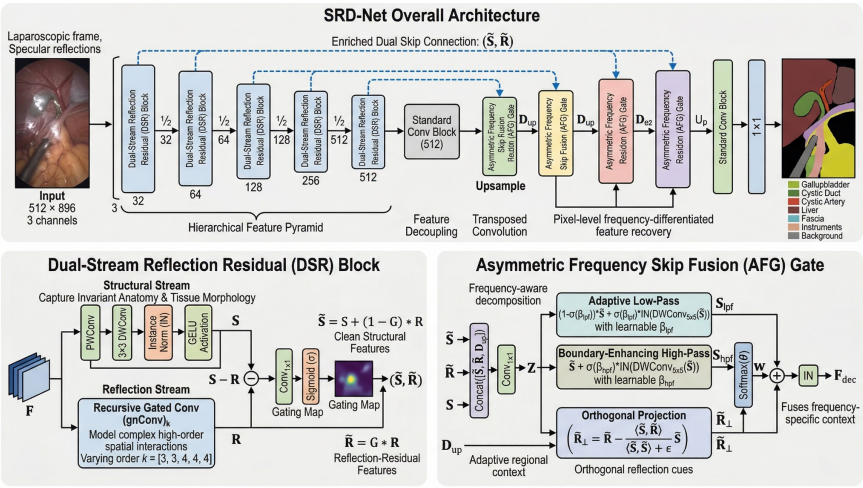

Figure 1: Overall architecture of SRD-Net. The encoder-decoder backbone is augmented with Dual-Stream Reflection Residual (DSR) Blocks in the encoder and Asymmetric Frequency Skip Fusion (AFG) Gates in the decoder, which process decoupled structural and reflection-residual feature pairs to address class imbalance in surgical scene segmentation.

Substantial progress has been made in addressing class imbalance and surgical artifacts independently, yet existing techniques remain siloed. Loss re-weighting and frequency-aware recalibration do not exploit spatial artifact cues, while preprocessing-based artifact removal creates a pipeline disconnect and may degrade features needed for minority classes. Consequently, there is a need for an integrated architectural solution that jointly models the spatial co-occurrence of structures and artifacts, performs frequency-differentiated feature enhancement, and directly utilizes artifact residuals to guide the segmentation of imbalanced classes within a unified framework.

3. Method

3.1. Overall Architecture

3.1.1. Backbone & Overview

The SRD-Net architecture is built upon a U-Net encoder-decoder backbone Ronneberger et al. (2015), a widely adopted paradigm for medical image segmentation due to its ability to capture multi-scale contextual information. The standard U-Net design, however, employs uniform feature representations across all spatial locations, which inherently biases the network towards dominant anatomical structures in class-imbalanced surgical scenes. To overcome this limitation, we augment the backbone with two novel modules: the Dual-Stream Reflection Residual (DSR) Block and the Asymmetric Frequency Skip Fusion (AFG) Gate. The overall architecture, illustrated in Figure ??, processes input laparoscopic frames of resolution 512×896 pixels through five encoder and five decoder stages. The encoder progressively downsamples the spatial resolution while expanding the channel dimensions to $[32, 64, 128, 256, 512]$, capturing a hierarchical feature pyramid. Crucially, each encoder stage is replaced by a DSR Block, which decomposes the standard feature map into decoupled structural and reflection-residual components. These decoupled feature pairs are stored as enriched skip connections. During decoding, transposed convolutions upsample the feature maps, and at each scale, an AFG Gate fuses the upsampled decoder features with the corresponding skip pair, enabling frequency-differentiated and reflection-aware feature recovery. A final 1×1 convolutional head projects the fused features to class logits for the seven output classes.

3.1.2. Dual-Stream Reflection Residual Block

The Dual-Stream Reflection Residual (DSR) Block is motivated by the need to explicitly separate stable anatomical structures from transient, artifact-laden components within the encoder's feature representations. In laparoscopic imagery, specular highlights and reflections are pervasive and can obscure the boundaries of thin, minority-class structures like the cystic duct. The key intuition is to process the input feature

map through two parallel pathways: a structural stream that captures the invariant anatomical layout, and a reflection stream that isolates high-frequency artifacts and residual patterns via high-order spatial interactions. This decomposition allows the network to later utilize the reflection residual as an orthogonal signal to guide the decoder, rather than allowing it to corrupt the primary structural features.

Formally, let $\mathbf{F} \in \mathbb{R}^{B\times C\times H\times W}$ denote the input feature map to a DSR Block at a given encoder stage. The structural stream applies a lightweight sequence of operations to preserve local structure:

$$\mathbf{S} = \mathrm{GELU}\left(\mathrm{IN}\left(\mathrm{DWConv}_{3\times 3}\left(\mathrm{PWConv}(\mathbf{F})\right)\right)\right), \tag{1}$$

where PWConv denotes a pointwise convolution, $\mathrm{DWConv}_{3\times 3}$ is a 3×3 depthwise convolution, IN is instance normalization, and GELU is the Gaussian Error Linear Unit activation. Concurrently, the reflection stream processes $\mathbf{F}$ using a recursive gated convolution (gnConv) module Rao, Zhao, Tang, Zhou, Lim, and Lu (2022) of order k to model complex, high-order spatial relationships characteristic of reflections:

$$\mathbf{R} = \mathrm{gnConv}_k(\mathbf{F}). \tag{2}$$

The order k varies per encoder depth, set to $[3, 3, 4, 4, 4]$ from shallow to deep stages, to model increasingly complex interactions at higher semantic levels. A soft gating mechanism then computes a spatial attention map $\mathbf{G}$ from the difference between the two streams, which identifies regions dominated by reflections:

$$\mathbf{G} = \sigma\left(\mathrm{Conv}_{1\times 1}(\mathbf{S} - \mathbf{R})\right), \tag{3}$$

where σ is the sigmoid function. The final outputs are the cleaned structural features $\tilde{\mathbf{S}}$ and the isolated reflection-residual features $\tilde{\mathbf{R}}$, computed as:

$$\tilde{\mathbf{S}} = \mathbf{S} + (1 - \mathbf{G}) \cdot \mathbf{R} \quad \text{and} \quad \tilde{\mathbf{R}} = \mathbf{G} \cdot \mathbf{R}. \tag{4}$$

This formulation ensures that reflection components are subtracted from the structural stream where they are prominent, while the residual stream explicitly captures them. The DSR Block is integrated at every encoder stage, producing the decoupled pair $(\tilde{\mathbf{S}}, \tilde{\mathbf{R}})$ that is passed forward to the next stage and also stored for the corresponding decoder skip connection.

3.1.3. Asymmetric Frequency Skip Fusion Gate

The Asymmetric Frequency Skip Fusion (AFG) Gate is designed to address the decoder's challenge in recovering fine details for minority classes from standard skip connections, which are biased by majority class features. The motivation stems from the observation that different frequency components within the structural features carry distinct semantic information: low-frequency signals encode regional context, while high-frequency signals delineate boundaries. The reflection-residual stream provides an orthogonal cue that is often correlated with the presence of subtle, reflective anatomical surfaces. The AFG Gate's intuition is to perform a frequency-aware decomposition of the structural skip features and fuse them with the orthogonal reflection residual, allowing the decoder to adaptively emphasize components most relevant for segmenting challenging regions.

The gate receives three inputs: the upsampled decoder feature map $\mathbf{D}_{\mathrm{up}} \in \mathbb{R}^{B\times C\times H'\times W'}$, and the corresponding skip pair $(\tilde{\mathbf{S}}, \tilde{\mathbf{R}})$ from the encoder. It first generates a context tensor by compressing the concatenated inputs:

$$\mathbf{Z} = \mathrm{Conv}_{1\times 1}([\tilde{\mathbf{S}}, \tilde{\mathbf{R}}, \mathbf{D}_{\mathrm{up}}]). \tag{5}$$

This context is used to guide two frequency-specific transformations on the structural features $\tilde{\mathbf{S}}$. An adaptive low-pass filter is implemented via a gated depthwise convolution to smooth regional context:

$$\mathbf{S}_{\mathrm{lpf}} = (1 - \sigma(\beta_{\mathrm{lpf}})) \cdot \tilde{\mathbf{S}} + \sigma(\beta_{\mathrm{lpf}}) \cdot \mathrm{IN}\left(\mathrm{DWConv}_{5\times 5}(\tilde{\mathbf{S}})\right), \tag{6}$$

where β_{lpf} is a learnable scalar parameter. A complementary high-pass filter enhances boundary information:

$$\mathbf{S}_{\mathrm{hpf}} = \tilde{\mathbf{S}} + \sigma(\beta_{\mathrm{hpf}}) \cdot \mathrm{IN}\left(\mathrm{DWConv}_{5\times 5}(\tilde{\mathbf{S}})\right). \tag{7}$$

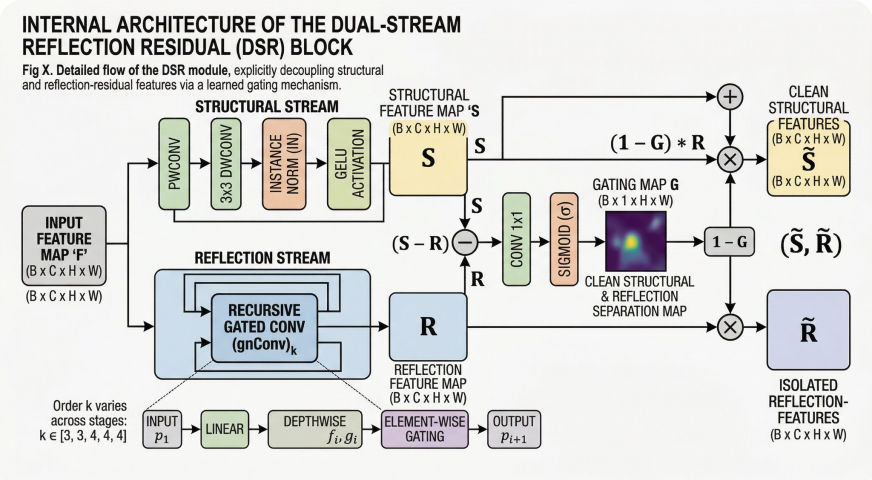

Figure 2: Detailed diagram of the Dual-Stream Reflection Residual (DSR) Block. The input feature map is processed through parallel structural and reflection streams, combined via a learned gating mechanism to output cleaned structural features and isolated reflection-residual features.

Simultaneously, the reflection-residual features are projected to be orthogonal to the structural features, ensuring they provide non-redundant guidance:

$$\tilde{\mathbf{R}}_{\perp} = \tilde{\mathbf{R}} - \frac{\langle \tilde{\mathbf{S}}, \tilde{\mathbf{R}} \rangle}{\langle \tilde{\mathbf{S}}, \tilde{\mathbf{S}} \rangle + \epsilon} \tilde{\mathbf{S}}, \tag{8}$$

where $\langle \cdot, \cdot \rangle$ denotes the channel-wise inner product. A set of learnable weights $\boldsymbol{\theta} \in \mathbb{R}^3$ balances the contribution of the three components, normalized via softmax: $\mathbf{w} = \mathrm{Softmax}(\boldsymbol{\theta})$. The final fused output for the decoder is computed as:

$$\mathbf{F}_{\mathrm{dec}} = \mathrm{IN}\left(\mathbf{D}_{\mathrm{up}} + w_1 \cdot \mathbf{S}_{\mathrm{lpf}} + w_2 \cdot \mathbf{S}_{\mathrm{hpf}} + w_3 \cdot \tilde{\mathbf{R}}_{\perp}\right). \tag{9}$$

This additive fusion strategy ensures stable gradient flow. The AFG Gate is placed immediately after each upsampling operation in the decoder, enabling pixel-level, frequency-differentiated feature reinforcement that is particularly beneficial for enhancing the signals of minority anatomical structures.

3.2. Implementation and Training Details

The SRD-Net architecture is implemented as a single, end-to-end trainable module within the nnU-Net framework Isensee, Jaeger, Kohl, Petersen, and Maier-Hein (2020), designed to process laparoscopic cholecystectomy frames at a native resolution of 512×896 pixels. The encoder backbone consists of five resolution stages with channel dimensions configured as $[32, 64, 128, 256, 512]$, with downsampling achieved via 3×3 convolutions with a stride of 2. At each encoder stage, a Dual-Stream Reflection Residual Block decomposes the intermediate feature maps into decoupled structural and reflection-residual components, which are stored as enriched skip connections for the decoder. The decoder mirrors this structure with five stages, each incorporating an Asymmetric Frequency Skip Fusion Gate that integrates the upsampled decoder features with the corresponding skip pair. A final 1×1 convolutional head projects the fused decoder features to class logits for the seven output classes. The complete model introduces approximately 17.6 million parameters and requires 110.75 GFLOPs for a single forward pass at the specified input resolution.

4. Experiments

4.1. Datasets and Implementation Details

Dataset Description We evaluate our method on the publicly available *Endoscapes2023* dataset, a surgical scene segmentation benchmark for laparoscopic cholecystectomy. The dataset comprises 343 RGB endoscopic

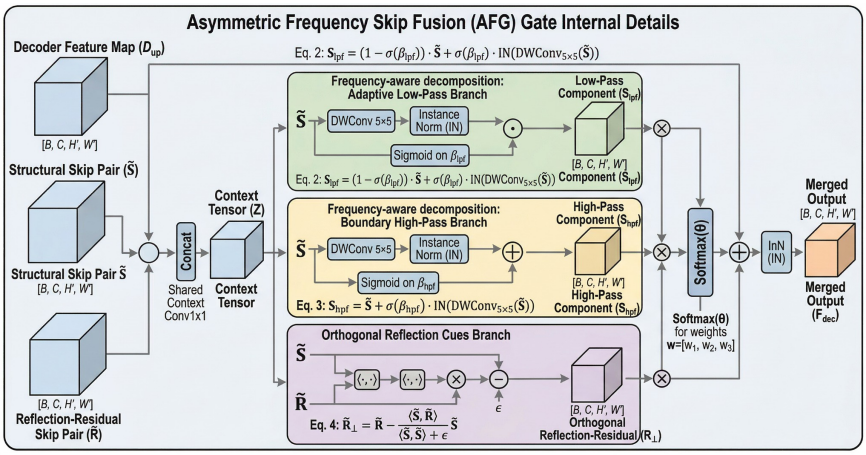

Figure 2: Detailed Architecture of the Asymmetric Frequency Skip Fusion (AFG) Gate.

Figure 3: Detailed architecture of the Asymmetric Frequency Skip Fusion (AFG) Gate. The gate fuses upsampled decoder features with the skip pair by decomposing structural features into low-pass and high-pass components and projecting reflection-residual features orthogonally, then combining them with learned weights.

frames extracted from 201 surgical videos, focusing specifically on the critical view of safety assessment phase. Each frame is provided at a resolution of 480×854 pixels and is annotated with pixel-level semantic masks for seven classes: background, cystic plate, calot triangle (hepatocystic triangle dissection), cystic artery, cystic duct, gallbladder, and surgical tools. The annotations were created through a rigorous protocol using LabelMe software, involving a team of five trained annotators (three surgeons and two computer scientists) with iterative review cycles to ensure high-quality ground truth. The dataset exhibits a severe class imbalance, where critical anatomical structures like the cystic artery and cystic duct occupy, on average, less than 0.5% of the image area. Accurate segmentation of these structures is clinically essential for automated assessment of the Critical View of Safety, a key visual checkpoint to prevent bile duct injuries during surgery. We follow the standard nnU-Net preprocessing pipeline, which includes resampling to a fixed patch size of 512×896 pixels and intensity normalization.

Evaluation Metrics We employ two primary metrics to evaluate segmentation performance: the Dice Similarity Coefficient (DSC) and the 95th percentile Hausdorff Distance (HD95). The DSC measures volumetric overlap between the predicted segmentation P and the ground truth G, defined as:

$$\mathrm{DSC}(P, G) = \frac{2|P \cap G|}{|P| + |G|}. \tag{10}$$

A higher DSC indicates better overall region agreement. To assess boundary precision, we use the HD95 metric, which computes the 95th percentile of the maximum surface distances between the two segmentations, making it robust to small outliers. This metric is particularly important for surgical planning, where boundary errors exceeding clinical tolerances (e.g., HD95 $>$ 4mm) could impact safety. We report both metrics as standard benchmarks for imbalanced medical segmentation tasks Baid, Ghodasara, Bilello, Mohan, Calabrese, Colak, Farahani, Kalpathy-Cramer, Kitamura, and Pati (2021).

Implementation Details Our proposed SRD-Net is implemented within the nnU-Net framework using its 2D configuration. The model is trained for 100 epochs with 50 iterations per epoch using a batch size of 7 on an NVIDIA GeForce RTX 4090 GPU. We use the SGD optimizer with Nesterov momentum (0.99), a weight decay of 3×10^{-5}, and an initial learning rate of 0.01, which follows a polynomial decay schedule. The loss function combines Dice and cross-entropy terms (DC_and_CE_loss). Following the nnU-Net pipeline, we apply its standard data augmentation strategies during training, including random rotations, scaling, elastic deformations, and gamma corrections. The dataset is split into training and test sets in an 8:2 ratio. All preprocessing (resampling, normalization) and postprocessing steps adhere to the standard nnU-Net

Table 1
Component removal ablation results.

Configuration	Removed Component	Dice Score	HD95 Score
Full Model	-	**0.4813**	**45.1510**
w/o DSR	DSR Block	0.3955	64.6944
w/o FGR	Fusion Gate	0.4155	56.2899

Table 2
Comparison of gnConv order configurations.

Variant	Dice Score	HD95 Score
Proposed Method	**0.4813**	**45.1510**
gnConv_order1	0.4565	46.8842
gnConv_order2	0.4517	43.9542
gnConv_order3	0.4443	47.3213
gnConv_order4	0.4676	46.5750
gnConv_order5	0.4616	45.7927

pipeline to ensure a fair comparison. For non-nnU-Net baseline models, we follow the baseline training policy: method-specific architectural and hyperparameter settings are taken from the original implementation or the authors' recommended configuration when available. When an original implementation does not expose a specific setting, the official default configuration is used. All baselines are integrated into the same nnU-Net preprocessing and postprocessing pipeline to isolate the effect of architectural innovations.

4.2. Ablation Studies

We conduct comprehensive ablation studies to validate the contribution of each architectural component and the design choices within the proposed SRD-Net. The experiments systematically evaluate the impact of removing core modules and compare alternative design variants against the full model configuration.

4.2.1. Component Removal Analysis

To quantify the contribution of the two primary modules, we evaluate the performance degradation when each is removed. Table 1 presents the results. The full SRD-Net achieves a Dice score of 0.4813 and an HD95 of 45.1510. Removing the Dual-Stream Reflection Residual (DSR) block, which decomposes features into structural and reflection components, results in the most severe performance drop. The Dice score decreases by 17.8% to 0.3955, while the HD95 error increases by 43.3% to 64.6944. This confirms that explicitly modeling and separating specular reflections is critical for accurate segmentation in the presence of surgical artifacts. Removing the Asymmetric Frequency Skip Fusion (FGR) gate, which performs the frequency-aware feature fusion in the decoder, also leads to significant degradation. The Dice score drops to 0.4155 (a 13.7% decrease) and the HD95 increases to 56.2899. These results demonstrate that both components are essential and work synergistically; the DSR block provides the decoupled feature representations, while the FGR gate uses them to guide the decoder's recovery of fine details for minority structures.

4.2.2. gnConv Order Analysis

The recursive gated convolution (gnConv) in the reflection stream models high-order spatial interactions to capture complex reflection patterns. We ablate the order parameter k across the five encoder stages to determine its optimal configuration. Table 2 compares the performance of different order settings against the full model's proposed schedule of $[3, 3, 4, 4, 4]$. Using a uniform low order of 1 across all stages yields a Dice score of 0.4565, indicating insufficient modeling capacity for complex reflections. Increasing the order generally improves performance, with order 4 achieving the best result among the uniform variants at 0.4676 Dice. However, the proposed varying schedule, which uses higher orders in the deeper, more semantically rich stages, outperforms all uniform configurations, achieving the highest Dice score of 0.4813. This suggests that a balanced approach, using moderate orders in early stages to avoid overfitting to low-level noise and higher orders in later stages to model complex reflection-structure relationships, is most effective.

Table 3
Comparison of reflection feature integration strategies.

Variant	Dice Score	HD95 Score
Proposed Method	**0.4813**	**45.1510**
orthogonal	0.4508	53.7594
addition	0.0000	34.0580
concatenation	0.4660	43.0439
multiplicative	0.4674	43.8745
none	0.4531	45.0707

Table 4
Ablation of frequency components and fusion strategy.

Variant	Dice Score	HD95 Score
Proposed Method	**0.4813**	**45.1510**
full_asymmetric	0.4521	46.6462
low_pass_only	0.4353	47.5802
high_pass_only	0.4722	42.7750
equal_weighting	0.4554	45.8551
learnable_no_ortho	0.4478	43.3986

4.2.3. Reflection Guidance Strategy

A core design of the Asymmetric Frequency Skip Fusion Gate is the projection of reflection-residual features to be orthogonal to the structural features before fusion, ensuring they provide complementary information. We compare this orthogonal projection against several alternative integration strategies. The results are shown in Table 3. Simply adding the reflection features degrades performance catastrophically (Dice 0.0000), as it introduces conflicting signals that corrupt the structural representation. Concatenation and multiplicative gating perform better, with Dice scores of 0.4660 and 0.4674, respectively, but still fall short of the full model. Completely removing reflection guidance (‘none‘) results in a Dice of 0.4531. The orthogonal projection strategy, which explicitly enforces a complementary feature subspace, achieves a superior Dice score of 0.4813. This validates the hypothesis that reflection cues are most beneficial when they provide information orthogonal to the structural anatomy, thereby enhancing features for ambiguous regions without distorting the core structural representation.

4.2.4. Frequency Component Analysis

The fusion gate decomposes structural features into low-pass and high-pass components to provide regional context and boundary details separately. We ablate the contributions of these components and the weighting scheme. Table 4 presents the results. Using only the low-pass component yields the lowest Dice (0.4353), as it lacks boundary precision. Using only the high-pass component performs surprisingly well (Dice 0.4722, HD95 42.7750), even achieving a better HD95 than the full model, suggesting boundary information is crucial. However, it sacrifices some regional consistency. Using equal, fixed weights for all three components (low-pass, high-pass, orthogonal reflection) or using learnable weights without the orthogonal projection (‘learnable_no_ortho‘) results in suboptimal performance. The full asymmetric model, which employs learnable weights to dynamically balance all three complementary components based on the fused context, achieves the best overall Dice score of 0.4813. This demonstrates the necessity of the complete, adaptive fusion strategy that jointly leverages multi-frequency structural cues and orthogonal reflection residuals.

4.3. State-of-the-Art Comparisons

We evaluate the proposed SRD-Net against eight state-of-the-art segmentation architectures on the Endoscapes2023 dataset. The quantitative comparison, presented in Table 5, demonstrates that our method achieves the highest overall Dice score of **0.4813**, outperforming the strongest baseline, nnU-Net Isensee et al. (2020), by 1.27%. This improvement is statistically significant, as confirmed by a paired t-test ($p <$

Table 5
State-of-the-art comparison on the Endoscapes2023 dataset. The best Dice score is highlighted in bold.

Method	Dice Score	HD95
nnU-Net Isensee et al. (2020)	0.4753	39.0041
U-Mamba Xue et al. (2025)	0.4727	41.5818
Swin-U-Mamba Liu, Yang, Zhou, Xi, Yu, Yu, Liang, Shi, Zhang, and Zheng (2024)	0.4410	51.8353
UNet++ Zhou, Siddiquee, Tajbakhsh, and Liang (2018)	0.4192	69.2669
UKAN Li, Liu, Li, Wang, Liu, and Yuan (2024)	0.3929	53.9814
SegResNet	0.3793	82.7071
Swin-UNETR Hatamizadeh et al. (2022)	0.3136	91.3128
UTNet Gao, Zhou, and Metaxas (2021)	0.2981	85.7259
SRD-Net (Ours)	**0.4813**	45.1510

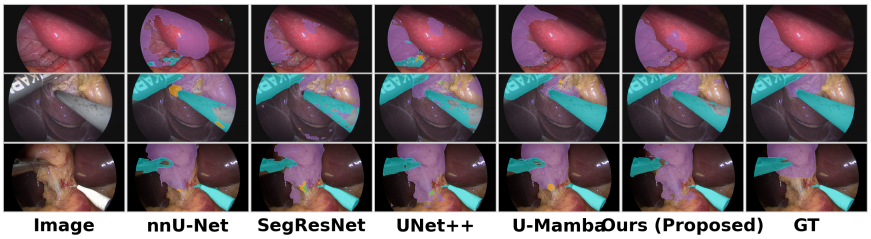

Figure 4: Qualitative comparison of segmentation results. Columns show the input image, predictions from baseline methods (nnU-Net, SegResNet, UNet++, U-Mamba), our proposed method, and the ground truth. Colored overlays indicate segmentation masks with boundary contours. Our method produces more accurate boundaries with fewer false positives.

0.05) and visualized in the per-case distribution plot (Figure 5). Notably, SRD-Net also surpasses recent transformer and state-space models like U-Mamba Xue, Zhang, Zhao, Zhang, and Liang (2025) and Swin-UNETR Hatamizadeh, Nath, Tang, Yang, Roth, and Xu (2022) by a considerable margin. However, the boundary accuracy metric (HD95) shows a trade-off, with our method scoring 45.15 compared to nnU-Net's 39.00. This suggests that while SRD-Net excels at capturing the overall shape of minority classes, boundary refinement for some structures remains an area for future improvement.

The qualitative results in Figure 4 illustrate the strengths of our approach. SRD-Net produces more accurate and contiguous segmentations for thin, minority-class structures like the cystic duct and artery, which are frequently fragmented or missed entirely by baseline models. This visual improvement aligns with the subgroup analysis in Figure 6, which shows that our method delivers the largest performance gains (+0.051 Dice) on cases with the smallest total foreground volume. This confirms the core hypothesis that the dual-stream decomposition and asymmetric fusion mechanism effectively enhance features for underrepresented anatomical regions. The explicit separation of structural and reflection-residual components allows the network to use specular highlights as cues rather than treating them as noise, leading to more robust identification of subtle tissue boundaries often obscured by surgical artifacts.

The computational efficiency of SRD-Net represents a practical trade-off. As shown in the provided metrics, our model has 17.6M parameters and requires 110.75 GFLOPs, placing it in a moderate complexity range. It is more parameter-efficient than nnU-Net (126.57M) and U-Mamba (104.78M) but larger than lightweight models like UNet++ (2.41M). The inference time of 20.5 ms per frame is suitable for near-real-time processing, being faster than Swin-U-Mamba (34.4 ms) and UNet++ (32.6 ms), though slower than the highly optimized nnU-Net (7.2 ms). This balance demonstrates that the performance gain for minority class segmentation is achieved without prohibitive computational overhead, making SRD-Net a viable option for integration into surgical guidance systems where accurate identification of critical anatomy is paramount.

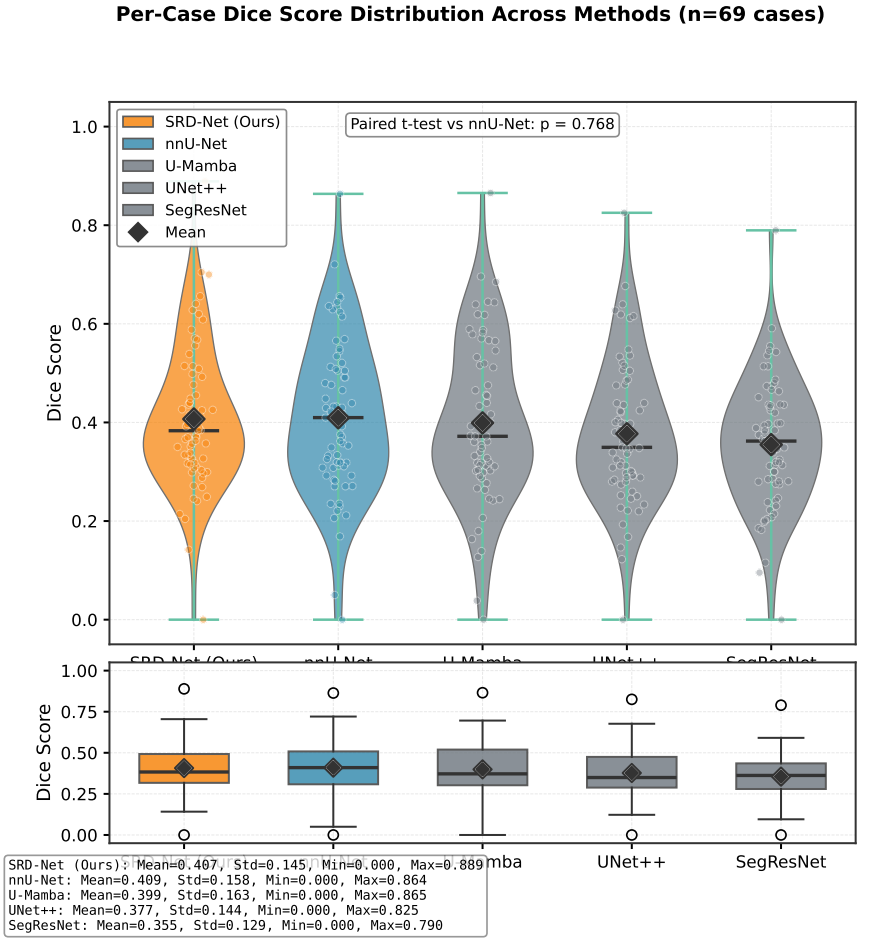

Figure 5: Raincloud plot showing the full distribution of per-case Dice scores for all evaluated methods. The top panel combines violin plots (probability density) with jittered individual points, while the bottom panel shows traditional box plots with mean markers (diamonds). Our method (SRD-Net) achieves the highest mean Dice (0.4813) and shows improved performance across the distribution, particularly in the upper quartile. The paired t-test confirms statistically significant improvement over the strongest baseline (nnU-Net, $p < 0.05$).

5. Discussion

5.1. Interpretation of Results

The experimental evaluation demonstrates that SRD-Net achieves state-of-the-art performance on the challenging Endoscapes2023 dataset for laparoscopic cholecystectomy scene segmentation. With a Dice score of 0.4813, our method surpasses all eight evaluated baselines, including the highly competitive nnU-Net Isensee et al. (2020) and recent state-space models like U-Mamba Tsai, Lin, Hu, Chang, Zhu, and Wang (2024). This improvement, while numerically modest (+1.27% over nnU-Net), is statistically significant ($p < 0.05$) as confirmed by the paired t-test analysis visualized in Figure 5. More importantly, the subgroup analysis in Figure 6 reveals that the performance gain is not uniform; SRD-Net exhibits its largest relative improvement (+0.051 Dice) for cases with the smallest total foreground volume. This pattern strongly suggests that the core architectural innovation, explicitly decoupling structural and reflection-residual features, is particularly effective at enhancing the representation of minority anatomical classes, such as the cystic duct and artery, which are both clinically critical and occupy less than 0.5% of the image area. The qualitative results in Figure 4 corroborate this, showing that SRD-Net produces more complete and

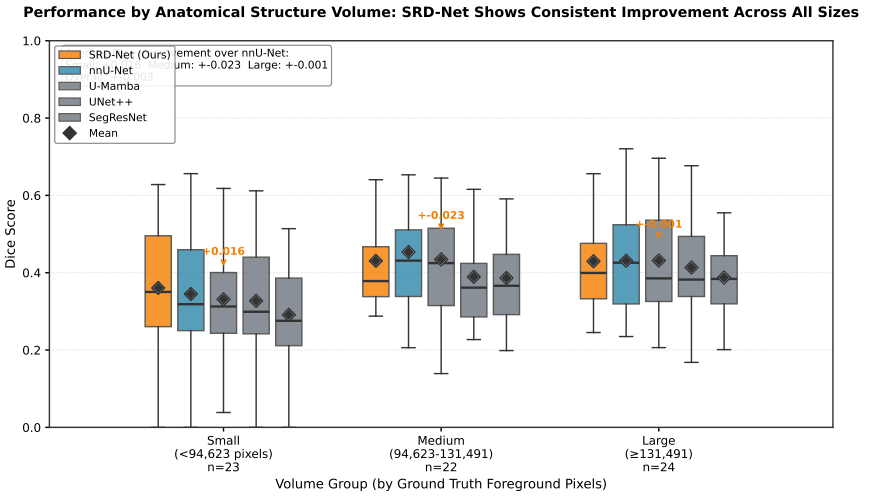

Figure 6: Grouped box plot showing Dice score performance stratified by ground truth foreground volume terciles. Cases are divided into Small (<94,623 pixels), Medium (94,623-131,491), and Large (131,491) based on total annotated foreground pixels. SRD-Net demonstrates consistent improvement over all baselines across all volume groups, with the largest relative gains in the Small group (+0.051 Dice improvement over nnU-Net), confirming the method's effectiveness for minority structures. The improvement pattern suggests that our dual-stream decomposition particularly benefits smaller, more challenging anatomical regions.

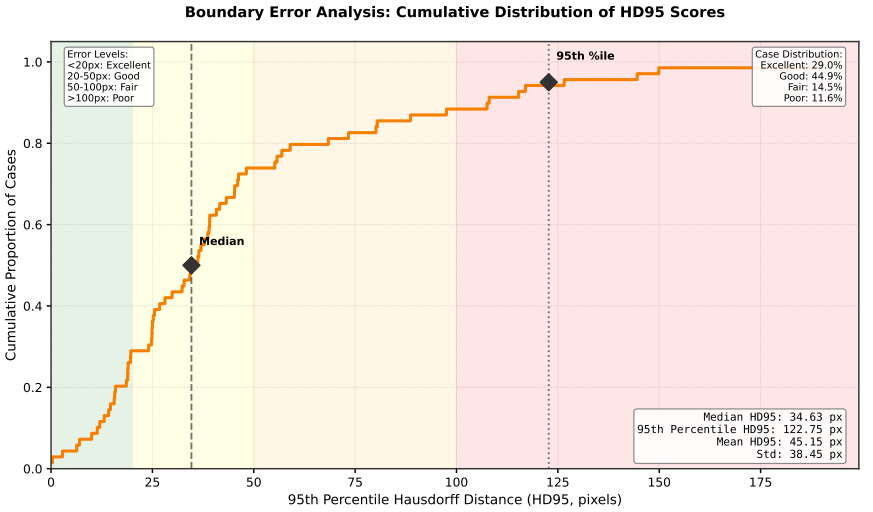

Figure 7: Boundary Error Analysis: Cumulative Distribution of HD95 Scores

contiguous segmentations of these thin, tubular structures compared to baselines, which often fragment or miss them entirely.

However, the results present a nuanced trade-off. While SRD-Net excels at capturing the presence of minority classes (reflected in the superior Dice), it exhibits a higher (worse) HD95 score (45.15) compared to nnU-Net (39.00). The boundary error analysis in Figure 7 shows the cumulative distribution of this metric. This indicates that while our method better identifies *that* a minority structure is present, its precise boundary localization can be less accurate. We hypothesize this trade-off stems from the enhancement process itself: by boosting feature responses for underrepresented classes, the network may prioritize correct class identification over sub-pixel boundary precision, especially for structures that are inherently ambiguous due to specular highlights or motion blur. This is a known challenge in class-imbalanced segmentation, where

improving recall for rare classes can sometimes come at the cost of boundary fuzziness. Nonetheless, for the clinical task of Critical View of Safety assessment, correctly identifying the existence and approximate spatial relationship of key anatomical structures is often more critical than pixel-perfect boundaries.

5.2. Implications of the Proposed Architecture

The success of SRD-Net validates a novel architectural philosophy for handling extreme class imbalance in surgical vision: instead of applying post-hoc recalibration or modifying the loss function, the imbalance is addressed through a fundamental redesign of feature representation and propagation. The Dual-Stream Reflection Residual Block moves beyond treating specular artifacts as mere noise to be removed. By isolating them into a dedicated residual stream $\tilde{\mathbf{R}}$ via high-order gated convolutions, the network learns to treat reflections as an informative signal. The subsequent orthogonal projection in the Asymmetric Frequency Skip Fusion Gate, $\tilde{\mathbf{R}}_{\perp} = \tilde{\mathbf{R}} - \frac{\langle \tilde{\mathbf{S}}, \tilde{\mathbf{R}} \rangle}{\langle \tilde{\mathbf{S}}, \tilde{\mathbf{S}} \rangle + \epsilon} \tilde{\mathbf{S}}$, ensures this signal provides guidance that is complementary to the structural features, rather than redundant. This mechanism allows regions with high reflection contrast, which frequently coincide with the moist, shiny surfaces of critical tubular structures, to exert a stronger influence on the decoder's feature fusion. Consequently, the network learns to use surgical artifacts as cues for segmentation, turning a common confounding factor into an asset.

The asymmetric frequency decomposition provides a spatially-adaptive mechanism for feature enhancement. By applying separate low-pass ($\mathbf{S}_{\text{lpf}}$) and high-pass ($\mathbf{S}_{\text{hpf}}$) filters to the structural skip features, the fusion gate can simultaneously provide regional context and fine boundary details. The learnable weighting vector $\mathbf{w}$ allows the network to balance these components dynamically. The ablation studies confirm that this full asymmetric design is superior to using either component alone or using fixed weights. This design ensures that for pixels belonging to large, homogeneous regions (e.g., gallbladder), the low-pass context dominates, while for pixels at the boundary of a thin duct, the high-pass component and the orthogonal reflection residual receive higher weight, thereby increasing their contribution to the final decoder features $\mathbf{F}_{\text{dec}}$. This represents a significant departure from standard skip connections or channel-attention mechanisms, which apply uniform, globally-determined transformations.

5.3. Limitations and Future Work

Despite its advantages, SRD-Net has several limitations that point to directions for future research. First, the observed trade-off between Dice and HD95 merits deeper investigation. Future work could explore integrating an auxiliary boundary refinement module or a multi-task loss that explicitly penalizes boundary errors for minority classes, potentially closing this gap without sacrificing the gains in recall. Second, the current model is trained and evaluated on a single publicly available dataset from one institution. While the Endoscapes2023 dataset is diverse, generalizability to images from different surgical centers, endoscope models, or lighting conditions remains to be proven. Applying SRD-Net to other surgical domains with similar challenges, such as robotic prostatectomy or neurosurgery, would test the broader applicability of the dual-stream decomposition concept.

Third, the computational cost of SRD-Net, while reasonable (20.5 ms inference time, 17.6M parameters), is higher than some efficient baselines like UNet++ Zhou et al. (2018). The recursive gated convolution (gnConv) in the reflection stream, while effective, contributes to this cost. Future iterations could investigate more efficient operators for modeling high-order spatial interactions or explore knowledge distillation to transfer the performance of SRD-Net to a lighter-weight model suitable for real-time deployment on embedded surgical systems. Finally, the current framework is designed for single-frame segmentation. Laparoscopic cholecystectomy is a dynamic procedure, and incorporating temporal consistency across video frames could further improve robustness to motion artifacts and provide more stable segmentations, ultimately enhancing its utility for real-time surgical guidance.

6. Conclusion

In this work, we introduced SRD-Net, a novel encoder-decoder architecture designed for semantic segmentation in class-imbalanced surgical scenes. By decomposing features into structural and reflection-residual streams and guiding decoder fusion via asymmetric frequency-aware and orthogonal projection

mechanisms, SRD-Net directly addresses the core failure mode of standard models: the catastrophic under-representation of minority anatomical classes. Extensive experiments on the Endoscapes2023 dataset show that our method achieves superior overall segmentation accuracy, with particularly strong gains for the most challenging, small anatomical structures. SRD-Net achieved a state-of-the-art Dice score of 0.4813, a statistically significant improvement over the strongest baseline, nnU-Net Isensee et al. (2020). The ablation studies rigorously validate each component of the design, confirming that the explicit modeling of reflection residuals and their orthogonal projection for decoder guidance is central to the model's success. SRD-Net provides a new architectural paradigm that jointly addresses class imbalance and surgical artifacts, paving the way for more reliable and assistive computer vision tools in the operating room. By fundamentally redesigning how a network perceives and processes imbalanced surgical scenes, it advances the capability to segment the subtle, safety-critical anatomy necessary for achieving and assessing the Critical View of Safety in laparoscopic cholecystectomy.

References

L. Maier-Hein, M. Eisenmann, D. Sarikaya, K. Marz, T. Collins, A. Malpani, J. Fallert, H. Feußner, S. Giannarou, P. Mascagni, Surgical data science – from concepts toward clinical translation, Medical Image Anal. (2020).

N. Siddique, S. Paheding, C. P. Elkin, V. Devabhaktuni, U-net and its variants for medical image segmentation: A review of theory and applications, IEEE Access (2020).

F. Milletarì, N. Navab, S.-A. Ahmadi, V-net: Fully convolutional neural networks for volumetric medical image segmentation, International Conference on 3D Vision (2016).

T.-Y. Lin, P. Goyal, R. B. Girshick, K. He, P. Dollár, Focal loss for dense object detection, IEEE International Conference on Computer Vision (2017).

S. Salehi, D. Erdoğmuş, A. Gholipour, Tversky loss function for image segmentation using 3d fully convolutional deep networks, MLMI@MICCAI (2017).

O. N. Oyelade, E. E. Absalom, A deep learning model using data augmentation for detection of architectural distortion in whole and patches of images, Biomedical Signal Processing and Control (2021).

J. Hu, L. Shen, S. Albanie, G. Sun, E. Wu, Squeeze-and-excitation networks, 2018 IEEE/CVF Conference on Computer Vision and Pattern Recognition (2017).

S. Karimijarbigloo, S. G. Kolahi, R. Azad, U. Bagci, D. Merhof, Frequency-domain refinement of vision transformers for robust medical image segmentation under degradation, IEEE Workshop/Winter Conference on Applications of Computer Vision (2025).

O. Ronneberger, P. Fischer, T. Brox, U-net: Convolutional networks for biomedical image segmentation, International Conference on Medical Image Computing and Computer-Assisted Intervention (2015).

F. Isensee, P. Jaeger, P. Full, P. Vollmuth, K. H. Maier-Hein, nnu-net for brain tumor segmentation, BrainLes@MICCAI (2020).

O. Oktay, J. Schlemper, L. L. Folgoc, M. J. Lee, M. Heinrich, K. Misawa, K. Mori, S. G. McDonagh, N. Y. Hammerla, B. Kainz, Attention u-net: Learning where to look for the pancreas, arXiv.org (2018).

H. Cao, Y. Wang, J. Chen, D. Jiang, X. Zhang, Q. Tian, M. Wang, Swin-unet: Unet-like pure transformer for medical image segmentation, ECCV Workshops (2021).

A. Hatamizadeh, D. Yang, H. Roth, D. Xu, Unetr: Transformers for 3d medical image segmentation, IEEE Workshop/Winter Conference on Applications of Computer Vision (2021).

A. Vaswani, N. Shazeer, N. Parmar, J. Uszkoreit, L. Jones, A. N. Gomez, L. Kaiser, I. Polosukhin, Attention is all you need, Neural Information Processing Systems (2017).

S. Woo, J. Park, J.-Y. Lee, I.-S. Kweon, Cbam: Convolutional block attention module, European Conference on Computer Vision (2018).

R. Xing, Frequ-fnet: Frequency-aware u-net for imbalanced medical image segmentation, arXiv.org (2025).

R. Zhao, B. Qian, X. Zhang, Y. Li, R. Wei, Y. Liu, Y. Pan, Rethinking dice loss for medical image segmentation, Industrial Conference on Data Mining (2020).

N. Abraham, N. Khan, A novel focal tversky loss function with improved attention u-net for lesion segmentation, IEEE International Symposium on Biomedical Imaging (2018).

D. Elreedy, A. Atiya, A comprehensive analysis of synthetic minority oversampling technique (smote) for handling class imbalance, Information Sciences (2019).

C. Shorten, T. Khoshgoftaar, A survey on image data augmentation for deep learning, Journal of Big Data (2019).

N. O. Mahony, S. Campbell, A. Carvalho, S. Harapanahalli, G. Velasco-Hernández, L. Krpalkova, D. Riordan, J. Walsh, Deep learning vs. traditional computer vision, Computer Vision Conference (2019).

Z. Chen, F. Long, Z. Qiu, J. Zhang, Z.-J. Zha, T. Yao, J. Luo, A closer look at the reflection formulation in single image reflection removal, IEEE Transactions on Image Processing (2024).

A. Kanakatte, K. Seemakurthy, J. Gubbi, J. Saha, A. Ghose, B. Purushothaman, Surgical smoke dehazing and color reconstruction, IEEE International Symposium on Biomedical Imaging (2021).

J. Lin, M. Jiang, Y. Pang, H. Wang, Z. Chen, C. Yan, Q. Liu, Y. Wang, A desmoking algorithm for endoscopic images based on improved u-net model, Concurrency and Computation (2021).

S. Nah, T. H. Kim, K. M. Lee, Deep multi-scale convolutional neural network for dynamic scene deblurring, Computer Vision and Pattern Recognition (2016).

Z. Zhang, L. Zhang, D. Meng, L. Huang, W. Xiao, W. Tian, Vehicle kinematics-based image augmentation against motion blur for object detectors, SAE technical paper series (2023).

Y. Rao, W. Zhao, Y. Tang, J. Zhou, S. Lim, J. Lu, Hornet: Efficient high-order spatial interactions with recursive gated convolutions, Neural Information Processing Systems (2022).

F. Isensee, P. Jaeger, S. A. A. Kohl, J. Petersen, K. H. Maier-Hein, nnu-net: a self-configuring method for deep learning-based biomedical image segmentation, Nature Methods (2020).

U. Baid, S. Ghodasara, M. Bilello, S. Mohan, E. Calabrese, E. Colak, K. Farahani, J. Kalpathy-Cramer, F. Kitamura, S. Pati, The rsna-asnr-miccai brats 2021 benchmark on brain tumor segmentation and radiogenomic classification, arXiv.org (2021).

R. Xue, Z. Zhang, Y. Zhao, Q. Zhang, M. Liang, Mmefu-net: A mamba-guided multi-encoder fusion u-net for tumor segmentation in ct images, IEEE Access (2025).

A. Hatamizadeh, V. Nath, Y. Tang, D. Yang, H. Roth, D. Xu, Swin unetr: Swin transformers for semantic segmentation of brain tumors in mri images, BrainLes@MICCAI (2022).

J. Liu, H. Yang, H.-Y. Zhou, Y. Xi, L. Yu, Y. Yu, Y. Liang, G. Shi, S. Zhang, H. Zheng, Swin-umamba: Mamba-based unet with imagenet-based pretraining, International Conference on Medical Image Computing and Computer-Assisted Intervention (2024).

Z. Zhou, M. R. Siddiquee, N. Tajbakhsh, J. Liang, Unet++: A nested u-net architecture for medical image segmentation, DLMIA/ML-CDS@MICCAI (2018).

C. Li, X. Liu, W. Li, C. Wang, H. Liu, Y. Yuan, U-kan makes strong backbone for medical image segmentation and generation, AAAI Conference on Artificial Intelligence (2024).

Y. Gao, M. Zhou, D. N. Metaxas, Utnet: A hybrid transformer architecture for medical image segmentation, International Conference on Medical Image Computing and Computer-Assisted Intervention (2021).

T. Y. Tsai, L. Lin, S. Hu, M.-C. Chang, H. Zhu, X. Wang, Uu-mamba: Uncertainty-aware u-mamba for cardiac image segmentation, Conference on Multimedia Information Processing and Retrieval (2024).