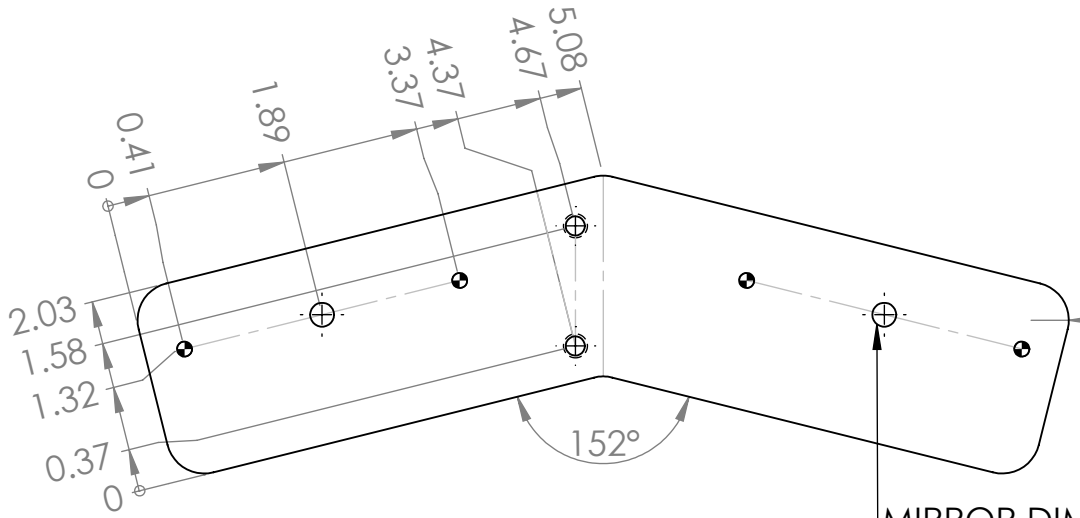

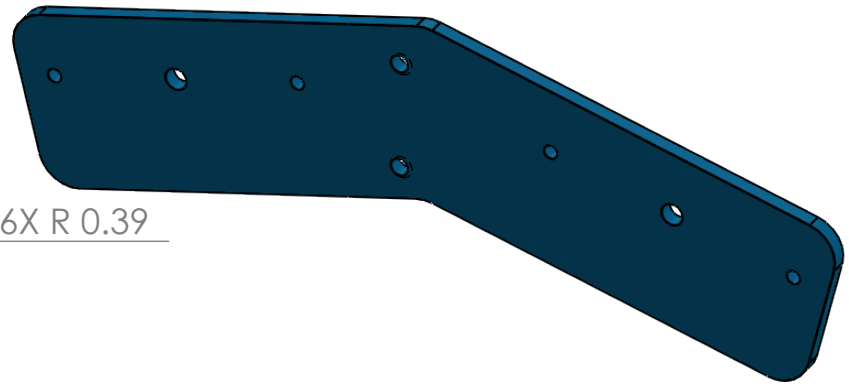

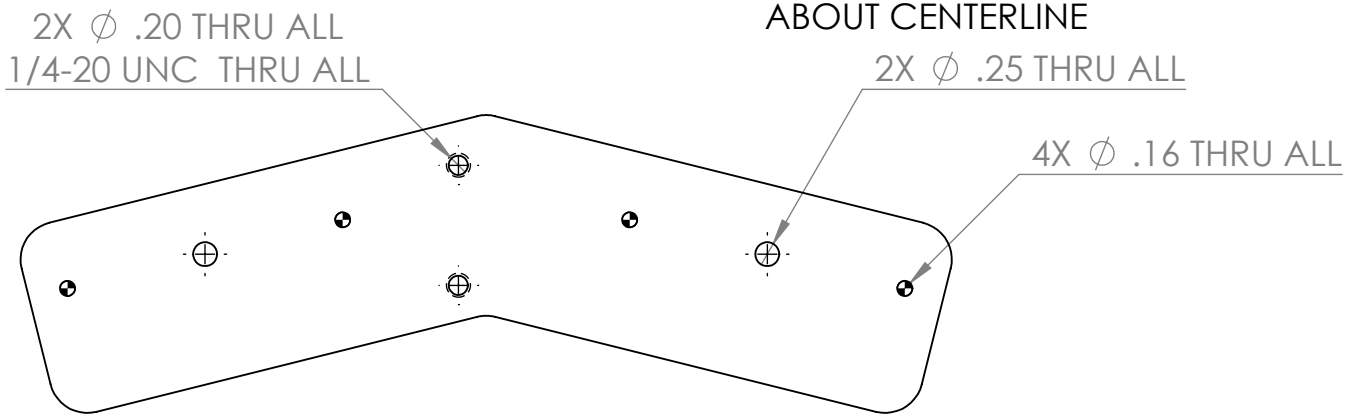

UNLESS OTHERWISE SPECIFIED: DIMENSIONS ARE IN INCHES SURFACE FINISH: TOLERANCES: LINEAR: +- .005 ANGULAR:	FINISH: Powder Coat Black - Semi Gloss	DEBURR AND BREAK SHARP EDGES			REVISION
	NAME	SIGNATURE	DATE		TITLE:
DRAWN					
CHK'D					
APPV'D					
MFG					
Q.A				MATERIAL: 3/16 Steel	DWG NO. 28-PM01 — A4
				WEIGHT:	SCALE:1:2 — SHEET 1 OF 1

SOLIDWORKS Educational Product. For Instructional Use Only.