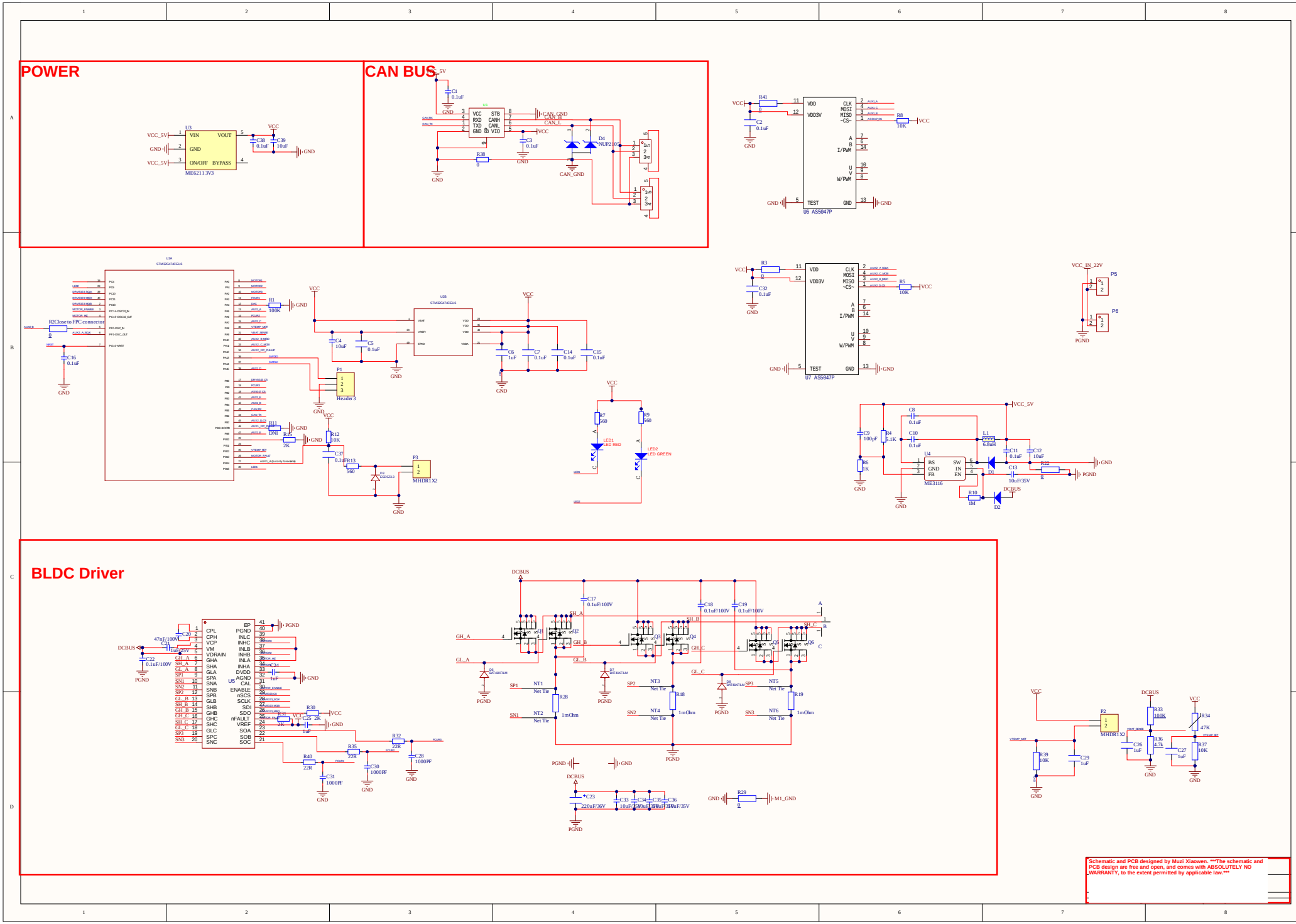
POWER
CAN BUS
BLDC Driver
U3
ME6211 3V3
U1
U6 AS5047P
U7 AS5047P
U2A
STM32G474CEU6
U2B
STM32G474CEU6
U4
ME3116
MHDR1X2
LED1 LED RED
LED2 LED GREEN
DCBUS
VCC
GND
PGND
M1_GND
Schematic and PCB designed by Muzi Xiaowen. ***The schematic and PCB design are free and open, and comes with ABSOLUTELY NO WARRANTY, to the extent permitted by applicable law.***

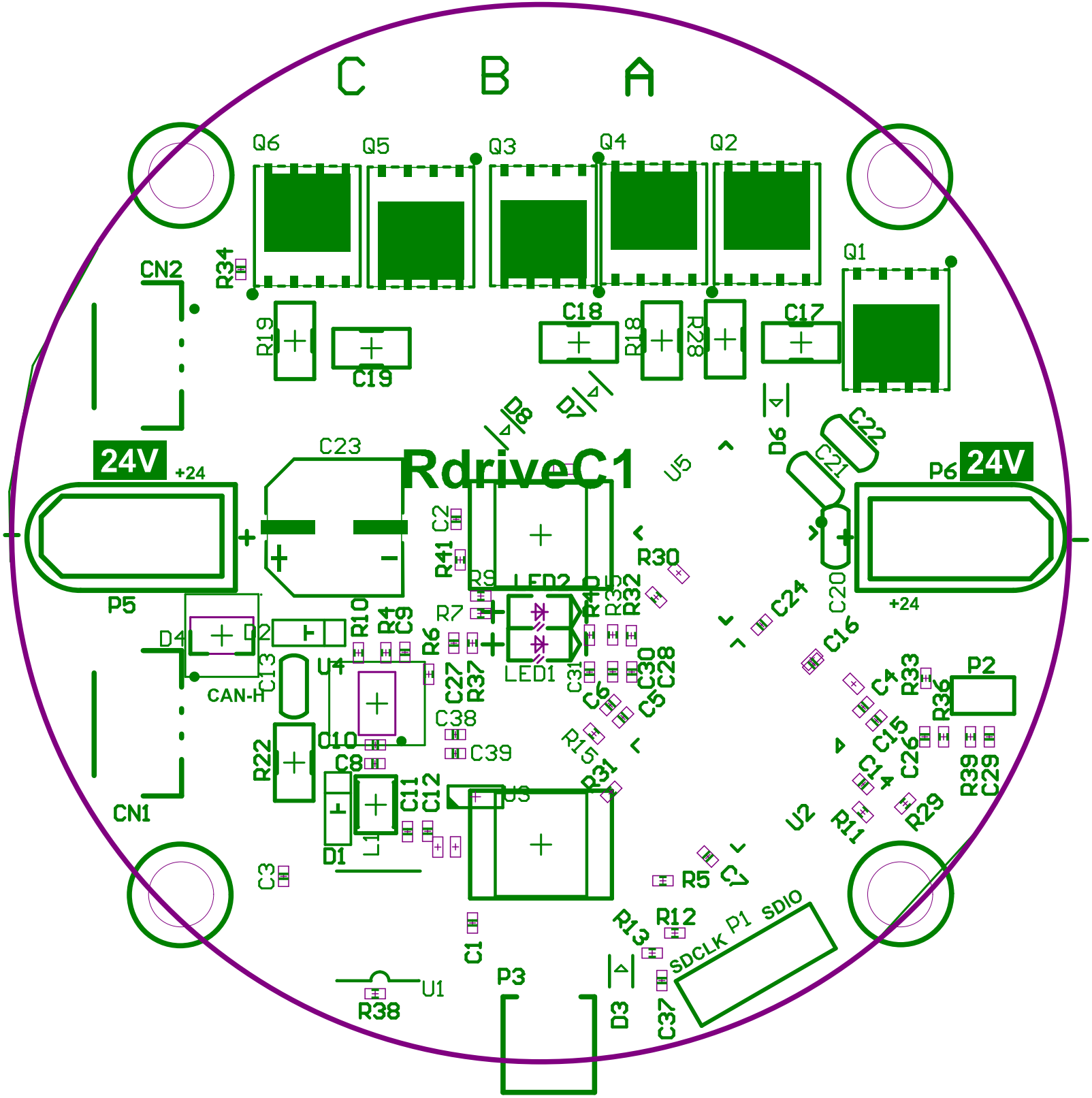
RdriveC1
C B A
Q6
Q5
Q3
Q4
Q2
Q1
CN2
CN1
R34
R19
C19
C18
R18
R28
C17
D8
D7
D6
C22
C21
C23
24V
+24
P5
P6
24V
+24
U5
R30
C2
R41
R9
LED2
R7
R4
R3
R32
C24
C20
C16
D4
D2
R10
C9
R6
C13
U4
CAN-H
C27
R37
C38
C39
C31
C30
C28
C6
C5
R15
R31
C4
R33
P2
R36
C15
C26
R39
C29
R29
R11
U2
C14
C7
R5
R22
C10
C8
C11
C12
U3
LED1
D1
L1
C3
C1
R13
R12
SDCLK
P1
SDIO
U1
R38
P3
D3
C37