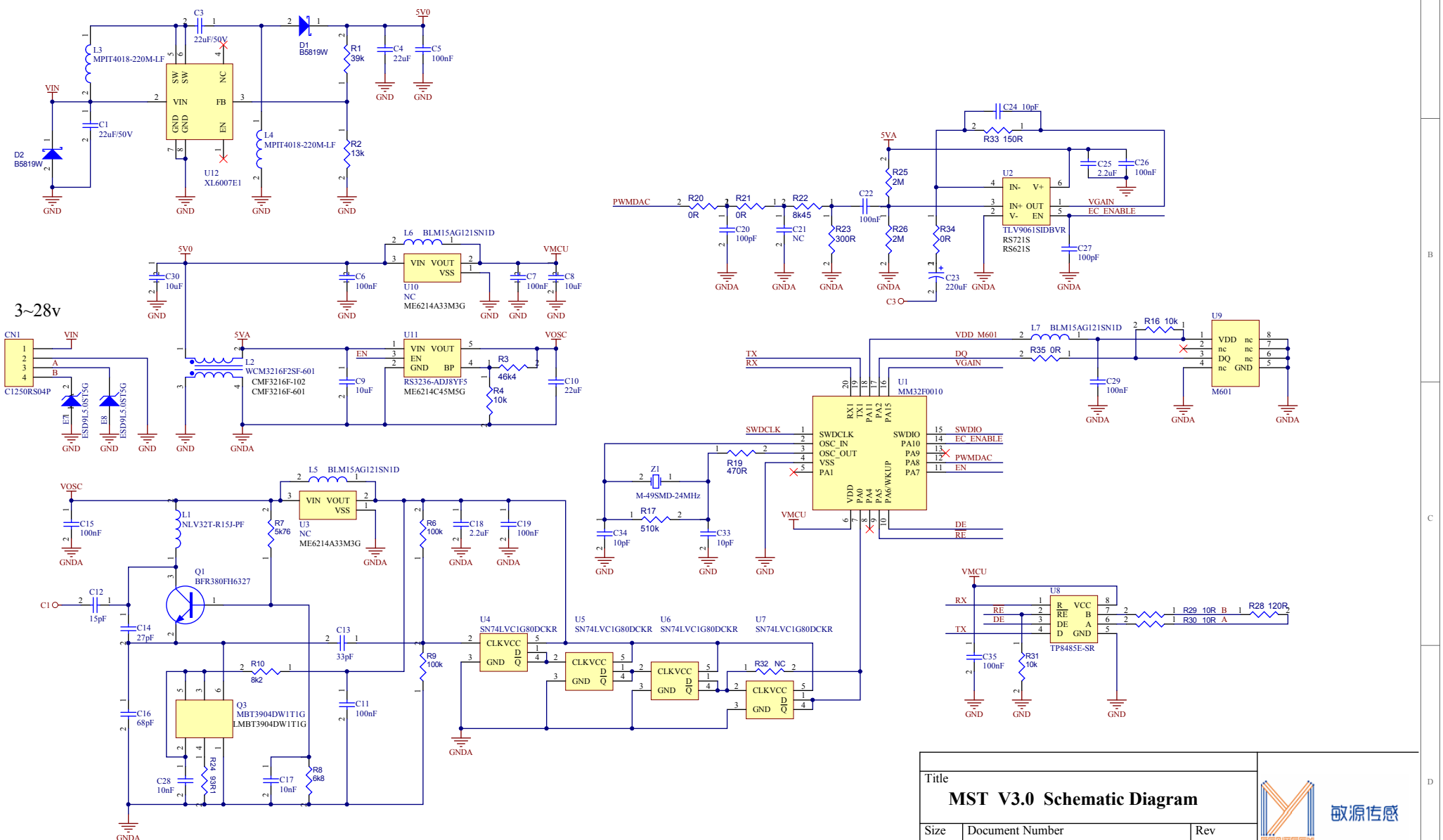

Title

MST V3.0 Schematic Diagram

Size	Document Number	Rev
A4		3.0

Date: 2022/1/20 | Sheet 1 of 1 | Drawn By:

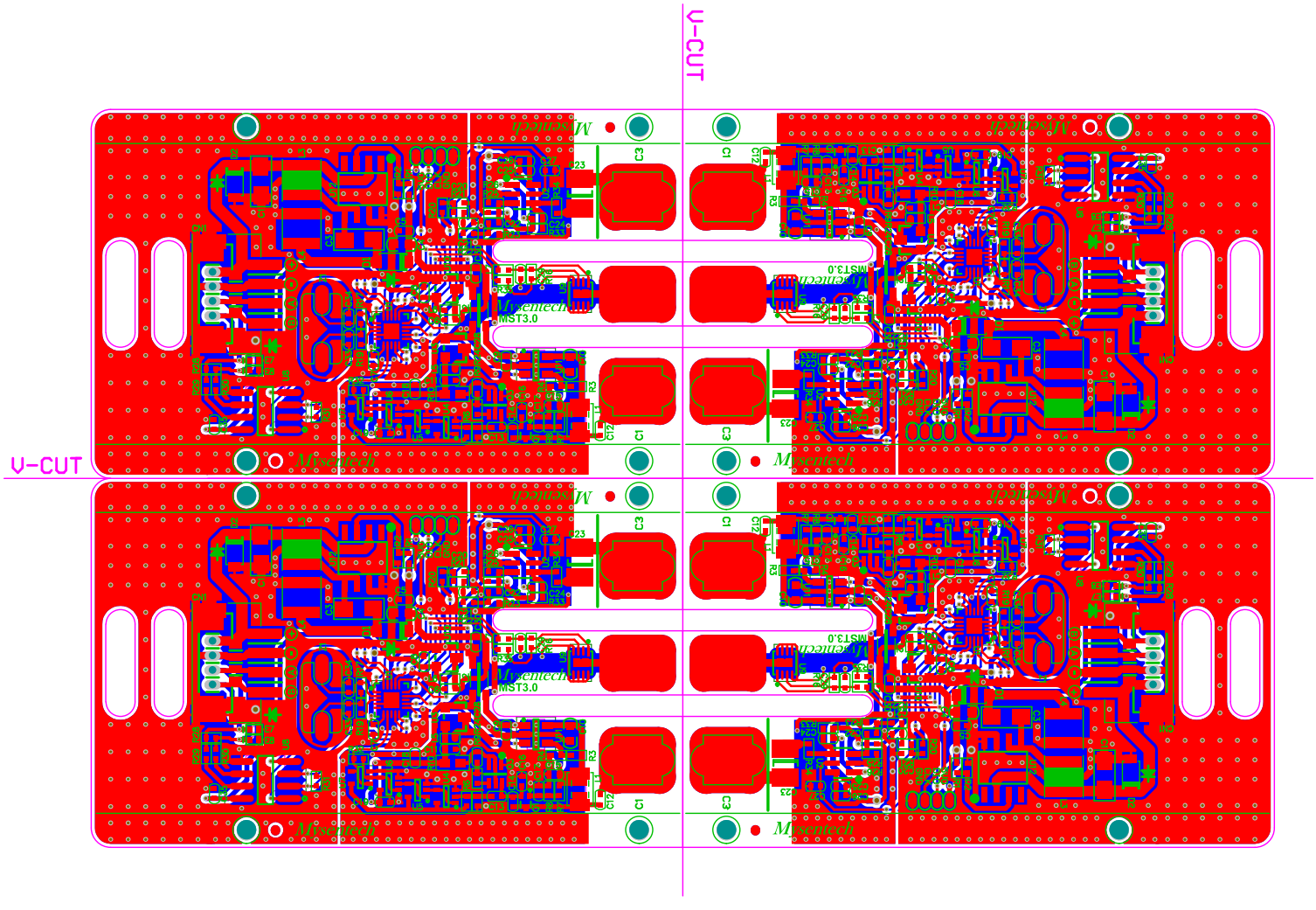
V-CUT
V-CUT
Mycentech
MST3.0