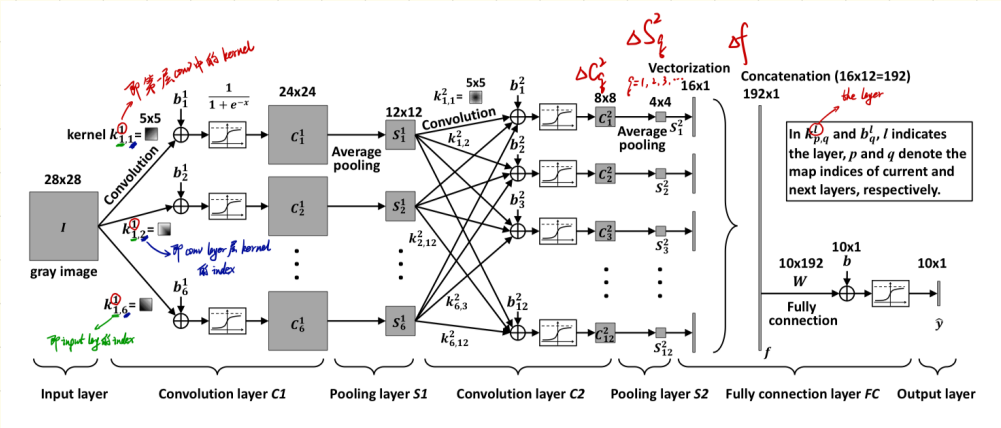

* Forward

* Input : 28 x 28 (2D)

* C1 layer: k^1_p (size 5x5), b^1_p (size 1x1), $p=1,2,\cdots,6$ 即 C1 layer 共有 6 个 filter, 每个 5x5

5x5x6

* C2 layer: k^2_{pq} (size 5x5), b^1_q (size 1x1), $q=1,2,\cdots,12$, 即 C2 layer 共有 6个 filter 每个 5x5x6

5x5x6 x12

* FC layer : W (size 10x192), b (size 10x1)

output 有10个 class

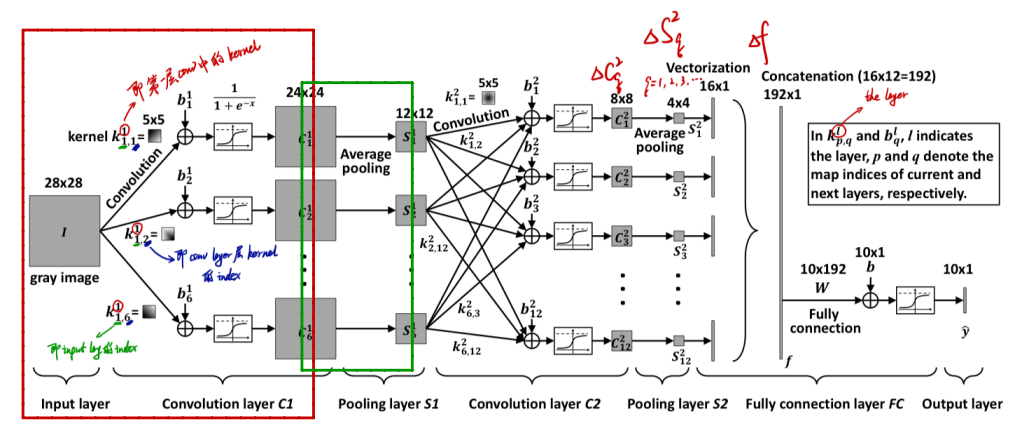

* Conv 1

$$\sigma(x) = \frac{1}{1+e^{-x}} \Rightarrow \sigma'(x) = \sigma(x)\left(1-\sigma(x)\right)$$

$$C^1_p(i,j) = \sigma\left(\sum_{u=-2}^{2}\sum_{v=-2}^{2} I(i-u, j-v)\cdot k^1_p(u,v) + b^1_p\right) \Rightarrow \text{element}$$

$$\Downarrow$$

$$\underbrace{C^1_p}_{24\times 24} = \sigma\left(\underbrace{I}_{28\times 28} * \underbrace{k^1_p}_{5\times 5} + \underbrace{b^1_p}_{1\times 1}\right)$$

p-th kernel

p-th bais

* Pooling Layer S1

$$S^1_p(i,j) = \frac{1}{4}\sum_{u=0}^{1}\sum_{v=0}^{1} C^1_p(2i-u, 2j-v) \quad , \quad i,j = 1,2,\cdots,12$$

12×12 $\quad$ 24×24

Average Pooling

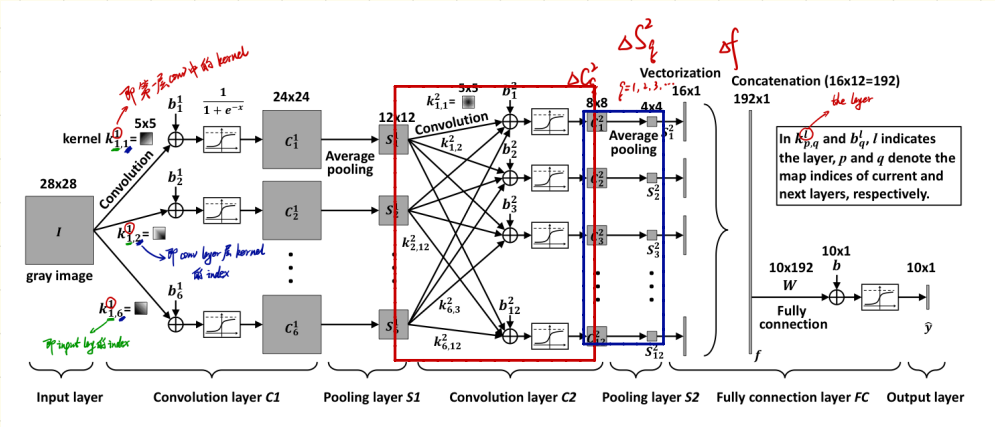

* $$C^2_q(i,j) = \sigma\left(\sum_{p=1}^{6}\sum_{u=-2}^{2}\sum_{v=-2}^{2} S^1_p(i-u,j-v)\cdot k^2_{p,q}(u,v) + b^2_q\right)$$ ⇒ element

input 的 kernel 的 p-th layer

↳ C2 的 q-th filter

$$C^2_q = \sigma\left(\sum_{p=1}^{6} S^1_p * k^2_{pq} + b^2_q\right)$$

8x8 12x12 $q=1,2,\cdots,12$

其中 $\sigma(x) = \frac{1}{1+e^{-x}}$

C^2: 8x8 x 12

12个 filter 的 output.

* $$S^2_q(i,j) = \underbrace{\frac{1}{4}\sum_{u=0}^{1}\sum_{v=0}^{1}}_{2\times 2 \text{ average pooling}} C^2_q(2i-u,2j-v), \quad i,j=1,2,\cdots,4$$

8x2

4x4

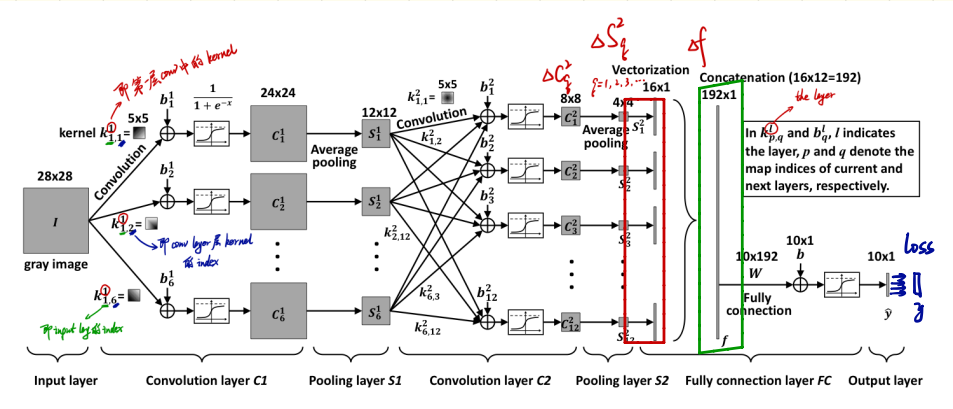

* $f = F(\{S_q^2\}_{q=1,2,\cdots,12})$

將 12 个 S_q^2 vectorization and concatenation

$4 \times 4 \times 12 \Rightarrow 192$

* Fully Connection layer FC

$$\hat{y} = \sigma(W \times f + b)$$

$10 \times 192 \quad 192 \times 1 \quad 1 \times 1$

10×1

* Loss Function

$$L = \frac{1}{2} \sum_{i=1}^{10} (\hat{y}_{(i)} - y_{(i)})^2$$

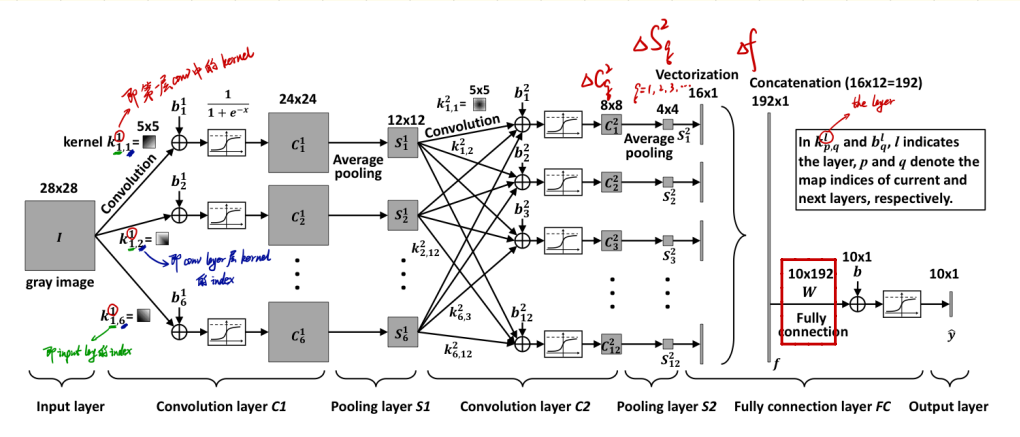

2.1 ΔW (size 10×192)

$$L = \frac{1}{2}\sum_{i=1}^{10}\left(\hat{y}_{(i)} - y_{(i)}\right)^2$$

$$\Delta W_{(i,j)} = \frac{\partial L}{\partial W_{(i,j)}} = \frac{\partial L}{\partial \hat{y}_{(i)}} \cdot \frac{\partial \hat{y}_{(i)}}{\partial W_{(i,j)}}$$

$$= \left(\hat{y}_{(i)} - y_{(i)}\right) \cdot \frac{\partial \hat{y}_{(i)}}{\partial W_{(i,j)}}$$

$$\hat{y}_{(i)} = \sigma\left(\sum_{j=1}^{192} W_{(i,j)} \times f_{(j)} + b_{(i)}\right)$$

$$= \sigma(x)$$

$$= \left(\hat{y}_{(i)} - y_{(i)}\right) \cdot \hat{y}_{(i)} \cdot \left(1 - \hat{y}_{(i)}\right) \cdot \frac{\partial}{\partial W_{(i,j)}}\left(\sum_{j=1}^{192} W_{(i,j)} \times f_{(j)} + b_{(i)}\right)$$

$$\sigma'(x) = \sigma(x)\left(1 - \sigma(x)\right)$$

$$\hat{y}'_{(i)} = \hat{y}_{(i)}\left(1 - \hat{y}_{(i)}\right)$$

$$= \left(\hat{y}_{(i)} - y_{(i)}\right) \cdot \hat{y}_{(i)} \cdot \left(1 - \hat{y}_{(i)}\right) \cdot f_{(j)}$$

def: $\Delta \hat{y}_{(i)} = \left(\hat{y}_{(i)} - y_{(i)}\right) \cdot \hat{y}_{(i)} \cdot \left(1 - \hat{y}_{(i)}\right)$

$$\Delta W_{(i,j)} = \Delta \hat{y}_{(i)} \cdot f_{(j)} \Rightarrow \Delta W = \underset{10 \times 1}{\Delta \hat{y}} \times \underset{1 \times 192}{f^T}$$

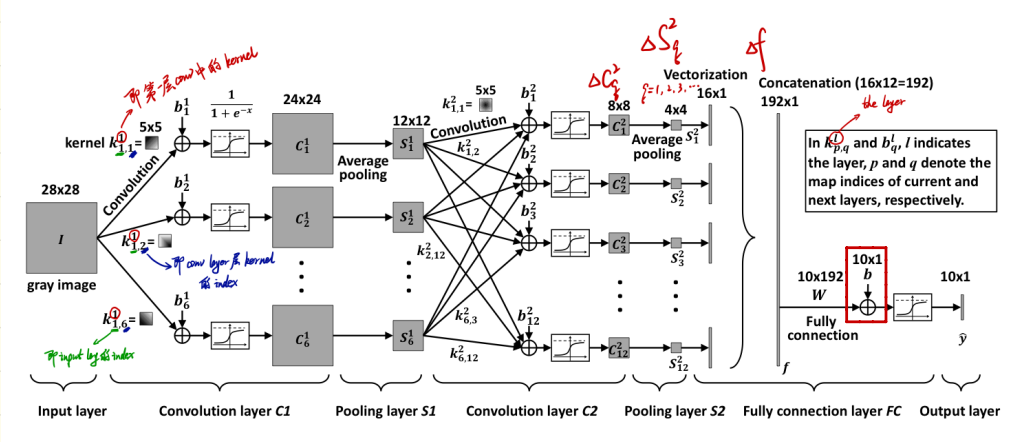

$$* \quad \Delta b_{(i)} = \frac{\partial L}{\partial b_{(i)}} = \frac{\partial L}{\partial \hat{y}_{(i)}} \cdot \frac{\partial \hat{y}_{(i)}}{\partial b_i}$$

$$= \underbrace{\left(\hat{y}_{(i)} - y_{(i)}\right) \cdot \hat{y}_{(i)} \cdot \left(1 - \hat{y}_{(i)}\right)}_{\Delta \hat{y}_{(i)}} \cdot 1$$

$$\Rightarrow \Delta b = \Delta \hat{y}$$

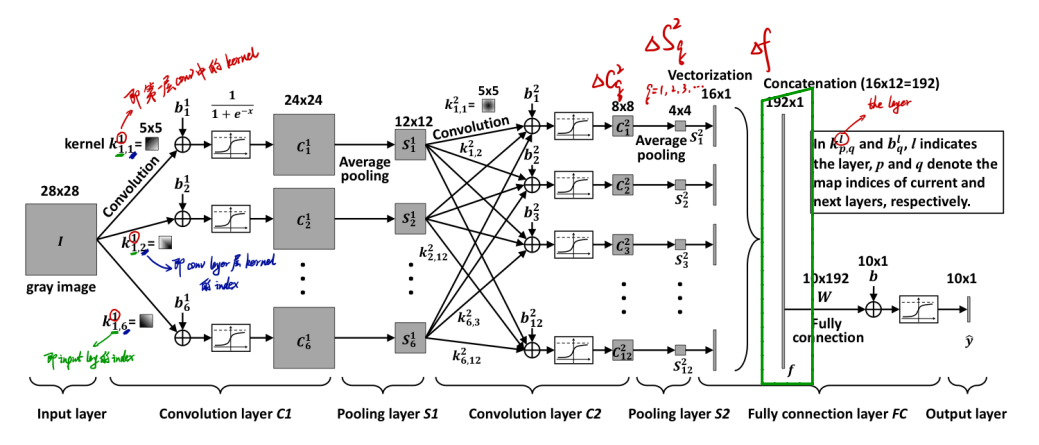

$$\Delta f_{(j)} = \frac{\partial L}{\partial f_{(i)}} \qquad L = \frac{1}{2}\sum_{i=1}^{10}\left(\hat{y}_{(i)} - y_{(i)}\right)^2$$

$$= \sum_{i=1}^{10} \frac{\partial L}{\partial \hat{y}_{(i)}} \cdot \frac{\partial \hat{y}_{(i)}}{\partial f_{(j)}}$$

$$= \sum_{i=1}^{10} \left(\hat{y}_{(i)} - y_{(i)}\right) \cdot \hat{y}_{(i)}\left(1-\hat{y}_{(i)}\right) \cdot \frac{\partial}{\partial f_{(j)}}\left(\sum_{j=1}^{192} W_{(i,j)} \times f_{(j)} + b_{(i)}\right)$$

$$= \sum_{i=1}^{10} \left(\hat{y}_{(i)} - y_{(i)}\right) \cdot \hat{y}_{(i)} \cdot \left(1-\hat{y}_{(i)}\right) \cdot W_{(i,j)}$$

$$= \sum_{i=1}^{10} \Delta \hat{y}_{(i)} \cdot W_{(i,j)} \quad \Rightarrow \text{element}$$

$$\Rightarrow \underbrace{\Delta f}_{192\times 1} = \underbrace{W^T}_{192\times 10} \times \underbrace{\Delta \hat{y}}_{10\times 1}$$

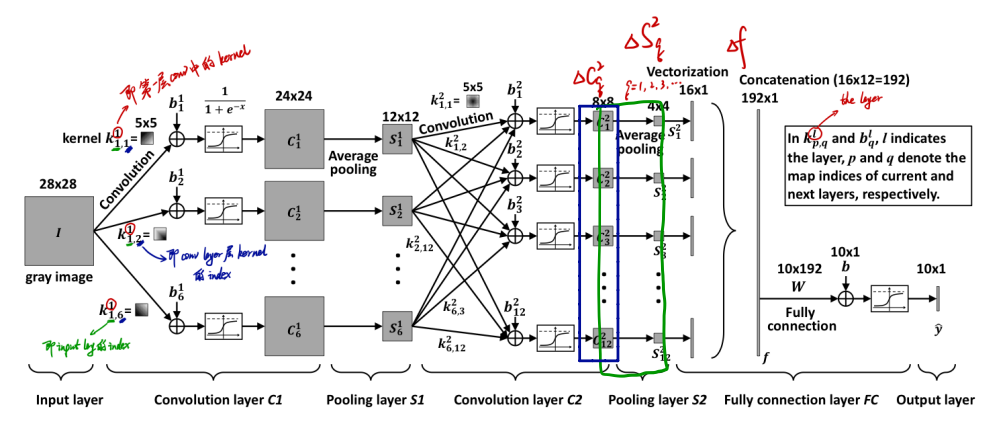

$$* \ \{\Delta S_q^2\}_{q=1,2,\cdots,12} = F^{-1}(\Delta f)$$

$$\Delta C_q^2(i,j) = \frac{1}{4}\Delta S_q^2(\lceil i/2\rceil, \lceil j/2\rceil), \qquad i=1,2,\cdots,8$$

8x8 ← 4x4 →

$\Downarrow$

ΔS_q^2 均分至 4个 C_q^2 elements.

$$* \ \Delta k_{p,q}^2(u,v) = \frac{\partial L}{\partial k_{p,q}^2(u,v)}$$

$$= \sum_{i=1}^{8}\sum_{j=1}^{8} \frac{\partial L}{\partial C_q^2(i,j)} \cdot \frac{\partial C_q^2(i,j)}{\partial k_{p,q}^2(u,v)}$$

$$= \sum_{i=1}^{8}\sum_{j=1}^{8} \Delta C_q^2(i,j) \cdot \frac{\partial}{\partial k_{p,q}^2(u,v)} \sigma\left(\sum_{p=1}^{6}\sum_{u=-2}^{2}\sum_{v=-2}^{2} S_p^1(i-u,j-v)\cdot k_{p,q}^2(u,v) + b_q^2\right)$$

$$= \sum_{i=1}^{8}\sum_{j=1}^{8} \underbrace{\Delta C_q^2(i,j)\cdot\left(1-C_q^2(i,j)\right)\cdot C_q^2(i,j)}_{\Delta C_{q,\sigma}^2(i,j) = \Delta C_q^2(i,j)\cdot C_q^2(i,j)\cdot(1-C_q^2(i,j))} \cdot S_p^1(i-u,j-v)$$

$\hookrightarrow S_{p,rot}^1(i-u, v-j)$

$$\Delta k_{p,q}^2(u,v) = \sum_{i=1}^{8}\sum_{j=1}^{8} S_{p,rot180}^1(u-i, v-j)\cdot \Delta C_{q,\sigma}^2(i,j)$$

$$\Rightarrow \Delta k_{p,q}^2 = S_{p,rot180}^1 * C_{q,\sigma}^2$$

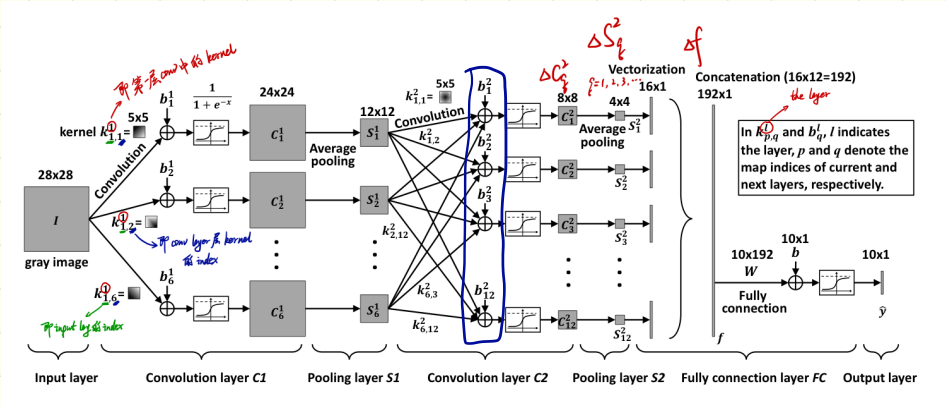

$$* \quad \Delta b_q^2 = \frac{\partial L}{\partial b_q^2} = \sum_{i=1}^{8}\sum_{j=1}^{8} \frac{\partial L}{\partial C_q^2(i,j)} \cdot \frac{\partial C_q^2(i,j)}{\partial b_q^2}$$

$$= \sum_{i=1}^{8}\sum_{j=1}^{8} \Delta C_q^2(i,j) \cdot C_q^2(i,j) \cdot \left(1 - C_q^2(i,j)\right) \cdot \frac{\partial}{\partial b_q^2}\left(\sum_{p=1}^{6}\sum_{u=-2}^{2}\sum_{v=-2}^{2} S_p^1(i-u, j-v) \cdot k_{p,q}^2(u,v) + b_q^2\right)$$

$$= \sum_{i=1}^{8}\sum_{j=1}^{8} \Delta C_q^2(i,j) \cdot C_q^2(i,j) \cdot \left(1 - C_q^2(i,j)\right) \cdot 1$$

$$= \sum_{i=1}^{8}\sum_{j=1}^{8} \Delta C_{q,\sigma}^2(i,j)$$

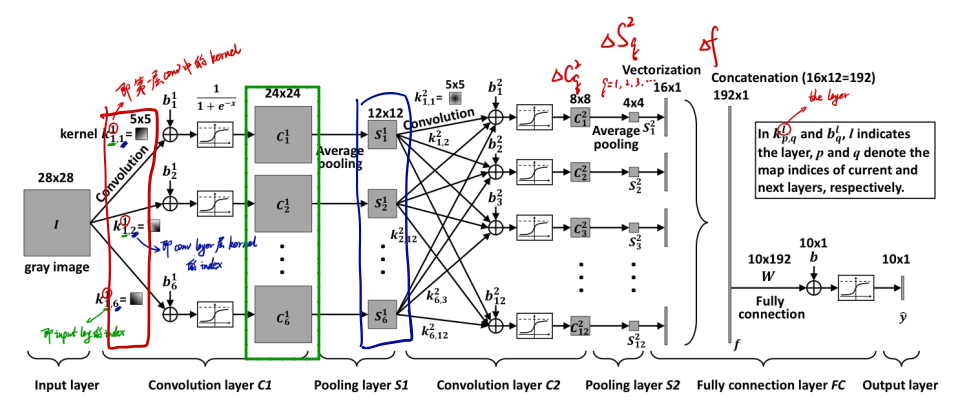

$$\Delta S^1_p(i,j) = \frac{\partial L}{\partial S^1_p(i,j)} = \sum_{q=1}^{12}\sum_{u=-2}^{2}\sum_{v=-2}^{2} \Delta G^2_{q,\sigma}(i+u, j+v)\cdot k^2_{p,q}(u,v)$$

$$\Downarrow$$

$$\Delta S^1_p = \sum_{q=1}^{12} \Delta G^2_{q,\sigma} * k^2_{p,q,\,rot180}$$

$$\Delta G^1_p(i,j) = \frac{1}{4}\Delta S^1_p(\lceil i/2\rceil, \lceil j/2\rceil) \qquad i,j = 1,2,\cdots,24$$

$\rightarrow 12\times 12$

$\swarrow$ 24×24

$$\Delta k^1_{1,p}(u,v) = \frac{\partial L}{\partial k^1_{1,p}(u,v)} = \sum_{i=1}^{24}\sum_{j=1}^{24} \frac{\partial L}{\partial G^1_p(i,j)}\cdot\frac{\partial G^1_p(i,j)}{\partial k^1_p(u,v)}$$

$$= \sum_{i=1}^{24}\sum_{j=1}^{24} \Delta G^1_p(i,j)\cdot G^1_p(i,j)\left(1-G^1_p(i,j)\right)\cdot\frac{\partial}{\partial k^1_p(u,v)}\left(\sum_{u=-2}^{2}\sum_{v=-2}^{2} I(i-u,j-v)\cdot k^1_p(u,v) + b^1_p\right)$$

$$= \sum_{i=1}^{24}\sum_{j=1}^{24} \underbrace{\Delta G^1_p(i,j)\cdot G^1_p(i,j)\cdot\left(1-G^1_p(i,j)\right)}_{\Delta G^1_{p,\sigma}(i,j)}\cdot I(i-u,j-v)$$

$$\Delta k^1_{1,p}(u,v) = \sum_{i=1}^{24}\sum_{j=1}^{24} I_{rot180}(u-i, v-j)\cdot \Delta G^1_{p,\sigma}(i,j) \qquad \text{element}$$

$$\Rightarrow \Delta k^1_{1,p} = I_{rot180} * \Delta G^1_{p,\sigma} \qquad \text{matrix}$$

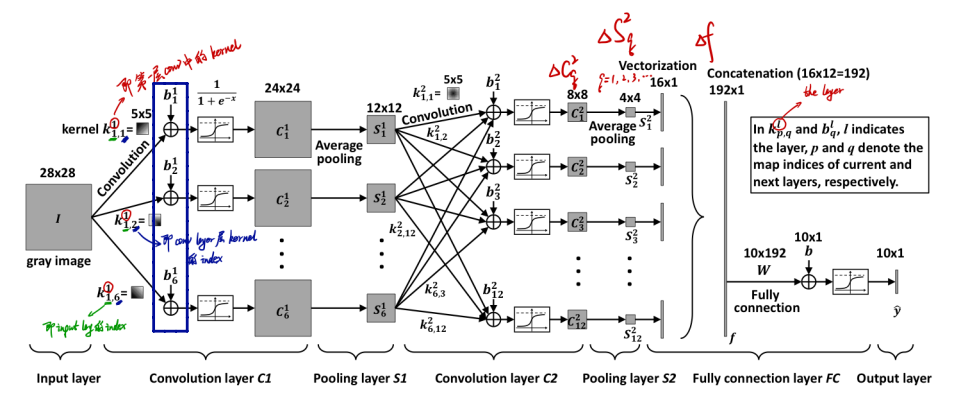

$$\Delta b_p^1 = \frac{\partial L}{\partial b_p^1} = \sum_{i=1}^{24}\sum_{j=1}^{24} \frac{\partial L}{\partial G_p^1(i,j)} \cdot \frac{\partial G_p^1(i,j)}{\partial b_p^1}$$

$$= \sum_{i=1}^{24}\sum_{j=1}^{24} \Delta G_p^1(i,j) \cdot G_p^1(i,j) \cdot \left(1 - G_p^1(i,j)\right) \cdot \frac{\partial}{\partial b_p^1}\left(\sum_{u=-2}^{2}\sum_{v=-2}^{2} I(i-u, j-v) \cdot k_p^1(u,v) + b_p^1\right)$$

$$= \sum_{i=1}^{24}\sum_{j=1}^{24} \Delta G_p^1(i,j) \cdot G_p^1(i,j) \cdot \left(1 - G_p^1(i,j)\right)$$

$$= \sum_{i=1}^{24}\sum_{j=1}^{24} \Delta G_{p,\sigma}^1(i,j)$$

Parameter Update

$$\begin{cases} k^1_{1,p} = k^1_{1,p} - \underline{\underline{\alpha}} \cdot \Delta k^1_{1,p} \\ b^1_p = b^1_p - \underline{\underline{\alpha}} \cdot \Delta b^1_p \end{cases}$$

$$\begin{cases} k^2_{p,q} = k^2_{p,q} - \underline{\underline{\alpha}} \cdot \Delta k^2_{p,q} \\ b^2_q = b^2_q - \underline{\underline{\alpha}} \cdot \Delta b^2_q \end{cases}$$

$$\begin{cases} W = W - \underline{\underline{\alpha}} \cdot \Delta W \\ b = b - \underline{\underline{\alpha}} \cdot \Delta b \end{cases}$$