Cascaded Mach-Zehnder wavelength filters in silicon photonics for low loss and flat pass-band WDM (de-)multiplexing

Folkert Horst,[1,*] William M.J. Green,[2] Solomon Assefa,[2] Steven M. Shank,[3] Yurii A. Vlasov,[2] and Bert Jan Offrein[1]

[1] *IBM Research - Zürich, Säumerstrasse 4, 8803 Rüschlikon, Switzerland*
[2] *IBM Research – T.J.Watson Research Center, Yorktown Heights, NY 10598, USA*
[3] *IBM Systems &Technology Group, Microelectronics Division, 1000 River St., Essex Junction, Vermont 05452, U.S.A.*
[*] *fho@zurich.ibm.com*

Abstract: We present 1-to-8 wavelength (de-)multiplexer devices based on a binary tree of cascaded Mach-Zehnder-like lattice filters, and manufactured using a 90 nm CMOS-integrated silicon photonics technology. We demonstrate that these devices combine a flat pass-band over more than 50% of the channel spacing with low insertion loss of less than 1.6 dB, and have a small device size of approximately 500 × 400 µm. This makes this type of filters well suited for application as WDM (de-)multiplexer in silicon photonics transceivers for optical data communication in large scale computer systems.

©2013 Optical Society of America

OCIS codes: (230.3120) Integrated optics devices; (230.7408) Wavelength filtering devices.

References and links

1. A. Benner, D. M. Kuchta, P. K. Pepeljugoski, R. A. Budd, G. Hougham, B. V. Fasano, K. Marston, H. Bagheri, E. J. Seminaro, H. Xu, D. Meadowcroft, M. H. Fields, L. McColloch, M. Robinson, F. W. Miller, R. Kaneshiro, R. Granger, D. Childers, and E. Childers, "Optics for high-performance servers and supercomputers," in *Optical Fiber Communication Conference*, OSA Technical Digest (CD) (Optical Society of America, 2010), paper OTuH1. *http://www.opticsinfobase.org/abstract.cfm?URI=OFC-2010-OTuH1*
2. T. Fukazawa, F. Ohno, and T. Baba, "Very compact arrayed-waveguide-grating demultiplexer using Si photonic wire waveguides," Jpn. J. Appl. Phys. **43**(No. 5B), L673–L675 (2004).
3. J. Brouckaert, W. Bogaerts, P. Dumon, D. Van Thourhout, and R. Baets, "Planar concave grating demultiplexer fabricated on a nanophotonic silicon-on-insulator platform," J. Lightwave Technol. **25**(5), 1269–1274 (2007).
4. S. Pathak, M. Vanslembrouck, P. Dumon, D. Van Thourhout, and W. Bogaerts, "Optimized silicon AWG with flattened spectral response using an MMI aperture," J. Lightwave Technol. **31**(1), 87–93 (2013).
5. C. Dragone, "Frequency routing device having a wide and substantially flat passband," U.S. Patent 5488680, 1996.
6. G. H. B. Thompson, R. Epworth, C. Rogers, S. Day, and S. Ojha, "An original low-loss and pass-band flattened SiO2 on Si planar wavelength demultiplexer," in *Optical Fiber Communication Conference*, Vol. 2 of 1998 OSA Technical Digest Series (Optical Society of America, 1998), paper TuN1. *http://www.opticsinfobase.org/abstract.cfm?URI=OFC-1998-TuN1*
7. K. Yamada, T. Shoji, T. Tsuchizawa, T. Watanabe, J. Takahashi, and S. Itabashi, "Silicon-wire-based ultrasmall lattice filters with wide free spectral ranges," Opt. Lett. **28**(18), 1663–1664 (2003).
8. Y. P. Li, C. H. Henry, C. Y. Laskowski, H. H. Yaffe, and R. L. Sweatt, "Monolithic optical waveguide 1.31/1.55 µm WDM with −50 dB crosstalk over 100 nm bandwidth," Electron. Lett. **31**(24), 2100–2101 (1995).
9. C. K. Madsen and J. H. Zhao, *Optical Filter Design and Analysis: A Signal Processing Approach* (John Wiley & Sons Inc., 2001).
10. F. Horst, W. M. Green, B. Offrein, and Y. A. Vlasov, "Silicon photonic WDM devices: simulation, design and implementation," Proc. SPIE **7386**, 73862L, 73862L-9 (2009).
11. F. Horst, "Silicon integrated waveguide devices for filtering and wavelength demultiplexing," in *Optical Fiber Communication Conference*, OSA Technical Digest (CD) (Optical Society of America, 2010), paper OWJ3. *http://www.opticsinfobase.org/abstract.cfm?URI=OFC-2010-OWJ3*
12. H. Toba, K. Oda, N. Takato, and K. Nosu, "5GHz-spaced, eight-channel, guided-wave tunable multi/demultiplexer for optical FDM transmission systems," Electron. Lett. **23**(15), 788–789 (1987).
13. C. G. H. Roeloffzen, F. Horst, B. J. Offrein, R. Germann, G. L. Bona, H. W. M. Salemink, and R. M. de Ridder, "Tunable Passband Flattened 1-from-16 Binary-Tree Structured Add-After-Drop Multiplexer Using SiON Waveguide Technology," IEEE Photon. Technol. Lett. **12**(9), 1201–1203 (2000).

#186449 - $15.00 USD Received 5 Mar 2013; revised 18 Apr 2013; accepted 19 Apr 2013; published 6 May 2013

14. C. H. Henry, E. J. Laskowski, Y. P. Li, and H. H. Yaffe, "Optimized waveguide structure," US patent 5719976.
15. S. Assefa, S. Shank, W. Green, M. Khater, E. Kiewra, C. Reinholm, S. Kamlapurkar, A. Rylyakov, C. Schow, F. Horst, H. Pan, T. Topuria, P. Rice, D. M. Gill, J. Rosenberg, T. Barwicz, M. Yang, J. Proesel, J. Hofrichter, B. Offrein, X. Gu, W. Haensch, J. Ellis-Monaghan, and Y. Vlasov, "CMOS Integrated Silicon Nanophotonics: Enabling Technology for Exascale Computational Systems," presented at SEMICON 2011, Tokyo, Japan.
16. S. Assefa, S. Shank, W. Green, M. Khater, E. Kiewra, C. Reinholm, S. Kamlapurkar, A. Rylyakov, C. Schow, F. Horst, H. Pan, T. Topuria, P. Rice, D. M. Gill, J. Rosenberg, T. Barwicz, M. Yang, J. Proesel, J. Hofrichter, B. Offrein, X. Gu, W. Haensch, J. Ellis-Monaghan, and Y. Vlasov, "A 90nm CMOS integrated Nano-Photonics technology for 25Gbps WDM optical communications applications," Electron Devices Meeting (IEDM), 2012 IEEE International, pp.33.8.1,33.8.3. *http://ieeexplore.ieee.org/stamp/stamp.jsp?tp=&arnumber=6479162&isnumber=6478950*

1. Introduction

We will present wavelength division multiplexing (WDM) filters that have been developed for production in a 90 nm CMOS-integrated silicon photonics process and for incorporation in transceivers for optical data communication. One envisioned application of these transceivers is in Peta- and Exa-scale computer systems, of which one example is described in [1]. In its largest configuration this system uses more than 2 million optical links and the size, consumed power and cost of the transceivers contribute significantly to the metrics of the total system. Therefore, for application in large-scale computer systems, the size, power consumption and cost of the transceivers must be kept low and the optical links should function without optical amplification and temperature control, which would again increase size, power consumption and cost. From these considerations we deduct two main requirements for the (de-)multiplexing filters in the transceivers: First, to minimize the impact of the filters on the limited optical power budget, the losses in the device must be as low as possible. And second, to make the use of thermal stabilization unnecessary, the device has to be tolerant to wavelength shifts resulting from temperature variations of the filter. This tolerance can be achieved by designing the device with flat transmission pass-bands

In CMOS-integrated silicon photonics, (de-)multiplexing filters are often based on arrayed waveguide gratings [2], or echelle gratings [3]. However, in these devices it is difficult to achieve very low losses, and flattening of the pass-band either introduces 1 to 3 dB of extra loss, depending on the pass-band width [4], or requires extra filters that must work synchronously with the primary filter, which significantly increases total device size and complexity [5,6].

The requirements for low loss and flat transmission pass-bands can be met more easily by optical lattice filters [7–9]. These filters consist of a lattice of optical waveguides of varying lengths, joined by optical directional couplers. Waveguides and directional couplers are, apart from scattering loss on the waveguide side walls, inherently loss-less components, resulting in low-loss devices. As stated before, tolerance to temperature dependent wavelength shifts of the filters, can be achieved by designing the device with flat transmission pass-bands. In lattice filters, a flat pass-band can be designed into the filter curve by adding extra lattice stages [8]. This does not introduce significant extra loss, apart from some extra waveguide propagation loss, due to the increased device size [9].

However, the shape of the pass band and the extinction ratio of a lattice filter depend on the exact optical phase length of a small number of delay line waveguides and on the exact cross coupling length of a small number of directional couplers. Therefore, a good control of waveguide and directional coupler dimensions is required to produce devices that meet the required filtering specifications. In previous conference publications [10,11], we have demonstrated the basic functionality of these lattice filters, but with moderate device performance, on devices that were produced in a research facility. In this paper we present the detailed device design, and we show that these devices can be realized on a commercial production line, in silicon photonics technology integrated with CMOS electronics, with good crosstalk and insertion loss properties.

#186449 - $15.00 USD Received 5 Mar 2013; revised 18 Apr 2013; accepted 19 Apr 2013; published 6 May 2013
(C) 2013 OSA

2. Device Design

2.1 Cascaded Mach-Zehnder (CMZ) demultiplexer layout

The design parameters of the device presented here were chosen to represent a challenging feasibility demonstrator of the Cascaded Mach-Zehnder filter layout. Therefore we have chosen to (de-)multiplex 8 wavelength channels with a relatively small channel spacing of 3.2 nm. This requires accurate phase control of 11 relatively long delay lines. Downscaling the device, for example to 4 channels with a channel spacing of 5 nm, comparable to the 100 Gb Ethernet LR4 standard, should be relatively straightforward due to the lower number of filter stages and shorter delay line length.

The device design is based on simple four-port lattice filter building blocks serving as symmetric de-interleaving wavelength splitters. By cascading 7 of these wavelength splitters in a binary tree we can build a device that routes each of the 8 input wavelength bands to a dedicated output port [12], as shown in Fig. 1.

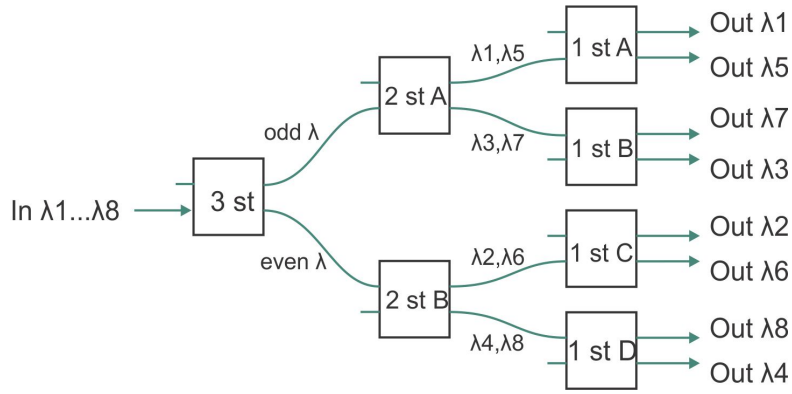

Fig. 1. Schematic layout of a 1 to 8 demultiplexer based on a binary tree of wavelength splitting filters.

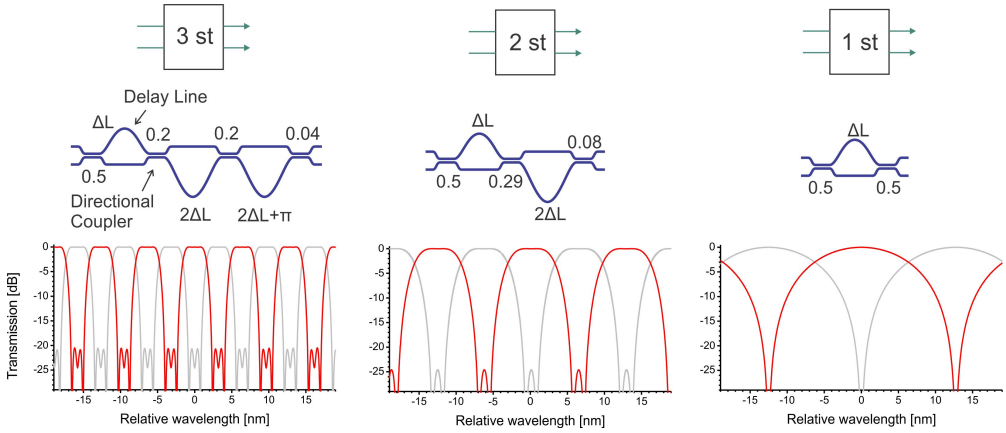

Fig. 2. Waveguide layout and calculated transmission spectra of the wavelength splitters used in the Cascaded Mach-Zehnder demultiplexer.

In Fig. 1, each square stands for a wavelength splitter based on a lattice filter with one, two or three delay stages, as denoted by the labels in the squares. The waveguide layout and theoretical transmission spectra of these splitters are shown in Fig. 2. For the calculations we used a simplified transfer matrix model [9], where constant values were used for the cross-coupling coefficients, group effective index and relative phases. The wavelength splitter with only one delay stage corresponds to the integrated version of the classical Mach-Zehnder

#186449 - $15.00 USD Received 5 Mar 2013; revised 18 Apr 2013; accepted 19 Apr 2013; published 6 May 2013
(C) 2013 OSA

interferometer, which has a periodic, sinusoidal transmission spectrum. The wavelength splitters with two and three delay stages have improved filter curves, with flat transmission pass-bands and wider stop-bands with strong suppression of the drop channels [8,13]. These flat-pass-band splitters are employed toward the input side of the tree, where the wavelength spacing of the channels is smaller and where in particular the shape of the transmission pass-band of the wavelength splitter at the input determines the shape of the transmission pass-bands for all outputs of the compound device. At the output side of the tree, where the wavelength channels are spaced far apart, a simple single stage Mach-Zehnder interferometer is sufficient to separate the wavelength channels.

The wavelength splitter at the input separates the even from the odd wavelength channels. The repetition period or Free Spectral Range (FSR) of this filter must therefore be set to twice the channel spacing $\delta\lambda$. The FSR of these Mach-Zehnder-like lattice filters is given by [9]:

$$FSR = \lambda^2 / n_{gr} \Delta L \tag{1}$$

where n_{gr} is the group index of the delay line waveguides and ΔL is the length difference between the long and the short waveguide arms. From this we can conclude that the base length difference for the input wavelength splitter is given by:

$$\Delta L_{Base} = \lambda^2 / 2\,\delta\lambda\, n_{gr} \tag{2}$$

However, it must be noted that this length difference sets the exact filter period, not the exact wavelength position of the pass-bands. These can be moved to the right position by slightly tuning ΔL_{Base} at the cost of a negligible detuning of the filter period.

Toward the output of the tree, the distance between the wavelength channels that must be separated doubles with every level of the binary tree and the FSR of the splitters must follow accordingly. Also, for some splitters, the filter curve center wavelength must be adjusted by a fraction of one FSR, depending on the channels that must be separated. A shift of one full FSR is achieved by adding a delay line length difference of:

$$\Delta L_{FS} = \lambda / n_{eff} \tag{3}$$

where n_{eff} is the effective index of the waveguide. The parameters that are used to calculate the delay line settings for all wavelength splitters are summarized in Table 1:

Table 1. Parameters for the calculation of the delay line lengths of the wavelength splitters in a Cascaded Mach-Zehnder wavelength filter

Splitter	ΔL_{FSR}	ΔL_{Shift}
3 st	ΔL_{Base}	0
2 st A	$\Delta L_{Base}/2$	0
2 st B	$\Delta L_{Base}/2$	0.75 ΔL_{FS}
1 st A	$\Delta L_{Base}/4$	0
1 st B	$\Delta L_{Base}/4$	0.25 ΔL_{FS}
1 st C	$\Delta L_{Base}/4$	0.125 ΔL_{FS}
1 st D	$\Delta L_{Base}/4$	0.375 ΔL_{FS}

The correct delay line setting for a wavelength splitter can be obtained from:

$$\Delta L = \Delta L_{FSR} + \Delta L_{Shift} \tag{4}$$

where the values for ΔL_{FSR} and ΔL_{Shift} can be looked up from Table 1 and ΔL_{Base} and ΔL_{FS} can then be traced back to basic waveguide parameters using Eqs. (2) and (3) respectively.

#186449 - $15.00 USD Received 5 Mar 2013; revised 18 Apr 2013; accepted 19 Apr 2013; published 6 May 2013
(C) 2013 OSA

2.2 Simulation

The theoretical transmission spectra for a complete 1-to-8 demultiplexer, with a channel spacing of 3.2 nm (400 GHz) and a center wavelength of 1490 nm, are shown in Fig. 3. Theses spectra were calculated using the mathematical model that we use to verify our physical designs. This model is based on transfer matrices and calculates the filter response based on the actual directional coupler and delay waveguide lengths. As in the physical device, the relative phases of the delay waveguides are obtained by making small adjustments to the delay waveguide lengths. The wavelength dependency of waveguide effective index and coupling coefficients are taken into account.

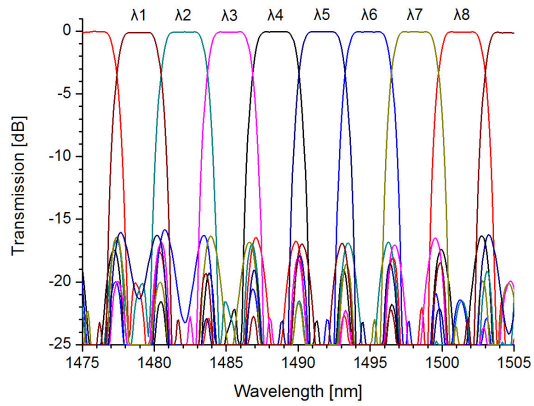

Fig. 3. Calculated transmission of a 1 to 8 demultiplexer based on a binary tree of Mach-Zehnder-like lattice filters.

The calculated transmission spectra show that the flat pass-bands span more than half of the channel spacing. In these pass-bands the loss of the passed channel is negligible and the crosstalk of the suppressed channels is below –20 dB. The larger side lobes between the pass-bands do not have an impact on the overall device performance as no signal is present in these spectral regions.

2.3 Phase error mitigation

The lattice filters that make up the Cascaded Mach-Zehnder demultiplexer contain eleven delay line sections, each consisting of a long and a short waveguide arm. Process variations can lead to width variations of these waveguides and consequently introduce phase errors in the delay lines. This could result in deterioration of the filter curves and/or an offset of the pass-bands from the designed wavelength. In these CMZ devices we have reduced the sensitivity to width variations by widening the waveguides in the delay arms [14], from the standard width of 500 nm to a width of 1.0 µm. In the widened waveguides, the sensitivity of the optical phase to width-variations is reduced by a factor of 5. This also makes the delay line waveguides multi-modal, but we use 10 µm long parabolic tapers to couple adiabatically between the multi-mode and mono-mode sections of the device to avoid excitation of the higher order modes. However, the adiabatic tapers increase the overall waveguide length, partially reducing the positive effect of the waveguide widening.

3. Device Implementation

The CMZ devices were fabricated in silicon-on-insulator (SOI) technology using the IBM CMOS Silicon Nanophotonics process [15,16]. This process results in waveguides with a nominal width of 500 nm and a thickness of 200 nm, on a buried oxide (BOX) layer of 2 µm thick and clad by silicon oxide as well. In the directional coupler sections, two of these waveguides are placed side by side with a gap of 250 nm, resulting in a cross-coupling length of 66 µm. A micrograph of a completed CMZ demultiplexer with widened optical delay lines

#186449 - $15.00 USD Received 5 Mar 2013; revised 18 Apr 2013; accepted 19 Apr 2013; published 6 May 2013
(C) 2013 OSA

is shown in Fig. 4. This device has been designed for a center wavelength of 1490 nm and for TE polarized light. The device size is approximately 500 × 400 µm.

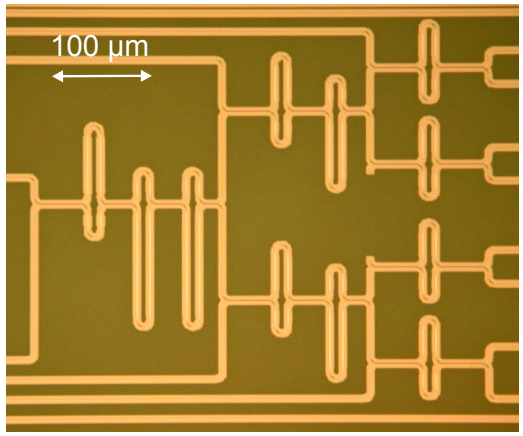

Fig. 4. Micrograph of a completed CMZ demultiplexer.

4. Device performance

Figure 5 shows the measured transmission spectra for a Cascaded Mach-Zehnder filter as shown in Fig. 4. These spectra were measured using a scanning tunable laser and normalized to the maximum transmission of an adjacent straight waveguide.

Channel wavelengths: The measured spectra show that the transmission channels of this device are shifted about 4.7 nm toward longer wavelengths, such that in the left part of the graph the transmission channels for a higher order, marked by a "+1" superscript, have become visible. This shift is due to a higher than expected effective index of the delay line waveguides, resulting from a thicker than expected silicon layer. We believe that this problem is partly due to non-uniformity of the used SOI wafers, which could probably be solved by using wafers with better SOI thickness uniformity. Also, the simulation model is not yet optimally calibrated to the production line.

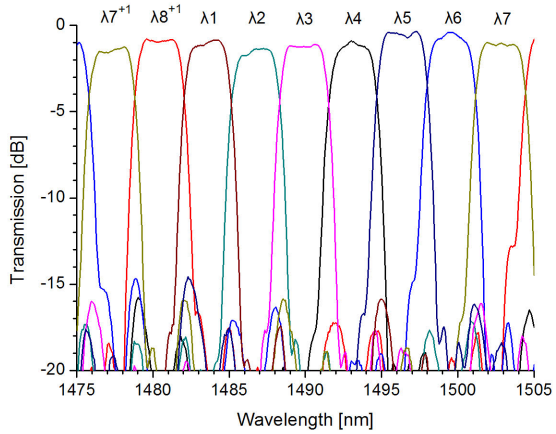

Fig. 5. Measured transmission curves of a CMZ demultiplexer, normalized to the maximum transmission of a straight waveguide.

Flat pass-band: For all of the 8 output channels of the demultiplexer, the transmission pass-band is flat within 0.7 dB over a wavelength range of 2.4 nm. The degradation of the

#186449 - $15.00 USD Received 5 Mar 2013; revised 18 Apr 2013; accepted 19 Apr 2013; published 6 May 2013
(C) 2013 OSA

spectral flatness of the pass-bands is probably partly due to phase errors (see also the next paragraph), and partly due to spectral ripple in the measurement setup.

Extinction ratio: The extinction ratio of the suppressed wavelength channels is about 18 dB at the center wavelengths of the channels. At the extinction ratio level of 15 dB, the width of the stop-band of the suppressed channels is more than 1.9 nm, with the exception of two stop-bands that are slightly narrowed due to small side lobes on the adjacent transmission bands. From comparison with simulations, we found that these side lobes and some of the flatness degradation of the pass-bands can be explained well by a single phase error of $-0.1\ \Delta L_{FS}$ in the third delay line of the first wavelength splitter.

Insertion loss: The insertion loss of the transmission channels varies between 0.4 and 1.6 dB. This loss and its variation are probably due to scatter loss variations in the relatively long (1.5 mm) input and output waveguides and variations in out-coupling from the (cleaved) end-facets.

Thanks to the wide flat pass-band and the wide stop-bands with high extinction of the suppressed channels, the device can tolerate temperature variations of more than 25°C.

5. Discussion and Conclusions

In the results shown here, the presence of phase errors can be deduced from small side lobes besides the transmission peaks and from broadening of the lobes between the transmission channels. This limits the extinction ratio in these devices to ~15 dB. To increase the extinction ratio in future devices, the phase errors should be reduced by further design improvements that reduce the sensitivity to size variations of the waveguides or by reducing the variations by technology improvements in the Silicon Photonics process. In an alternative approach, the extinction ratio of the filters could be improved by doubling the number of filter stages for every wavelength channel [8]. We have successfully applied this approach before on a less challenging (de-)multiplexer design with four channels on 6.4 nm spacing [16].

The measurements clearly demonstrate the combination of low insertion loss, flat pass-band and small device size that can be achieved with the Cascaded Mach-Zehnder optical filter. When applied in Silicon Photonics WDM transceivers, the low loss minimizes the impact of these demultiplexers on the optical loss budget and the flat pass-band makes the transceivers tolerant to temperature variations. These features, combined with the small device size make this type of (de-)multiplexer well suited for application in WDM transceivers for optical data communication.

#186449 - $15.00 USD Received 5 Mar 2013; revised 18 Apr 2013; accepted 19 Apr 2013; published 6 May 2013
(C) 2013 OSA