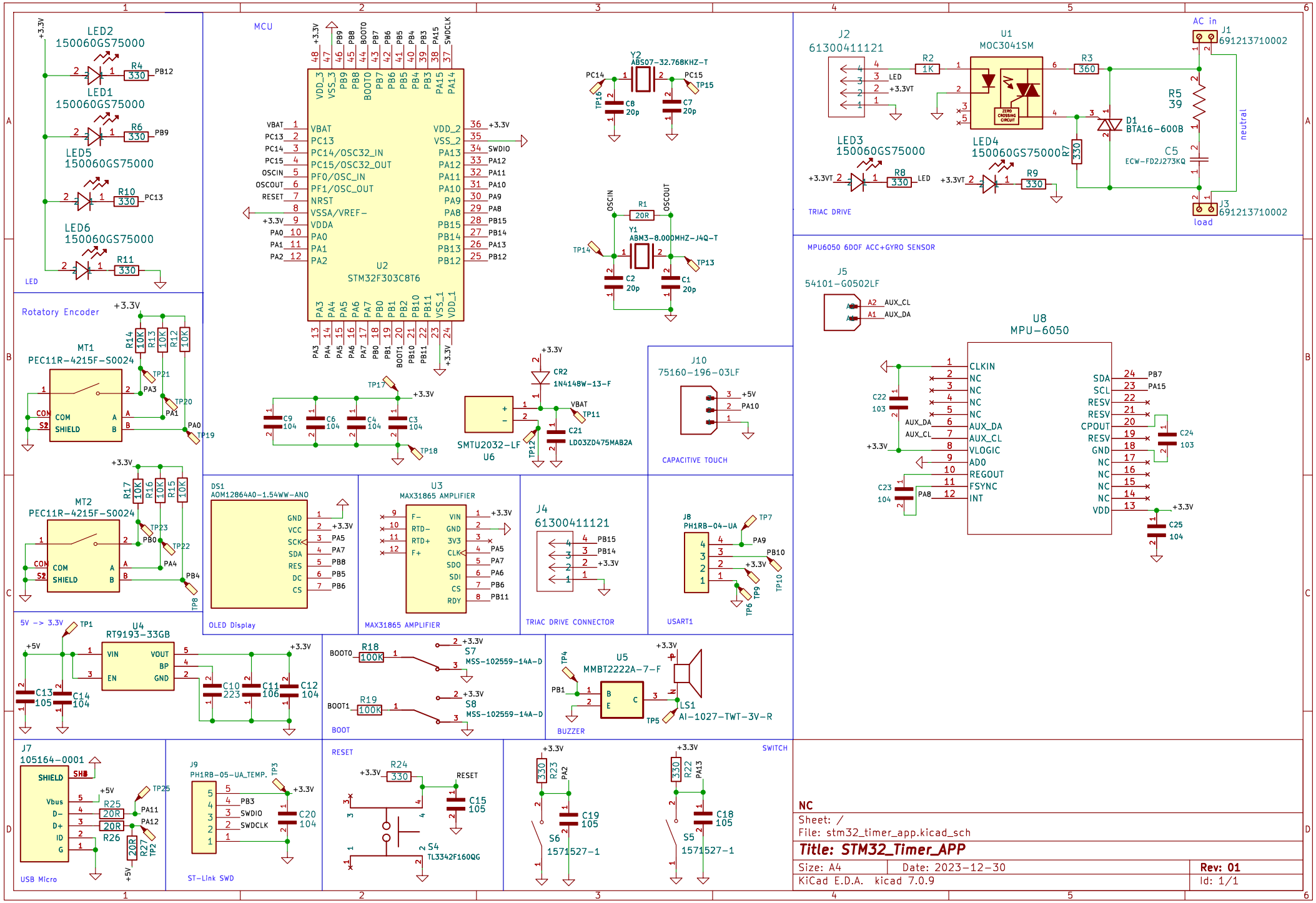
LED
LED2
150060GS75000
LED1
150060GS75000
LED5
150060GS75000
LED6
150060GS75000
R4 330 PB12
R6 330 PB9
R10 330 PC13
R11 330
MCU
U2
STM32F303C8T6
Y2
ABS07-32.768KHZ-T
C8 20p
C7 20p
Y1
ABM3-8.000MHZ-J4Q-T
R1 20R
C2 20p
C1 20p
Rotatory Encoder
MT1
PEC11R-4215F-S0024
MT2
PEC11R-4215F-S0024
R14 10K
R13 10K
R12 10K
R17 10K
R16 10K
R15 10K
C9 104
C6 104
C4 104
C3 104
CR2
1N4148W-13-F
SMTU2032-LF
U6
C21
LD03ZD475MAB2A
J10
75160-196-03LF
CAPACITIVE TOUCH
DS1
AOM12864A0-1.54WW-ANO
OLED Display
U3
MAX31865 AMPLIFIER
MAX31865 AMPLIFIER
J4
61300411121
TRIAC DRIVE CONNECTOR
J8
PH1RB-04-UA
USART1
5V -> 3.3V
U4
RT9193-33GB
C13 105
C14 104
C10 223
C11 106
C12 104
R18 100K
R19 100K
S7
MSS-102559-14A-D
S8
MSS-102559-14A-D
BOOT
U5
MMBT2222A-7-F
LS1
AI-1027-TWT-3V-R
BUZZER
J7
105164-0001
USB Micro
R25 20R
R26 20R
R27 20R
J9
PH1RB-05-UA_TEMP.
ST-Link SWD
C20 104
RESET
R24 330
C15 105
S4
TL3342F160QG
SWITCH
R23 330
C19 105
S6
1571527-1
R22 330
C18 105
S5
1571527-1
J2
61300411121
U1
MOC3041SM
R2 1K
R3 360
R7 330
D1
BTA16-600B
R5 39
C5
ECW-FD2J273KQ
LED3
150060GS75000
R8 330
LED4
150060GS75000
R9 330
TRIAC DRIVE
AC in
J1
691213710002
J3
691213710002
load
neutral
MPU6050 6DOF ACC+GYRO SENSOR
J5
54101-G0502LF
U8
MPU-6050
C22 103
C23 104
C24 103
C25 104
NC
Sheet: /
File: stm32_timer_app.kicad_sch
Title: STM32_Timer_APP
Size: A4
Date: 2023-12-30
Rev: 01
KiCad E.D.A. kicad 7.0.9
Id: 1/1