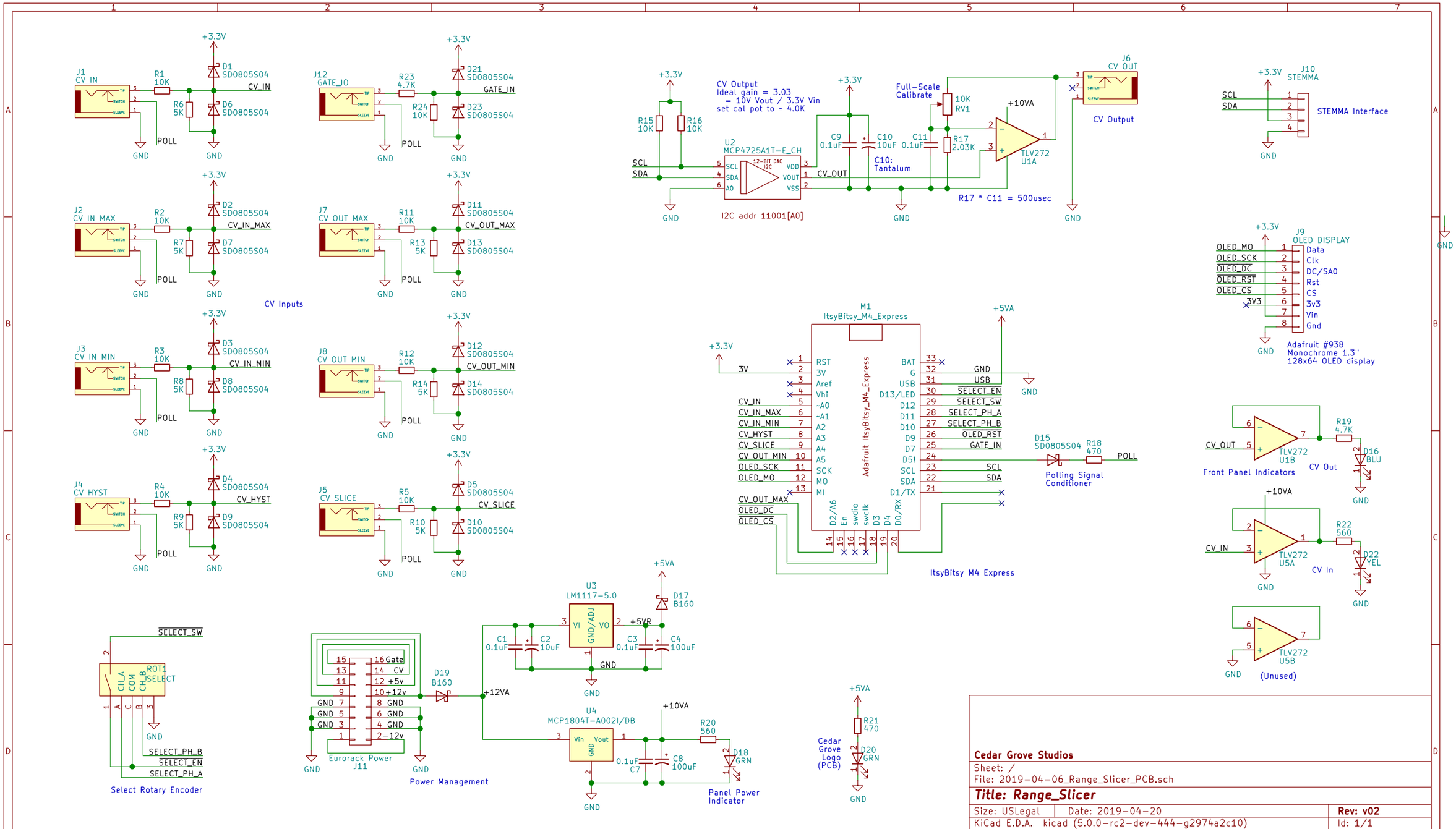
CV Inputs
J1 CV IN
J2 CV IN MAX
J3 CV IN MIN
J4 CV HYST
J12 GATE_IO
J7 CV OUT MAX
J8 CV OUT MIN
J5 CV SLICE
CV Output
Ideal gain = 3.03
= 10V Vout / 3.3V Vin
set cal pot to ~ 4.0K
U2 MCP4725A1T-E_CH
12-BIT DAC I2C
I2C addr 11001[A0]
Full-Scale Calibrate
RV1 10K
TLV272 U1A
R17 * C11 = 500usec
C10: Tantalum
J6 CV OUT
J10 STEMMA
STEMMA Interface
J9 OLED DISPLAY
Adafruit #938
Monochrome 1.3"
128x64 OLED display
M1 ItsyBitsy_M4_Express
Adafruit ItsyBitsy_M4_Express
ItsyBitsy M4 Express
D15 SD0805S04
R18 470
Polling Signal Conditioner
TLV272 U1B
Front Panel Indicators
CV Out
TLV272 U5A
CV In
TLV272 U5B
(Unused)
Select Rotary Encoder
Eurorack Power J11
Power Management
U3 LM1117-5.0
U4 MCP1804T-A002I/DB
Panel Power Indicator
Cedar Grove Logo (PCB)
Cedar Grove Studios
Sheet: /
File: 2019-04-06_Range_Slicer_PCB.sch
Title: Range_Slicer
Size: USLegal
Date: 2019-04-20
Rev: v02
KiCad E.D.A. kicad (5.0.0-rc2-dev-444-g2974a2c10)
Id: 1/1