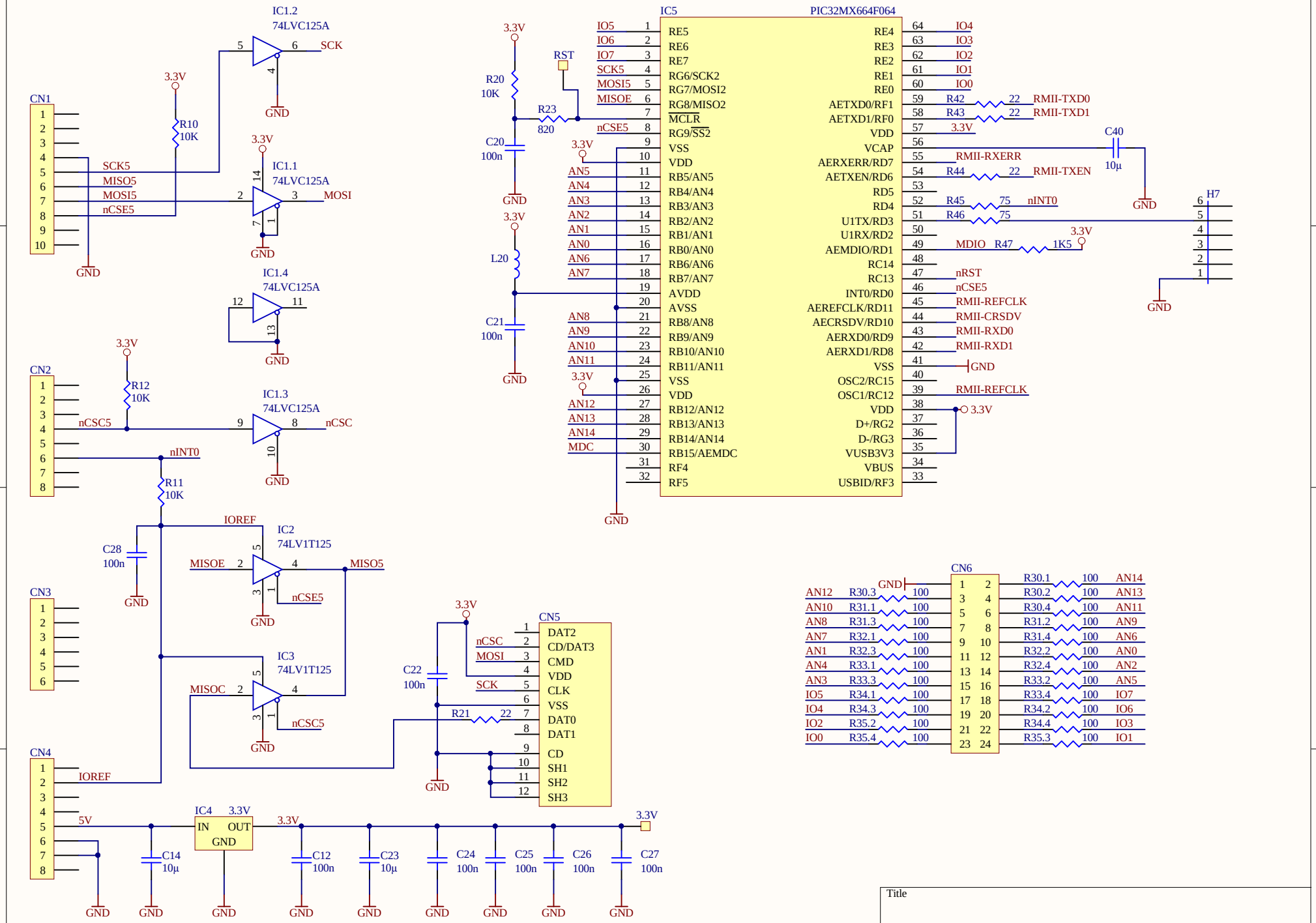

Title		
Size Letter	Number	Revision
Date: 2020-02-14		Sheet of
File: D:\Projects\..\main.SchDoc		Drawn By:

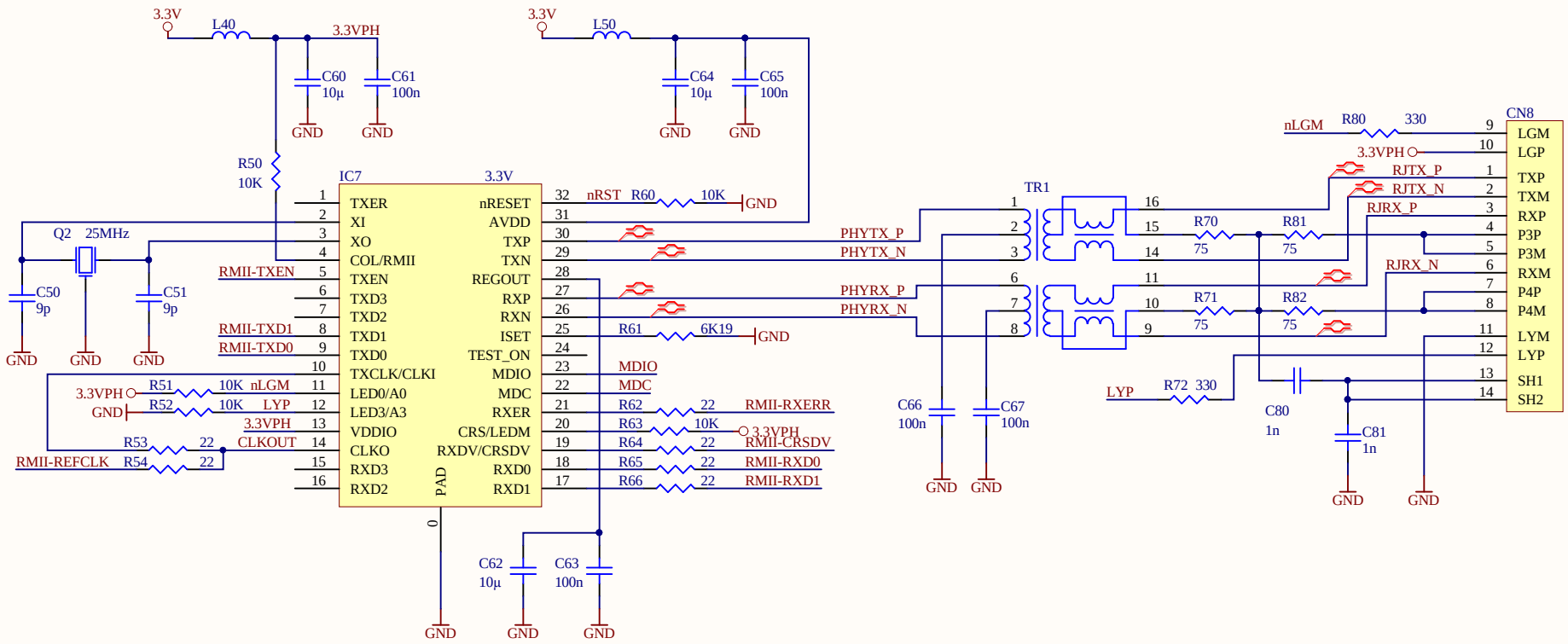

Title		
Size Letter	Number	Revision
Date: 2020-02-14		Sheet of
File: D:\Projects\..\phy.SchDoc		Drawn By: