UNIVERSITY
OF OSLO

# COCOTB
# Starting on the right foot

Yngve Hafting
Lecturer
Department of Informatics

2026-03-05

# *Cocotb cosimulation*
# How does timing work?

Cosimulation concept
Coroutines and Tasks
Event queue, Triggers and Timing

UNIVERSITY
OF OSLO

# Cosimulation concept

## Cocotb structure

- Cocotb uses ordinary VHDL simulation + a software testbench.
- Cocotb
  - is based on python
    - productive, lots of resources online
    - can interface other software...
  - Requires a single HDL top layer, *DUT*
    - *Can be a VHDL testbench...*
  - Both simulation code and synthesizable code is allowed
    - VHDL testbench code will run alongside python based tests
    - *Context switching* can be managed(…)
- Full simulation hierarchy can be accessed
  - *provided the simulator supports this* through VPI/VHPI/FLI

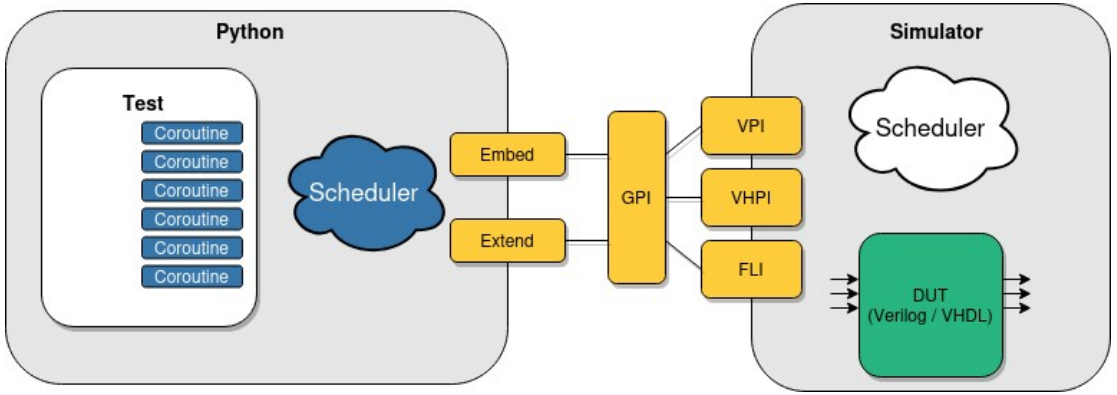


https://docs.cocotb.org/en/stable/

# Cosimulation concept

## Context switching

- When testbench (Python) code is run...
  - Simulation is stopped
- Communication through VPI/VHPI interfaces
  - represented by cocotb ”triggers”.
- When a trigger is awaited,
  - Simulation runs until triggered =>
    - tb resumes until next await.

- Python code is run in a *single thread*.
  - Multithreading *can* be used for other tasks (network interfaces etc)

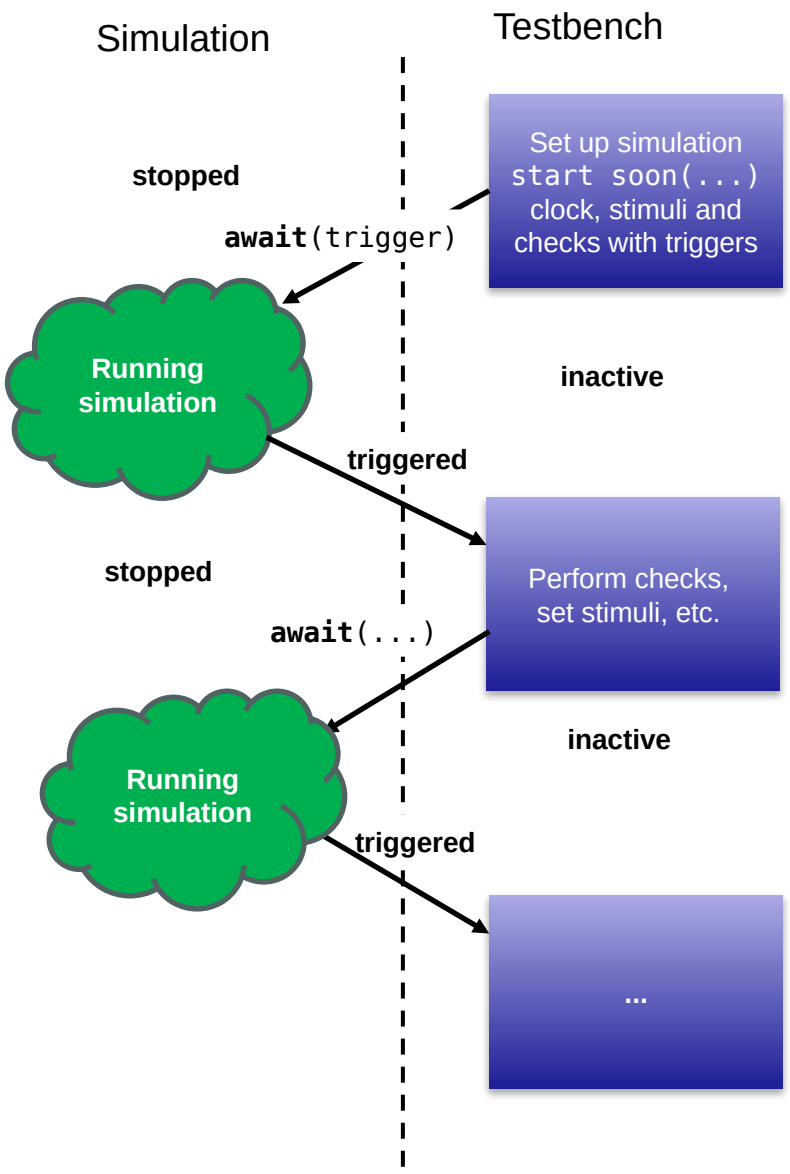

# Cosimulation concept

## Tasks and coroutines

- "*Coroutines are computer program components that must to be suspended and resumed, generalizing subroutines for cooperative multitasking*."
  https://en.wikipedia.org/wiki/Coroutine

- *"Tasks are cocotb objects that wrap coroutines and are used to schedule concurrent execution of the testbench coroutines.*"
  https://docs.cocotb.org/en/stable/coroutines.html

- Example next page

# Cosimulation concept

## Tasks and coroutines

- Coroutines are defined using **async def**
- Tasks can be
  - Scheduled using ***start_soon*** (*non blocking*)
  - **kill**ed (*requires task object*)
  - ***await***ed (*blocking*)
- Using **await**, the coroutine suspends (waits for simulator)
- *Only coroutines can use **await***
- *All methods can schedule tasks* using **start_soon**()
- *Tasks that are not awaited will end when simulation finishes*

```
# Coroutine example
async def my_coro(dut)
  await dut.signal.value_change
  <do something>

...
# Non blocking execution
TaskA = start_soon(my_coro(dut))

...
# Optional termination of tasks
TaskA.kill()

...
#Blocking execution
await my_coro(dut)

...
```

```
#Termination by coroutine
async def my_killcoro(myTask)
  await <something>
  myTask.kill()

TaskB = my_coro(dut)
start_soon(my_killcoro(TaskB))
await TaskB
...
```

# Cosimulation concept

## Event driven simulation and ReadOnly phase

- An event occurs in a time-step when a signal changes
  - All signals that depend on the signal is evaluated
    - Consequences are put in the event queue
    - With no timing information (RTL-simulation)
      - Output is queued at the same time-step
        - » A delay of 0 time is called a delta delay (δ)
  - All events in the queue for a time step is evaluated
    - Until there are no more changes left
      - => *"**ReadOnly**" phase in cocotb*
- The simulation proceeds to the next time-step when there are no more events to be evaluated
- Cocotb can be triggered by *any event* or *timeslot*
  - => *before, mid or after each queue...*

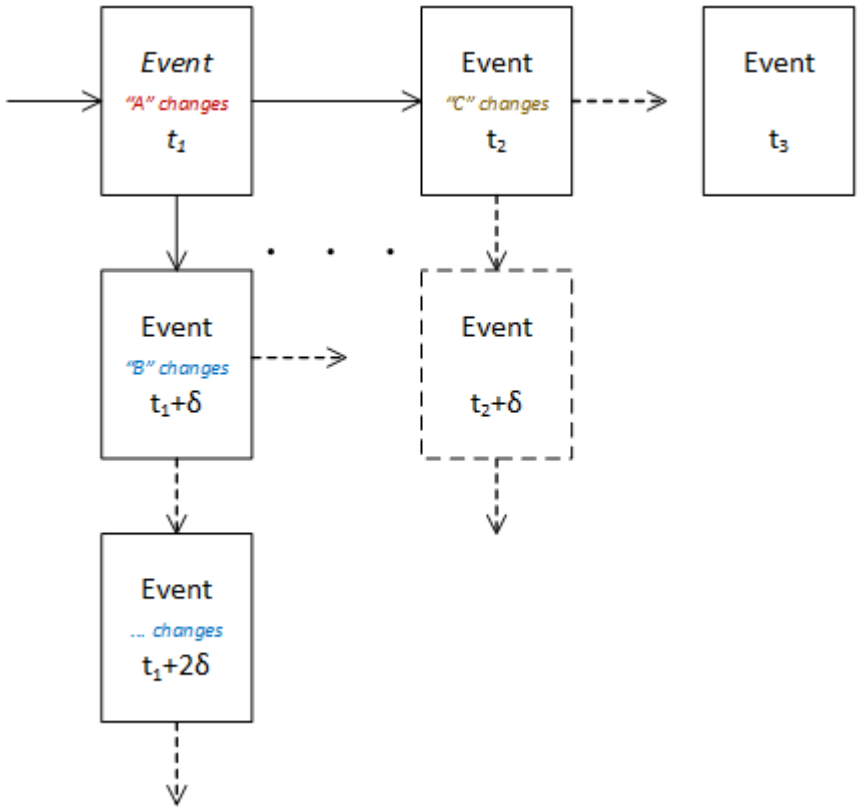

https://github.com/yngveha/seminars/tree/main/2026/inventas/delta

# Event queue example : Glitch
# Full code (also on github)

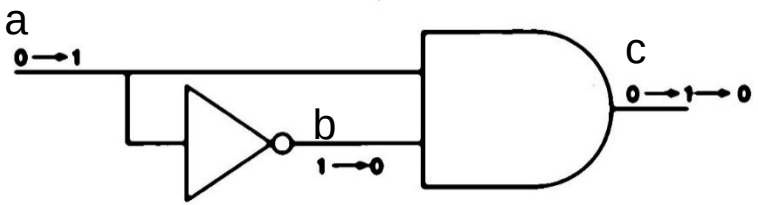


```python
library IEEE;
  use IEEE.std_logic_1164.all;


entity delta is
  port(
    a : in std_logic;
    c : out std_logic
  );
end entity delta;


architecture dataflow of delta is
  signal b : std_logic;
begin
  b <= not a;
  c <= b and a;
end architecture;
```

```python
import cocotb
from cocotb import start_soon
from cocotb.triggers import Edge, Timer, First
from cocotb.utils import get_sim_time

async def monitor(dut):
    while True:
        ta = dut.a.value_change
        tb = dut.b.value_change
        tc = dut.c.value_change
        await First(ta, tb, tc)
        print(f"{get_sim_time(units='ps'):{9}.0f}ps   ",
              f"a:{(dut.a.value)}   ",
              f"b:{(dut.b.value)}   ",
              f"c:{(dut.c.value)}")

@cocotb.test()
async def main_test(dut):
    dut.a.value = 0
    start_soon(monitor(dut))
    for i in range(5):
        await Timer(100, units='ps')
        dut.a.value = not dut.a.value
```

| | | | |
|---|---|---|---|
| 0ps | **a:0** | b:U | c:U |
| 0ps | a:0 | **b:1** | **c:0** |
| **100ps** | **a:1** | b:1 | c:0 |
| 100ps | a:1 | **b:0** | **c:1** |
| 100ps | a:1 | b:0 | **c:0** |
| **200ps** | **a:0** | b:0 | c:0 |
| 200ps | a:0 | **b:1** | **c:0** |
| **300ps** | **a:1** | b:1 | c:0 |
| 300ps | a:1 | **b:0** | **c:1** |
| 300ps | a:1 | b:0 | **c:0** |
| **400ps** | **a:0** | b:0 | c:0 |
| 400ps | a:0 | **b:1** | **c:0** |

# Waiting for ReadOnly()

```
  0ps     a:0     b:1     c:0
100ps     a:1     b:0     c:0
200ps     a:0     b:1     c:0
300ps     a:1     b:0     c:0
400ps     a:0     b:1     c:0
```

Glitches will typically not be shown in waveforms
*- unless post synthesis simulation*

```python
import cocotb
from cocotb import start_soon
from cocotb.triggers import Edge, Timer, First, ReadOnly
from cocotb.utils import get_sim_time

async def monitor(dut):
    while True:
        ta = dut.a.value_change # Edge(dut.a)
        tb = dut.b.value_change # Edge(dut.b)
        tc = dut.c.value_change # Edge(dut.c)
        await First(ta, tb, tc)
        await ReadOnly()
        print(f"{get_sim_time(units='ps'):{9}.0f}ps   ",
              f"a:{(dut.a.value)}   ",
              f"b:{(dut.b.value)}   ",
              f"c:{(dut.c.value)}")

@cocotb.test()
async def main_test(dut):
    dut.a.value = 0
    start_soon(monitor(dut))
    for i in range(5):
        await Timer(100, units='ps')
        dut.a.value = not dut.a.value
```

Source https://docs.cocotb.org/en/stable/triggers.html#

# Cocotb Triggers -- `await <trigger>`

**`ReadOnly()`**

Waits until all delta delays has settled

useful for *most* checks

**`ReadWrite()`**

Get out of ReadOnly phase

***NOTE**: can be a bit sketchy – will wait for next event, whenever that is.*

`<signal>.value_change #Edge(signal)` *Waits for any change in the signal*

`<signal>.rising_edge #RisingEdge(signal)`,

`<signal>.falling_edge #FallingEdge(signal)`

**`Timer(value, unit="ps")`**

Waits the exact simulation time

**`ClockCycles(signal, num_cycles, rising=True)`**

Waits a number of (rising) edges

**`First(*triggers)`**

Waits for the first trigger in the list

**`Combine(*triggers)`**

Waits for all triggers in the list

# How does cocotb use timing information?

## How do we define time steps and

- Three major ways of waiting timesteps:
  - `await Timer(..)`
  - `await <signal>.value_change, .rising_edge, .falling_edge`
  - `await Clockcycles(..)`
- Principles of simulation
  - Read goes before write
    - Assignment are put onto the event-queue which resolves "*later*".
    - Using the same timer values *(separate methods)* for read and assignment:
      - Assignment will happen later than read.
  - Cocotb.Clock uses Timer()
    - Clk values will never come before **await**ing Timer()
  - Clockcycles(..) uses rising_edge *(or falling_edge when specified)*
    - Clockcycles trigger is equivalent to waiting a number of .rising_edge (s)
- => It is possible to "fool" RTL simulation having signals assigned **before clock edges** at the same time (**Avoid this!**)...

# How does cocotb use timing information

```
x <= a when rising_edge(clk);
```

## Example

Similar/extended version on

https://github.com/yngveha/seminars/tree/main/2026/inventas/timing-test

- Look closely at the register (x) output-
  - How did we get there?

Expected register behavior

Timing looks flawed (!)

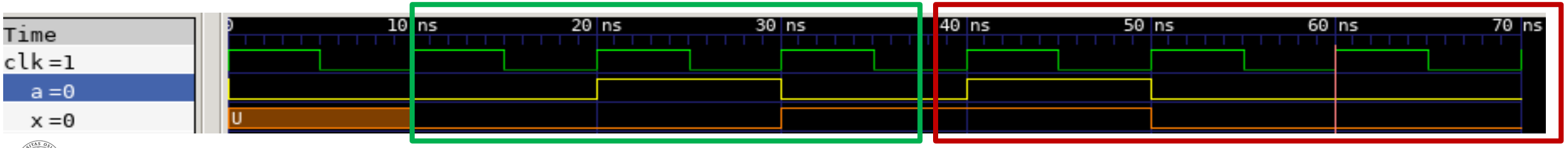

# How does cocotb use timing information

## Example

Slightly extended version on
https://github.com/yngveha/seminars/tree/main/2026/inventas/timing-test

```
x <= a when rising_edge(clk);
```

```
async def Astim(dut):
    await dut.clk.rising_edge   # 20ns
    dut.a.value = 1
    await Timer(10, units="ns") # 30 ns
    await dut.clk.rising_edge   # 30 ns
    dut.a.value = 0
    await Timer(10, units="ns") # 40 ns
    dut.a.value = 1
    await Timer(10, units="ns") # 50 ns
    dut.a.value = 0
```

- VHDL register uses `rising_edge(clk)`
- Stimuli is set using `clk.rising_edge` and `Timer()`
- Values are provided using `Timer()`, `clk.rising_edge` *and* `Readonly()` :

```
20.0ns Awaited RisingEdge, A<=1 after clock        A: 0, x:0 Rising_edge => within the event queue
20.0ns Awaited Readonly()                          A: 1, x:0 Readonly => event queue end for the current time
30.0ns Awaited 10ns Timer, A<=0 after clock        A: 1, x:0 Timer => beginning of event queue
30.0ns Awaited RisingEdge                          A: 1, x:0 OK, 30 ns means we are in the middle of the event queue
30.0ns Awaited Readonly()                          A: 0, x:1 Readonly -> event queue has settled
40.0ns Awaited 10ns Timer, A<='1' after Timed 10ns A: 0, x:1 As expected, set using timer goes after read using timer
40.0ns Awaited ClockCycle (=Rising edge)           A: 1, x:1 Waiting a clock cycle only waits for rising edge
40.0ns After Readonly()                            A: 1, x:1 x should be 0 but isn't because A was ready before clock
50.0ns Awaited 10ns Timer, A<='0' after Timed 10ns A: 1, x:1 ...
50.0ns Awaited ClockCycle                          A: 0, x:1 ...
50.0ns After Readonly()                            A: 0, x:0 ...
```

Expected register behavior

Simulation looks flawed (!)

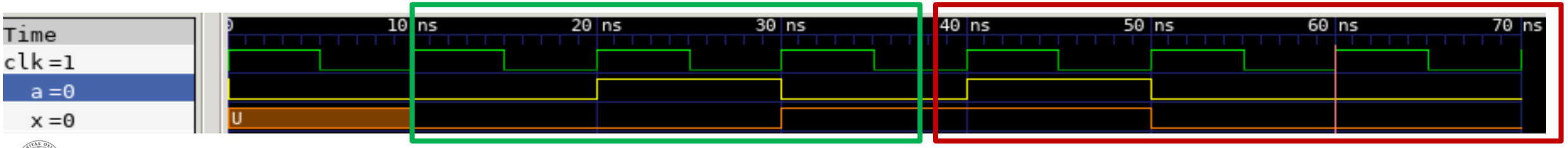

# Timing information in cocotb

## Summary for safe use

- Timer intercepts simulation before the event queue *at that timestep*
- *Reading goes before assignment*
- To achieve consistent, comprehensible results:
  - ***Apply stimuli after*** *either*
    - `await Clockcycles(dut.clk, #cycles)` *or* `await dut.clk.rising_edge`
  - **Apply checks triggered by**
    - `await <signal>.rising_edge/.falling_edge/.value_change` *followed by*
    - `await ReadOnly()`
  - Apply Timer *only when clock is irrelevant*
    - testing CL or timout conditions
    - Using Timer + `await ReadOnly()` will work, *but*
      - *hardcoding timing is rarely a good for scaleability*
- Timer based stimuli may lead to confusing waveforms
  - *Ad hoc solution :* Having Stimuli delayed compared to clock
    - *Scales poorly;* changing clock period may void testbench
  - *Shifting between timer and Clock relation will lead to inconsistencies*

# *Cocotb cosimulation*
# Readability, verifiability and modifiability - Easily organized?

Called and triggered checks
Queues for data management

# Making use of cocotb

## Called versus triggered checks

- Called checks

```
for data in stimulidata:
    set_stimuli(data)
    called_check(data)
```

- Must be remembered for every usecase
  - Code coverage ≠ data coverage
- Ties check to specific stimuli and timing
  - *Maintainability can be an issue.*
- Very little data management required

- Triggered checks

```
while True:
    await(trigger)
    model_data = stimuli_queue.get()
    assert dut.data.value = model_data
```

- Always on - *at least through test phase…*
- Independent of stimuli
  - *Function can be verified any time (FIAT friendly)*
- Only tied to test specification
  - Easier to maintain
- Requires data management
  - *= Easy using python queues*

# Example testbench - Sensor data interface

## Testbench featuring independent stimuli and checks

- Applies predefined test patterns
  - *Showcases randomized order of execution*
- Both stimuli and checks are triggered
- A queue is used for passing data internally

- https://github.com/yngveha/seminars/tree/main/2026/inventas/unispi_extended

- Show testbench structure
  - *makefile and vhdl is secondary*
- Run test

UNIVERSITY
OF OSLO